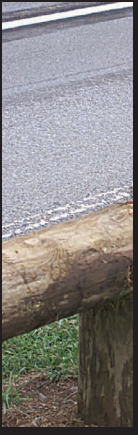

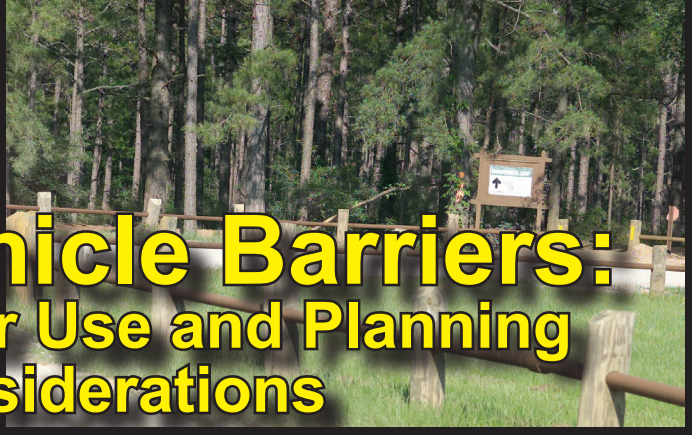

US Department of Agriculture

Forest Service

National Technology & Development Program

2300—Recreation Mgmt
0623 1201—SDTDC
June 2006

Vehicle Barriers: Their Use and Planning Considerations

Vehicle Barriers: Their Use and Planning Considerations

Ellen Eubanks, Landscape Architect

USDA Forest Service
San Dimas Technology and Develoment Center
San Dimas, CA 91773-3198

June 2006

Information contained in this document has been developed for the guidance of employees of the U.S. Department of Agriculture (USDA) Forest Service, its contractors, and cooperating Federal and State agencies. The USDA Forest Service assumes no responsibility for the interpretation or use of this information by other than its own employees. The use of trade, firm, or corporation names is for the information and convenience of the reader. Such use does not constitute an official evaluation, conclusion, recommendation, endorsement, or approval of any product or service to the exclusion of others that may be suitable.

The U.S. Department of Agriculture (USDA) prohibits discrimination in all its programs and activities on the basis of race, color, national origin, age, disability, and where applicable, sex, marital status, familial status, parental status, religion, sexual orientation, genetic information, political beliefs, reprisal, or because all or part of an individual's income is derived from any public assistance program. (Not all prohibited bases apply to all programs.) Persons with disabilities who require alternative means for communication of program information (Braille, large print, audiotape, etc.) should contact USDA's TARGET Center at (202) 720-2600 (voice and TDD). To file a complaint of discrimination, write USDA, Director, Office of Civil Rights, 1400 Independence Avenue, S.W., Washington, D.C. 20250-9410, or call (800) 795-3272 (voice) or (202) 720-6382 (TDD). USDA is an equal opportunity provider and employer.

Table of Contents

FORWARD 1
INTRODUCTION 1
GENERAL DISCUSSION 2
Barrier Types
Bollards 3
Fences 4
Gates 6
Large Rocks 9
Wooden Guardrails 9
Construction Drawings
Bollards 11
Fences 17
Gates 23
Guardrails 49
Large Rocks 65
DEFINITIONS 68
WEB SITES 69
Acknowledgements 69
APPENDIX A
Trail OHV-Width Limiter Gate and Nonmotorizd Trail Barriers 70
APPENDIX B
Object and Barrier Markers on OHV routes 73

FORWARD

This publication discusses vehicle barrier types, appropriate uses, and planning considerations. All barrier construction drawings are in the document, other full sized drawings are on the U.S. Department of Agriculture (USDA) Forest Service, San Dimas Technology and Development Center (SDTDC) Intranet site:

http://fsweb.sdtdc.wo.fs.fed.us/.

These barriers do not take the place of highway vehicle barriers or safety barriers on roads.

Use the vehicle barriers described in this publication at forest and grassland trailheads, picnic areas, and campgrounds, and at other facilities where vehicle control is needed to protect natural resources and amenities. This publication is written for designers, managers, recreation and engineering staffs, trail maintenance crews, and organized volunteer trail crews.

During the planning stage—and before installing a barrier—consult the Manual on Uniform Traffic Devices; FSH 7709.59, Chapter 10, Transportation System Operations Handbook, the off-highway vehicle (OHV) policy; and EM-7100-15, Sign and Poster Guidelines for the Forest Service for proper signing (travel management signs) and safety requirements for barriers. (See appendix B.) Also, use these USDA Forest Service and U.S. Department of Transportation, Federal Highway Administration Web sites:

http://mutcd.fhwa.dot.gov/,
http://fsweb.wo.fs.fed.us/eng/programs/signs.htm
(see pages 11 through 15 for specifics on using “Road Closed” signs),
http://fsweb.mtdc.wo.fs.fed.us/php/library_card.php?p_num=0371%202812,
and
http://fsweb.r1.fs.fed.us/e/access_and_travel_mgmt/atm_index.shtml.
(Scroll down to Field Implementation, click on ATM Signing.)

INTRODUCTION

Each year a greater number of visitors in vehicles use the national forests and grasslands, which increases the need for vehicle barriers. Barriers are one way to define vehicle access and to restrict vehicle encroachment. The degree to which barriers block vehicles varies (figures 1 and 2).

Figure 1. Telephone pole guardrail.

Figure 2. Steel framed width-limiter gate. This gate allows certain width vehicles through.

GENERAL DISCUSSION

Barrier design depends on an area's intended use (for example, OHV use or day use for picnicking); the area's native materials; the Recreation Opportunity Spectrum (ROS) classification; and the Built Environment Image Guide (BEIG) character type (see Definitions on page 76). Designers and site managers decide appropriate materials and placement of barriers.

Consider vandalism as a factor in barrier planning. Generally, wooden barriers are more at risk because wood is used for campfires or carving projects. Concrete barriers, although more durable, easily succumb to vehicle ramming or chipping from sledge hammers. Often metal is used as the rail portion of a barrier and is at risk from vehicle ramming, too.

Some barriers keep vehicles within defined spaces such as on a road, within a spur, or in a specific parking area. (See figure 3.) Others are meant to deter access to a road or trail. Most visitors recognize and respond to clues and design features such as a simple curb. Use curbs to deter the majority of visitors from driving off-road. Curbs made of concrete or asphalt fit urban or rural ROS classifications while logs, native rock and stones, or mounded dirt act as curbs in less developed ROS classifications. (See figures 4 and 5.)

Figure 3. These 4- by 4-inch timbers are wheel stops that indicate parking spaces.

Figure 4. An extruded curb in a highly developed recreation site.

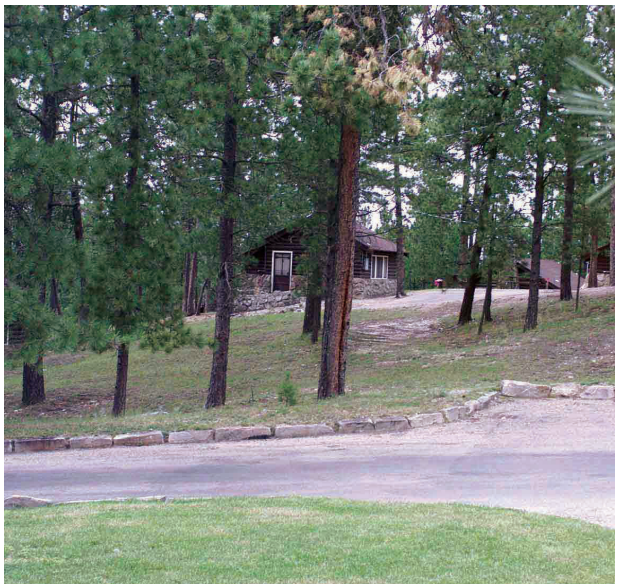

Figure 5. This rustic curb outlines a road.

Plan for the strongest barriers in areas where there have been vehicle control problems and, in some cases, fabricate specialized barriers for the vehicle type one is trying to control. (See figures 6 through 8.) In general, the larger the vehicle and the more aggressive the driver, the stronger the barrier needs to be. To make barriers more difficult to remove, use:

- Steel instead of wood.
- Small boulders.
- Larger diameter posts.
- Posts buried deeper.
- Posts set in concrete.
- Posts anchored with rebar spikes.

Figure 6. This wood post and rail fence surrounds a picnic area.

Figure 7. This width-limiter gate not only establishes the vehicle size that can be on the trail, it also marks the forest boundary.

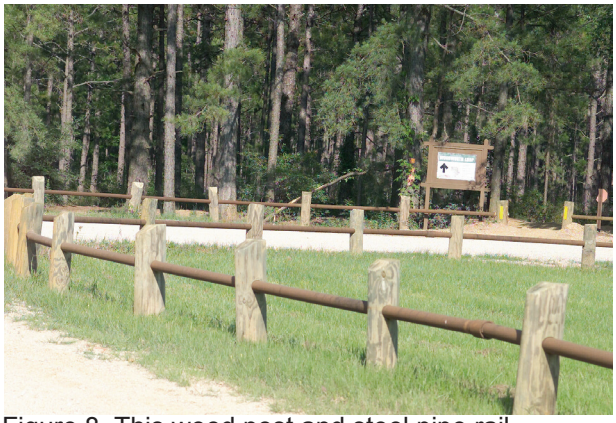

Figure 8. This wood post and steel pipe rail fence keeps motorcycles and ATVs on the road and off the grass. Note the trail entrance in the background.

To anchor a 3- to 6-inch-diameter post, insert a rebar spike (longer than the post is wide) through the post near its bottom edge and set the post in concrete. If an area has small-diameter trees, use two or three posts together to form a stronger post rather than one large post that is out of scale for the area.

Barrier Types

Generally, barriers are divided into five types: bollards, fences, gates, large rocks, and wooden guard-rails. The barrier size and its material(s) vary depending on the problem's severity and the proper scale to fit with the site's resources. Combine materials. For example, use a wooden post and a steel rail or plastic lumber made of recycled plastic. The U.S. Department of the Interior's Yosemite National Park uses plastic lumber posts with wooden rails.

Bollards

A bollard is a large post with no stringer or rail, commonly 1- to 4-feet tall, and used singly or grouped. (See figures 9 through 11.)

Figure 9. Bollards define the site's edge and separate the road and the parking lot.

Figure 10. Bollards outline the roadway, spurs, and campsite areas.

Figure 11. Bollards keep vehicles away from the restroom.

Purpose: Bollards block vehicle entry.

How to use: Use bollards to define edges such as the edge of a campground road, parking lot, or pedestrian entrance. When bollards define a pedestrian entrance, space them 32 inches apart to allow pedestrian and wheelchair passage; when they define a boundary, space close together.

Where to use: Use at developed sites with urban and rural ROS classifications.

Materials: Make bollards out of wood, concrete, steel, or plastic lumber posts.

Construction techniques: Follow instructions for a fence post.

Fences

A fence is a structure functioning as a boundary or barrier, usually made of posts, boards, wire, or rails.

Purpose: Fences keep people and stock in or out of an area. Fences are not designed to withstand vehicular impact.

How to use: Combine fences with a curb, bumper stop, wheel stop, or shrubbery to prevent vehicle intrusion.

Where to use: Use fences for developed sites with urban, rural, and roaded natural ROS classifications. In wide-open spaces, use fences to line roads and trails to protect pastures and natural resources.

Materials: Use wood, metal, or plastic lumber in developed sites. On range lands, a wooden post or steel t-post and wire fence is common. Openings between the wire strands of the fence allow small animals to go through the fence. A fieldstone wall—or rock fence—is appropriate in all ROS classifications, if the rock is local.

Construction techniques: Pound steel t-posts into the ground or dig in a wooden post. String with wire or barbed wire (depending on animal type) and use a come-along to tighten the wire strands. See figures 12 through 15. The following Web site has wire-fence details:

http://www.de.nrcs.usda.gov/technical/technical_references/engineering/eng_drawings.html

This Web site has information on fieldstone fences

http://www.dswa.org.uk/Publication_frames_page.htm.

Note: If the fence spans a stream or dry wash, use a three-strand wire fence to ensure passage of floodwater and debris.

Figure 12. Wooden and steel t-post wire fence.

Figure 13. Wooden fence with two strands of barbed wire.

Figure 14. Double post stacked rail fence.

Figure 15. This low wall is held together with mortar; it is similar to using fieldstones to build a rock fence

Barrier Types

Gates

Gates allow passage; they may or may not swing open. (See figure 16.) Secure gates to a fence or a substantial natural feature to prevent people from driving around them.

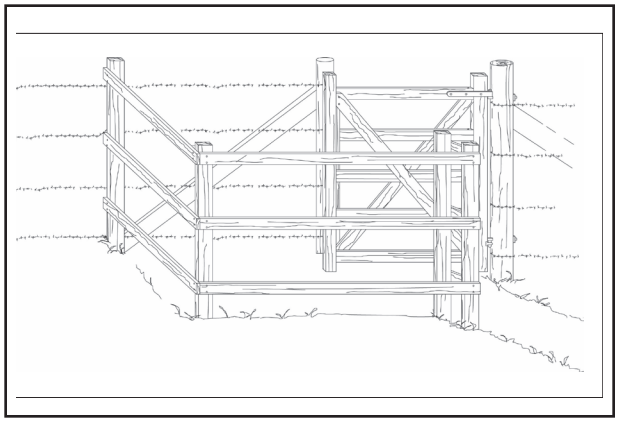

Figure 16. Schematic of kissing gate—designed to allow wheelchair access while blocking ATV access.

Accessible Kissing Gates

Purpose: The accessible kissing gate has two openings: a swing gate secures one opening while a person passes through the other. This gate allows wheelchair access and blocks motor vehicle access, including all-terrain vehicles (ATVs).

How to use: Use for pedestrian and wheelchair access, while blocking stock, motorcycle, and ATV access.

Where to use: Use at an accessible site. This gate requires flat ground, an area at least 7-1/2-feet square for the gate, and an additional area for entry and exit paths.

Materials: Build the kissing gate out of wood or steel.

Construction techniques: See construction drawings and the USDA Forest Service Missoula Technology and Development Center's 2006 publication *Accessible Gates for Trails and Roads* by James "Scott" Groenier.

http://fsweb.mtdc.wo.fs.fed.us/

Right-angle Gates

Purpose: A right-angle gate creates a passageway for pedestrians and stock. (See figures 17 and 18.)

Figure 17. This wooden fence includes two right angle turns. The width of the opening is a maximum of 32 inches (nonaccessible).

Figure 18. This gate has a single right angle turn and may not be as effective at keeping motorcycles out of an area.

How to use:

- Use a u-turn opening with two right-angle turns, which prevent motorized vehicle entry. A vehicle is blocked because the vehicle is either too wide or too long to make the right-angle turns required for passage. This is not an accessible gate.
- Use a one right-angle turn opening to keep out vehicles. This is not as effective as a u-turn pattern.

Where to use: Use where motorized vehicles are prohibited.

Materials: Use wood, steel, or a combination of both.

Construction techniques: Use wooden or steel posts with wooden or pipe rails. See construction drawings.

Steel Road Gates

Purpose: Steel road gates prevent vehicle entry to roads, trails, and other closed areas, such as administrative roads and campgrounds. (See figures 19 and 20.)

Figure 19. Standard Angeles National Forest road gate. Note that large rocks and berms have been placed to block entry around the gate.

Figure 20. This double gate is used at an OHV area.

How to use: Close and lock the gate.

Where to use: Use at the entrance to a road or facility.

Materials: Use steel pipe to form posts and steel guardrail material or pipe to form the rails. Attach a travel management sign.

Construction techniques: See construction drawings.

Steel Trail Gates

1. Width-Limiter Gate

Purpose: This gate prevents certain width vehicles from entering. (See figure 21.)

Figure 21. This width-limiter gate is used at trailheads to block certain vehicle types and to allow access by other types. A cross-bar is in place to close the trail to all uses.

How to use: Use this gate to limit the access of four-wheel drive vehicles and ATVs while allowing motorcycle access. (The 27-inch gate is not accessible.)

Where to use: Use at the entrance to a trail or facility. This gate needs to be visible at the trailhead and as one approaches while riding. For safety reasons, do not let the gate completely blend in or disappear into the landscape. On the other hand, do not let it be a focal point from a distance.

Materials: Use steel pipes or used steel well casings.

Construction techniques: See written fabrication instructions, and construction drawings.

2. Nonmotorized Trail Barrier (Stock) Gate
Purpose: This gate allows stock and pedestrians on trails. (See figures 22 through 25.) This gate is not accessible.

Figure 22. This nonmotorized trail barrier gate allows pedestrians and stock to pass through. The gate is flanked by a steel rail fence to prevent people from skirting the gate.

Figure 23. This nonmotorized trail barrier gate is shown with the upper bar closed, closing the trail to all traffic. A wire fence is attached to the gate to prevent people from skirting the gate.

Figures 24 and 25. A barbed wire fence is strung through the holes on the flange on the side of the post. This prevents people from skirting the gate.

How to use: Use at trail entry. Motorized vehicle entry is impossible without heavy weight lifting (vehicle) or destruction of property (government).

Where to use: Use at the entrance to a trail or facility and where trail use designation changes. Tie gates to a fence or a substantial natural feature to prevent people from driving around them.

Materials: Use steel pipes that will withstand vehicle and equestrian bumps.

Construction techniques: See photographs, construction drawings, and narrative in appendix A.

Large Rocks

Rocks are difficult to drive over in a standard automobile and most drivers would not try. However, OHV users may view the rocks as a challenge. (See figure 26.)

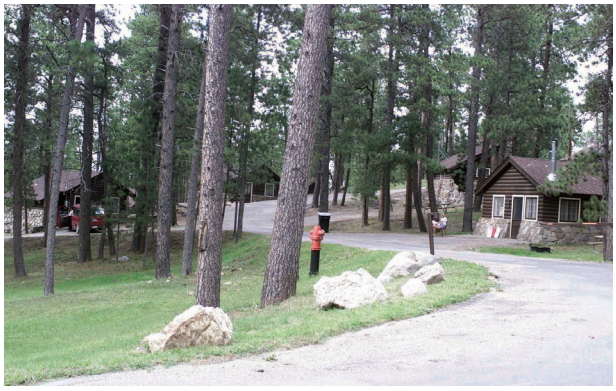

Figure 26. These grouped rocks were placed to protect a fire hydrant.

Purpose: Large rocks prevent people from parking off the pavement and keep drivers within designated parking areas. Rocks block entry to decommissioned roads and trails.

How to use: Mimic nature by planting rocks in clusters of one to five and varying space between the rocks and the clusters. End a cluster of rocks where there is sufficient vegetation to prohibit vehicle entry.

Where to use: Use where large rocks occur naturally. If large rocks are not common, do not use them; they will appear out of place.

Materials: Use barrier rocks that weigh 200 to 400 pounds each.

Construction techniques: Bury one-third of the rock for stability, anchoring, and a more natural look. See drawings.

Wooden Guardrails

Wooden guardrails are a series of low posts tied together by wooden rails.

Purpose: Guardrails block and control vehicular access. (See figures 27 and 28.)

Figure 27. This guardrail delineates a parking lot.

Figure 28. Close up view.

How to use: Combine guardrails with a curb, bumper stop, wheel stop, or shrubbery to increase effectiveness against vehicle intrusion.

Where to use: Use them to line roads or areas, such as trailheads or turnouts, in urban and rural ROS classifications, and in limited areas in a roaded natural ROS classification.

Materials: Combine materials, such as concrete posts and wooden rails.

Construction techniques: See photographs and construction drawings, which include a no-dig barrier.

Construction Drawings

The following drawings show many different barriers. Some were described previously, others were not. The drawings are divided into five types: bollards, fences, gates, large rocks, and wooden guardrails.

BOLLARDS

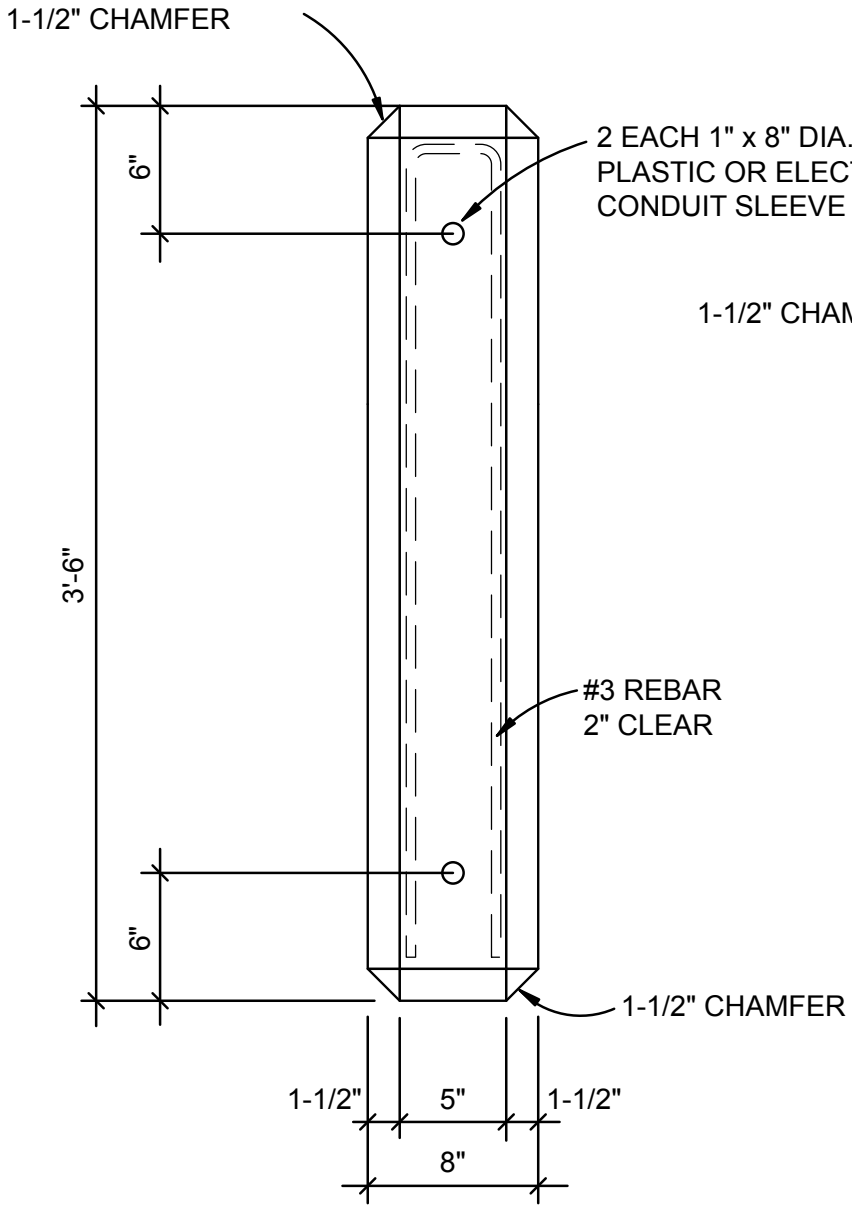

ELEVATION

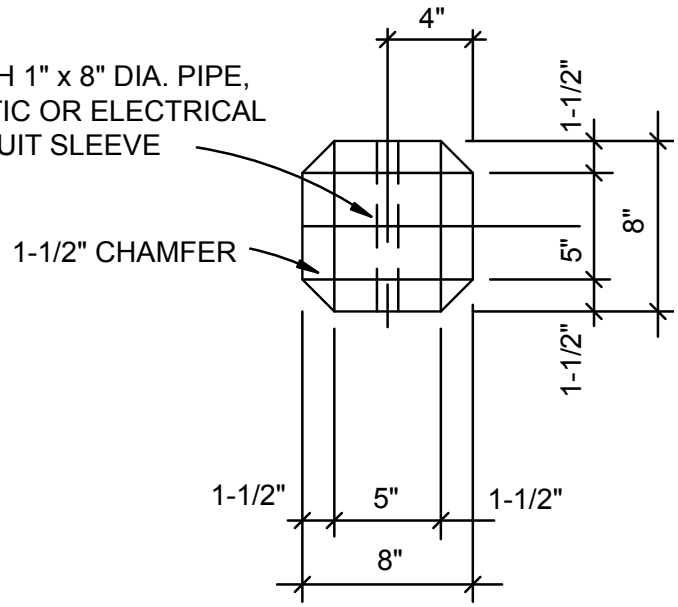

PLAN

PRECAST CONCRETE POST

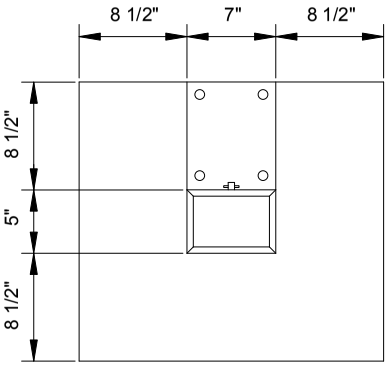

PLAN

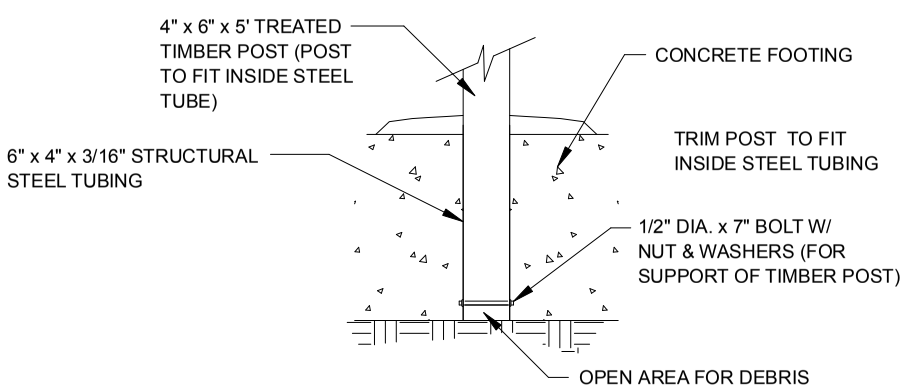

STEEL SLEEVE DETAIL

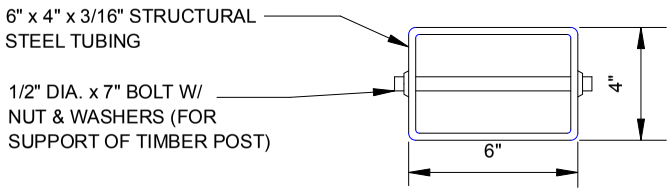

STEEL TUBE DETAIL

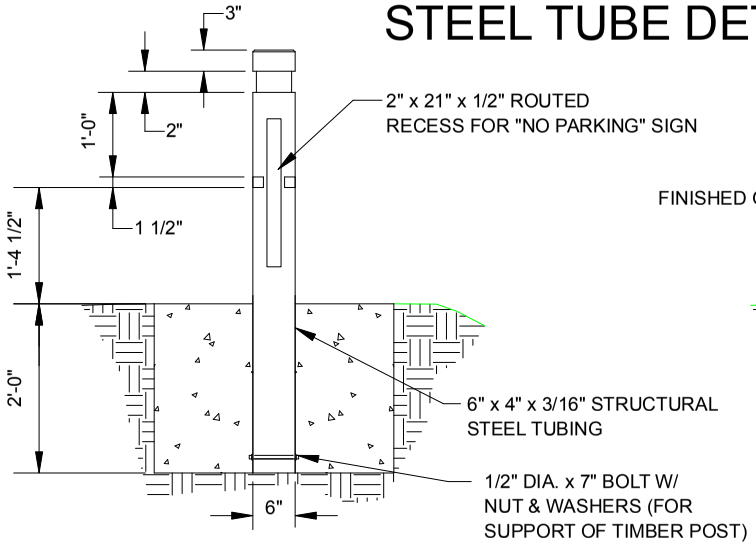

FRONT ELEVATION

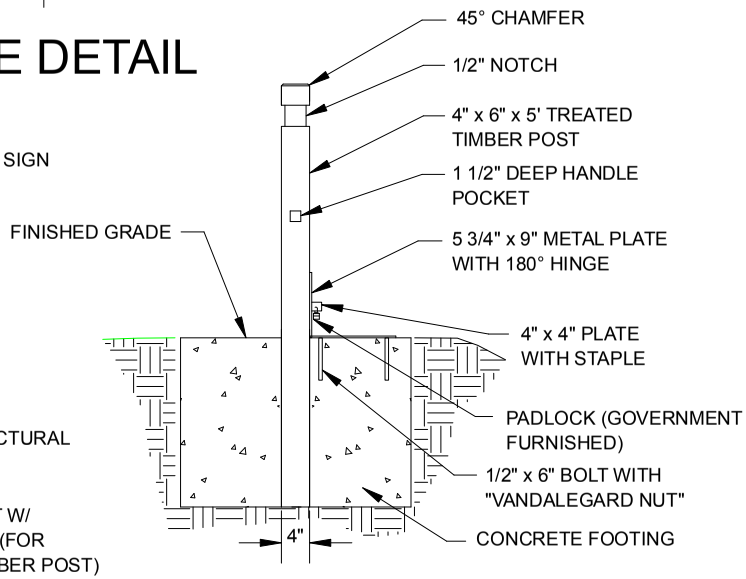

SIDE ELEVATION

NOTES:

1. PLACE POST BARRIERS 2'-0" MINIMUM FROM EDGE OF TRAVELWAYS.

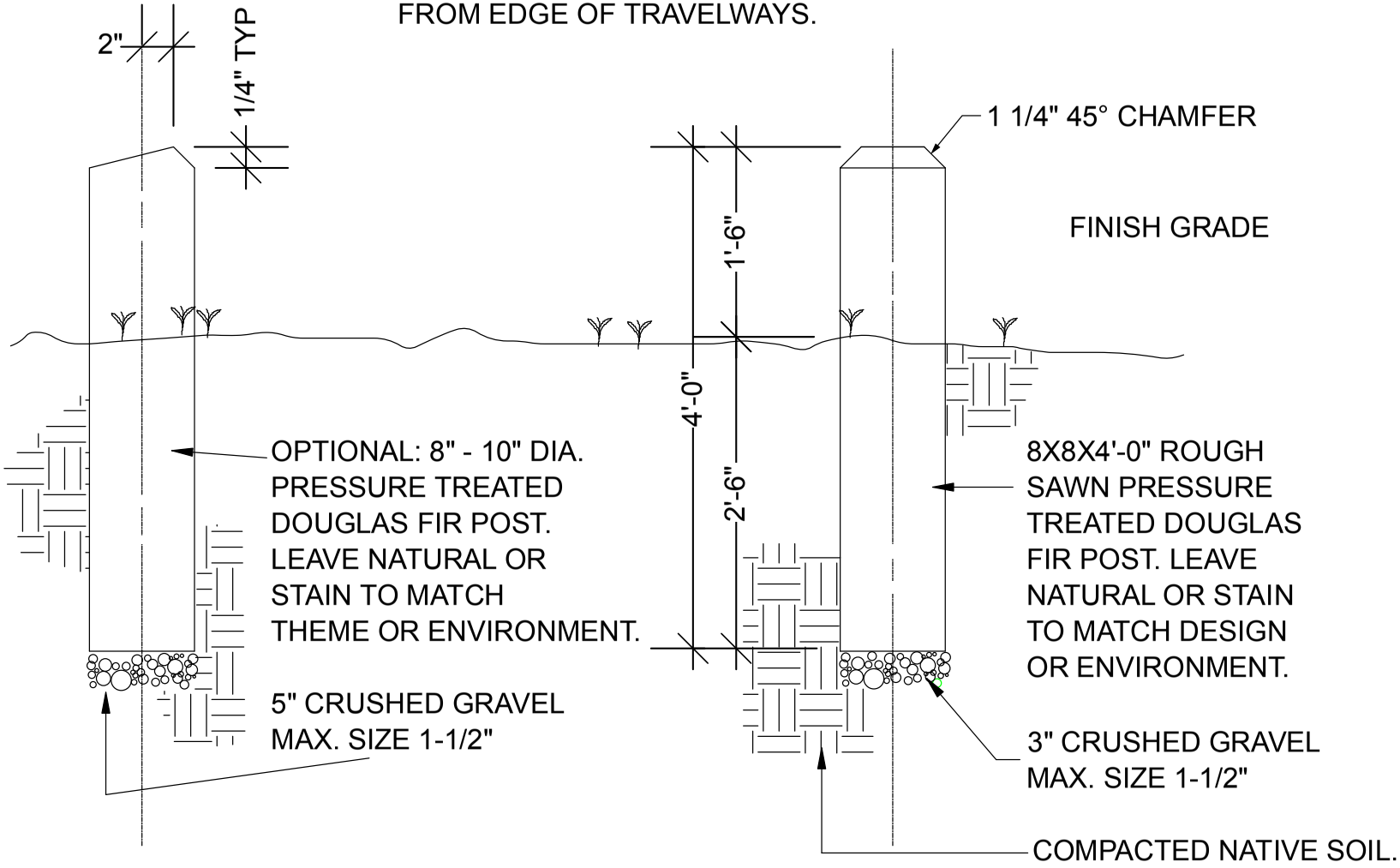

WOOD POST OR BOLLARD

FENCES

Fieldstone Fence Examples

These drawings were made available by the Drystone Conservancy. Specifications for these walls are available in leaflets at: http://www.dswa.org.uk/Publication_frames_page.htm. In the United States these types of walls are referred to as fieldstone fences.

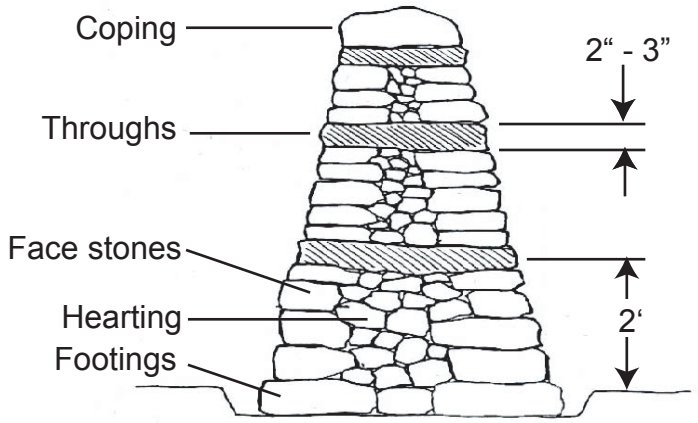

Bottom width 1’-8” to 3”
depending on type of stone.

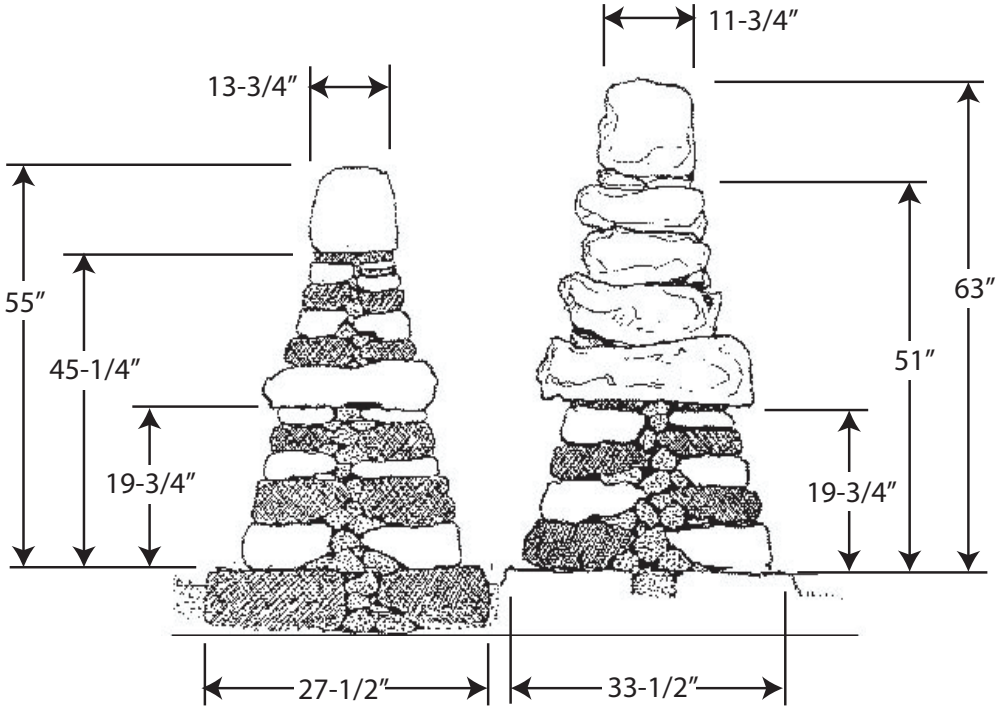

Standard Walls

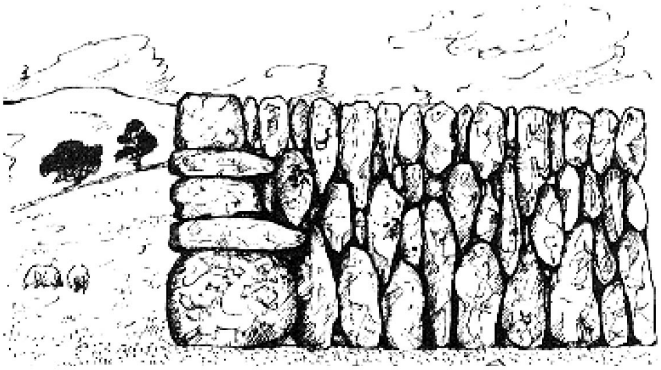

Single Wall

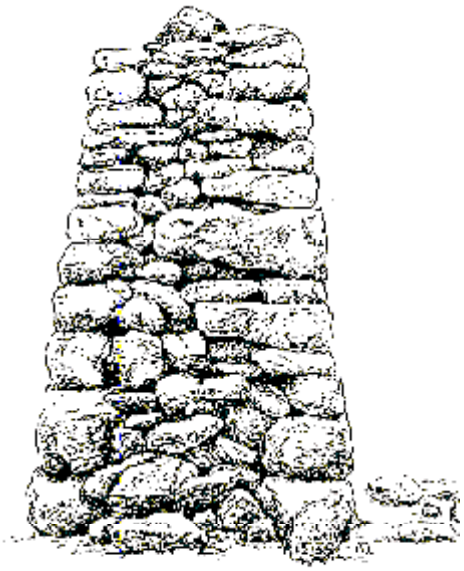

Cotswold Wall

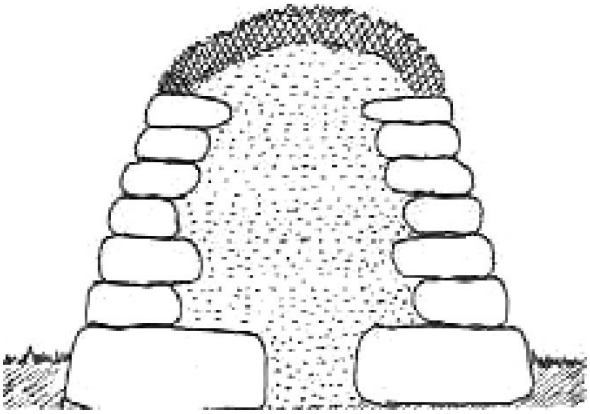

Clawdd Wall

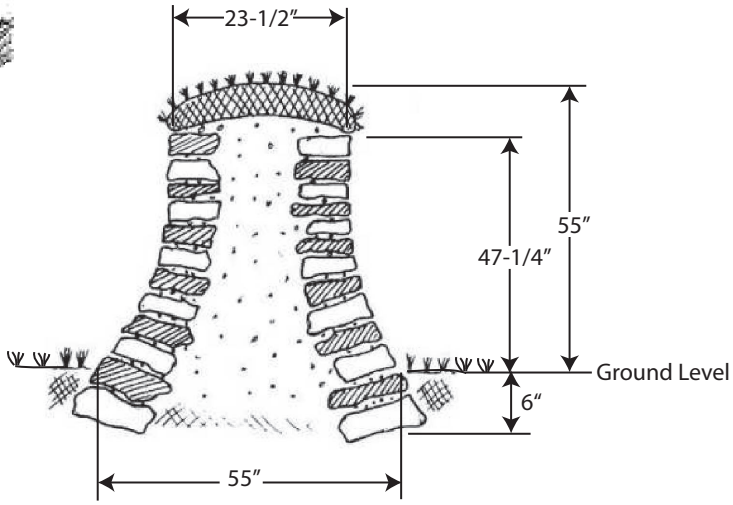

Cornish Hedge

GATES

NOTE: LOCKING POSTS, ONE EACH, WILL BE REQUIRED AT THE OPEN AND CLOSED POSITIONS OF THE GATE

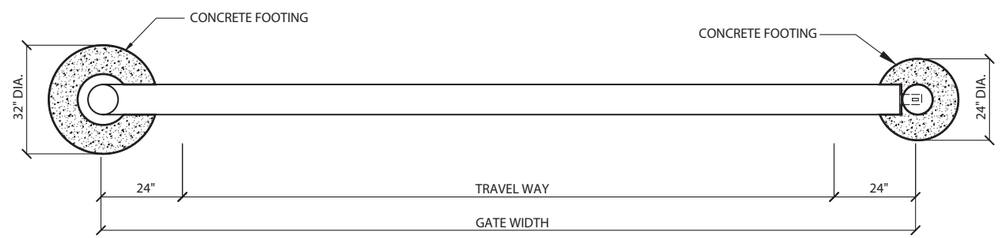

1 PLAN VIEW
Not to Scale

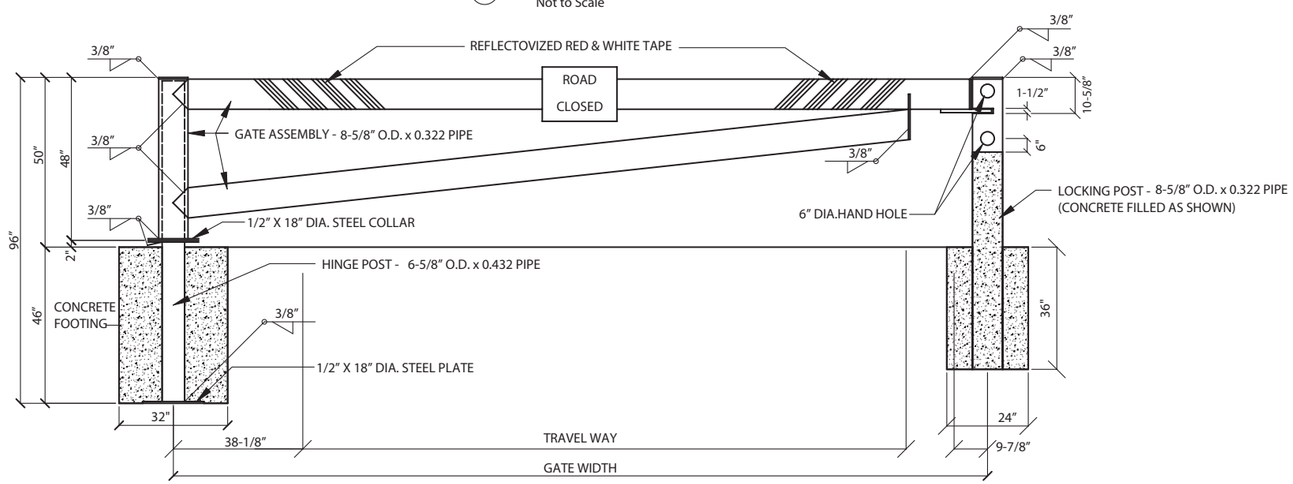

2 ELEVATION
Not to Scale

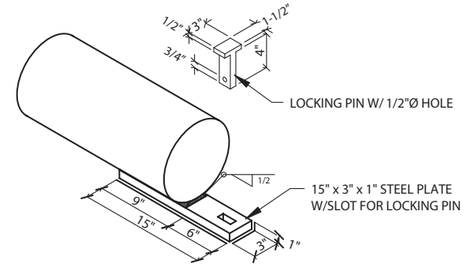

4 ISOMETRIC-LOCKING SYSTEM
Not to Scale

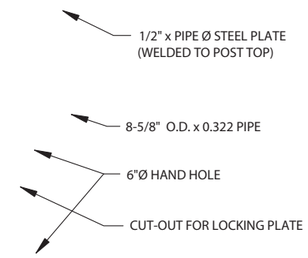

8 ISOMETRIC-LOCKING POST
Not to Scale

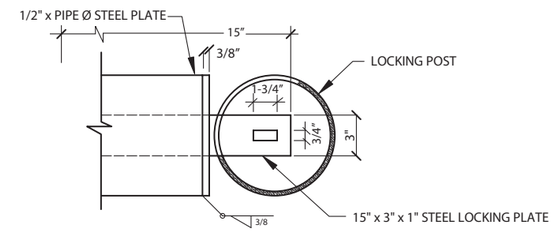

5 SECTION THRU LOCKING POST
Not to Scale

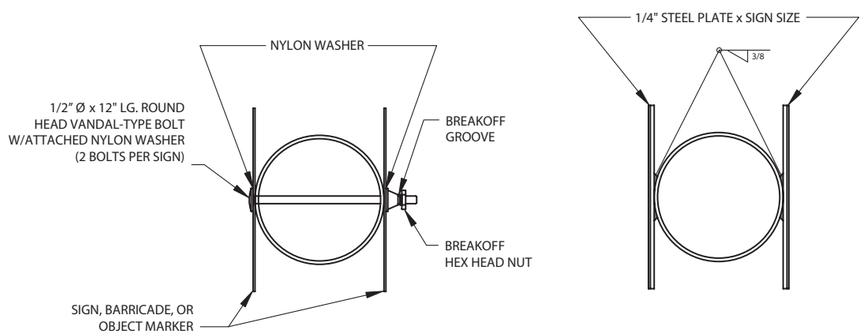

3 DETAILS-GATE ATTACHMENTS
Not to Scale

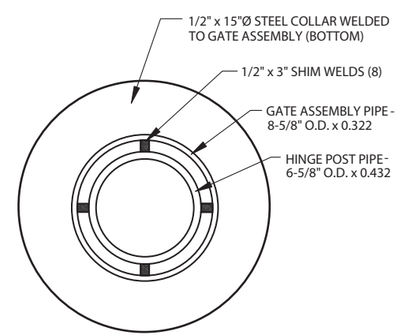

6 SECTION @ HINGE POST
Not to Scale

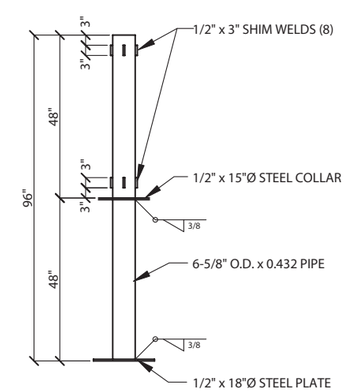

7 DETAIL-HINGE POST
Not to Scale

NOTES:

1. PIPE SHALL MEET THE REQUIREMENTS OF ASTM A 53, GRADE B. PIPE SIZE SHALL BE AS SHOWN ON THE DRAWINGS
2. CONCRETE SHALL BE IN ACCORDANCE WITH THE REQUIREMENTS OF SPECIFICATION SECTION 601.
3. GATE AND LOCKING POSTS SHALL BE PRIMED (1 COAT) AND PAINTED (2 COATS), COLOR WHITE, IN ACCORDANCE WITH SECTION 708-PAINT AFTER FABRICATION.

U.S. DEPARTMENT OF AGRICULTURE FOREST SERVICE
ANGELES NATIONAL FOREST

DESIGNED ____ TITLE ____ DATE ____
DRAWN ____ CHECKED ____ DATE ____
TECHNICIAL APPROVAL:
BY ____ TITLE ____ DATE ____
BY ____ TITLE ____ DATE ____

CROWN COMPLEX ROAD REHABILITATION
ROAD CLOSURE GATE DETAILS

CONTROL NO.
REV. DATE ____
SHEET 6 OF 7

Gate Installation Typical

GENERAL NOTES:

1. Surface bypass 20' each side of barrier with 6" crushed aggregate.
2. Remove any burrs or sharp edges on top end of culvert.
3. Place type 3 object markers on both sides of gate hinge post. Apply according to MUTCD, FS EM7100–15.
4. Fill culvert and overfill for future settlement with material from excavation or adjacent cutbank.
5. Install road use mounting plate facing closure.

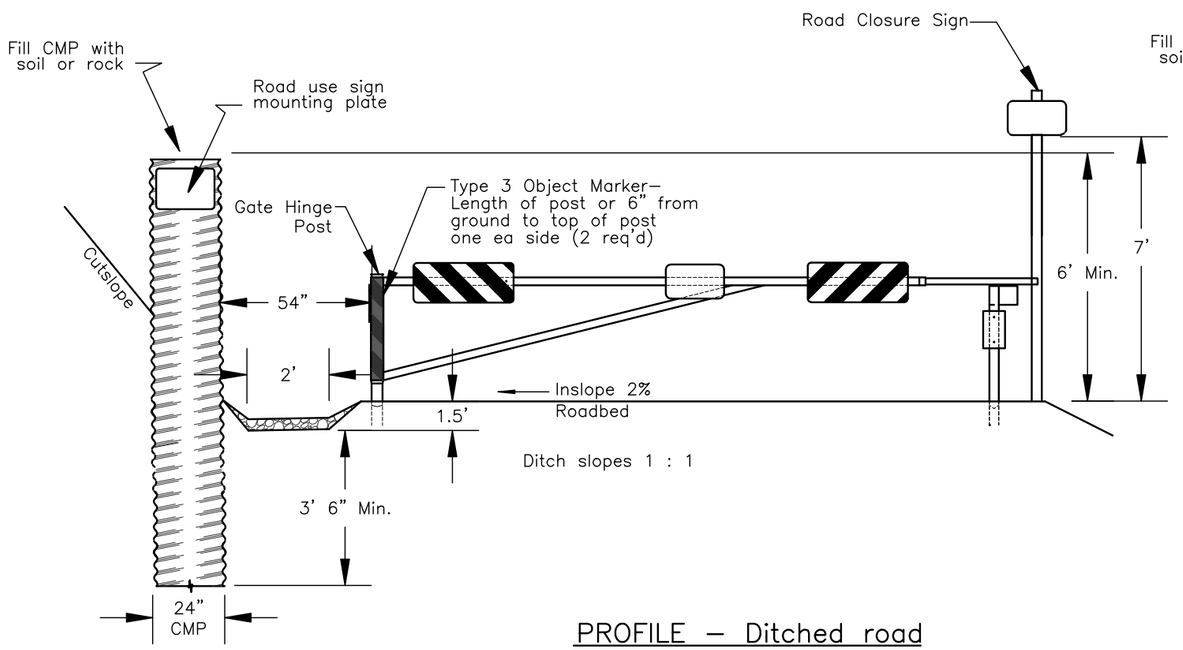

PROFILE – Ditched road

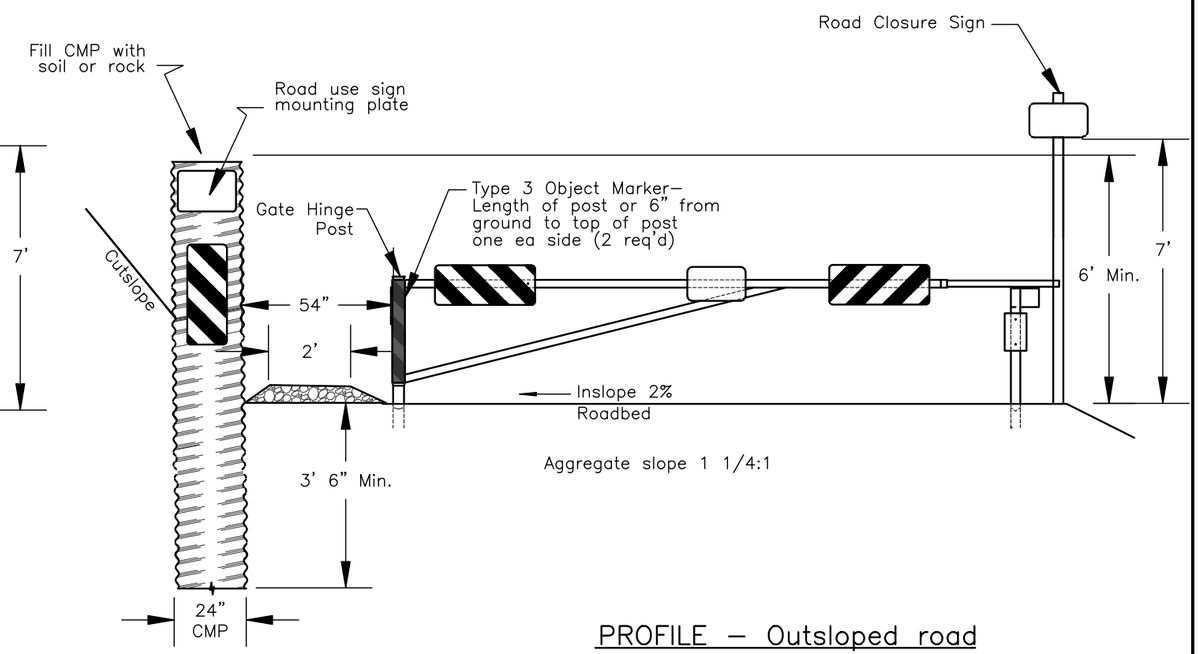

PROFILE – Outsloped road

No Scale

GATE BYPASS SHT 1A

Guardrail Installation Typical

Timber Sale

Closure to Use By Others, C5.419#

GENERAL NOTES:

1. Surface bypass 20' each side of barrier with 6" crushed aggregate.
2. Remove any burrs or sharp edges on top end of culvert.
3. Place type 3 object markers on both sides of gate hinge post. Apply according to MUTCD, FS EM7100–15.
4. Fill culvert and overfill for future settlement with material from excavation or adjacent cutbank.
5. Install road use mounting plate facing closure.

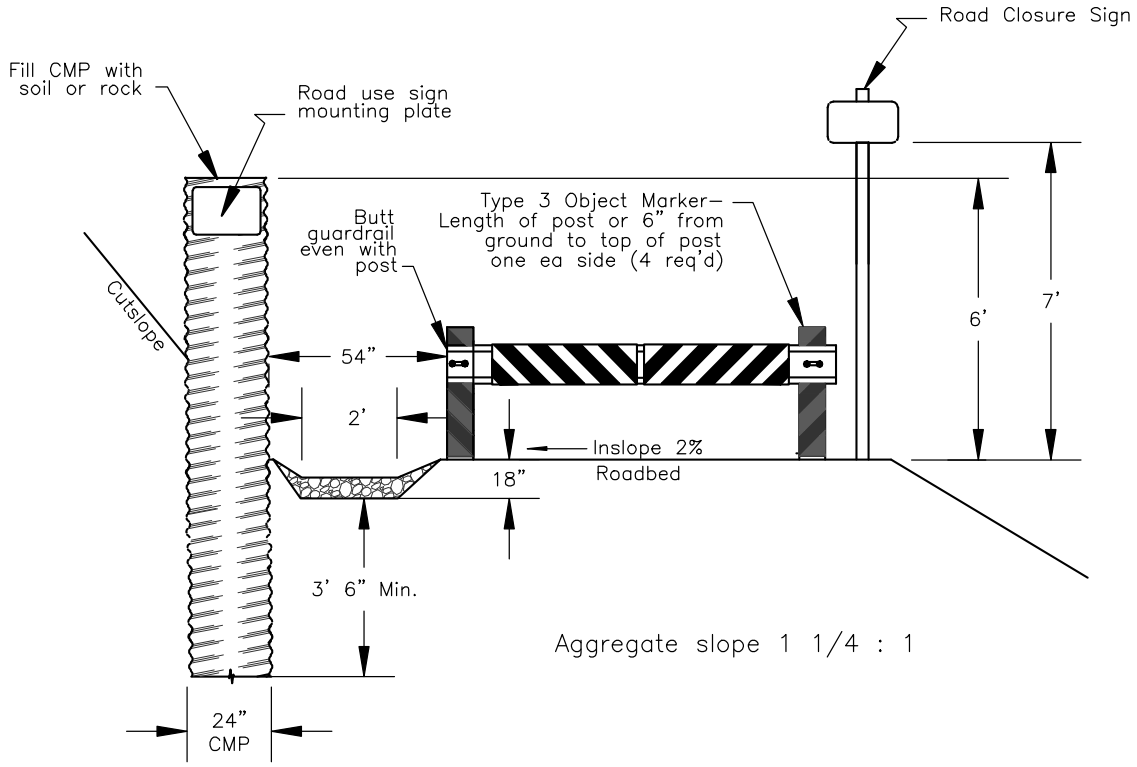

PROFILE – Ditched road

No Scale

Gate Bypass Sht 1B

Guardrail Barrier Detail

Timber Sale

Closure to Use By Others, C5.419#

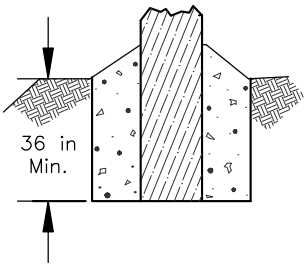

18 in. MIN. DIA. HOLE EXCAVATED FOR POST. BACKFILL ENTIRELY WITH NATIVE MATERIAL

POST BACKFILL DETAIL

GENERAL NOTES:

1. Posts shall be dressed, rough or worked lumber, conforming to the requirements of AASHTO designation M–168–84. Post shall be structural grade No. 2 or better, when graded according to current rules of either the West Coast Lumber Inspection Bureau or Western Wood Products Association. Posts shall be treated in accordance with AWPA C–2 using one of the following:
   A. Water born preservatives per AWPA Standard P5 to a retention of 6 kg/m3.
   B. Pentachlorophenol meeting AWPA P–8 using an AWPA P–9 type A solvent to a retention of 6 kg/m3.
   C. Cresote meeting AWPA P1/P13 to a retention of 130 kg/m3.
2. Drawings not to scale.
3. Barriers shall be located as shown in C5.419#.
4. Guardrail shall galvanized beam–type guardrail, Class A, Type 2, meeting the requirements of Section 710 of Forest Service Specifications for Construction of Roads and Bridges, 1996. Barricade Markers shall be bolted on quardrail with nuts welded to prevent loosening.
5. Type 3 Object Markers & Barricade Markers shall be according to MUTCD, FS EM7100–15.

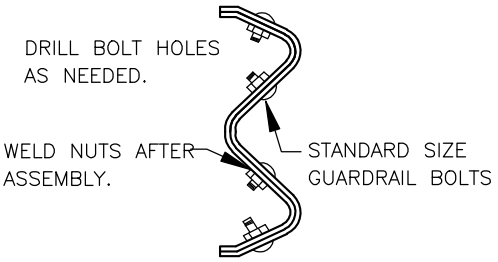

MINIMUM LONGITUDINAL OVERLAP = 12 in.

SPLICE DETAIL

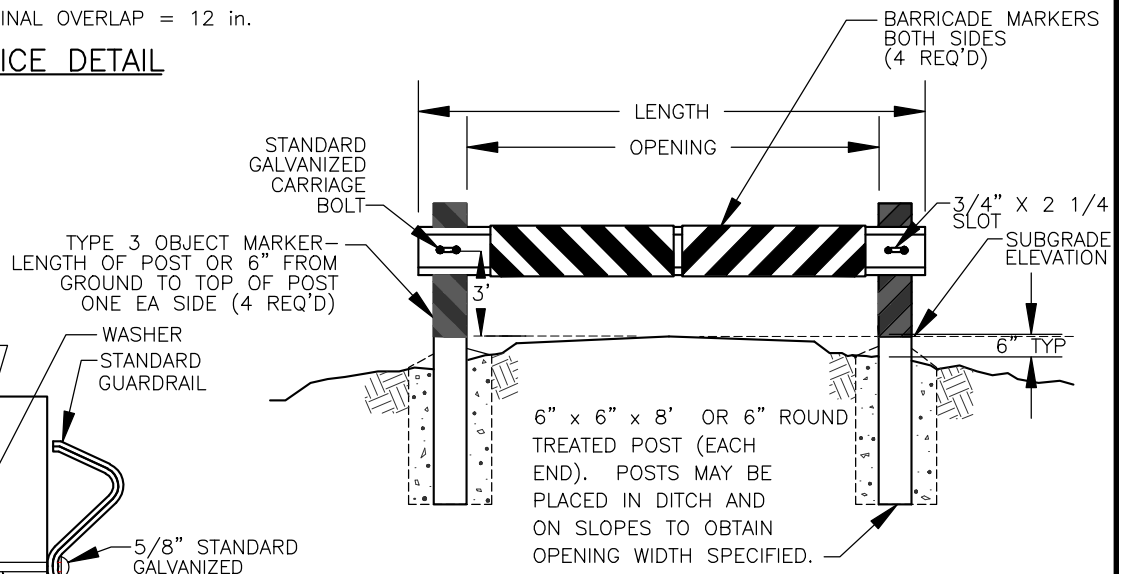

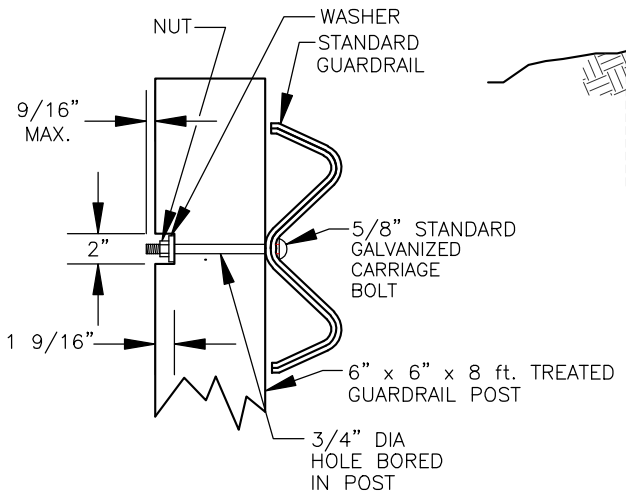

GUARDRAIL ATTACHMENT DETAIL

LENGTH CHART	
OPENING	LENGTH
14 ft.	15.5 ft.
15 ft	16.5 ft.
16 ft.	17.5 ft.

Gate Bypass Sht 2

Gate Installation Typical

GENERAL NOTES:

1. Surface bypass 20' each side of barrier with 6" crushed aggregate.
2. Remove any burrs or sharp edges on top end of culvert.
3. Place type 3 object markers on both sides of gate hinge post. Apply according to MUTCD, FS EM7100-15.
4. Fill culvert and overfill for future settlement with material from excavation or adjacent cutbank.
5. Install road use mounting plate facing closure.

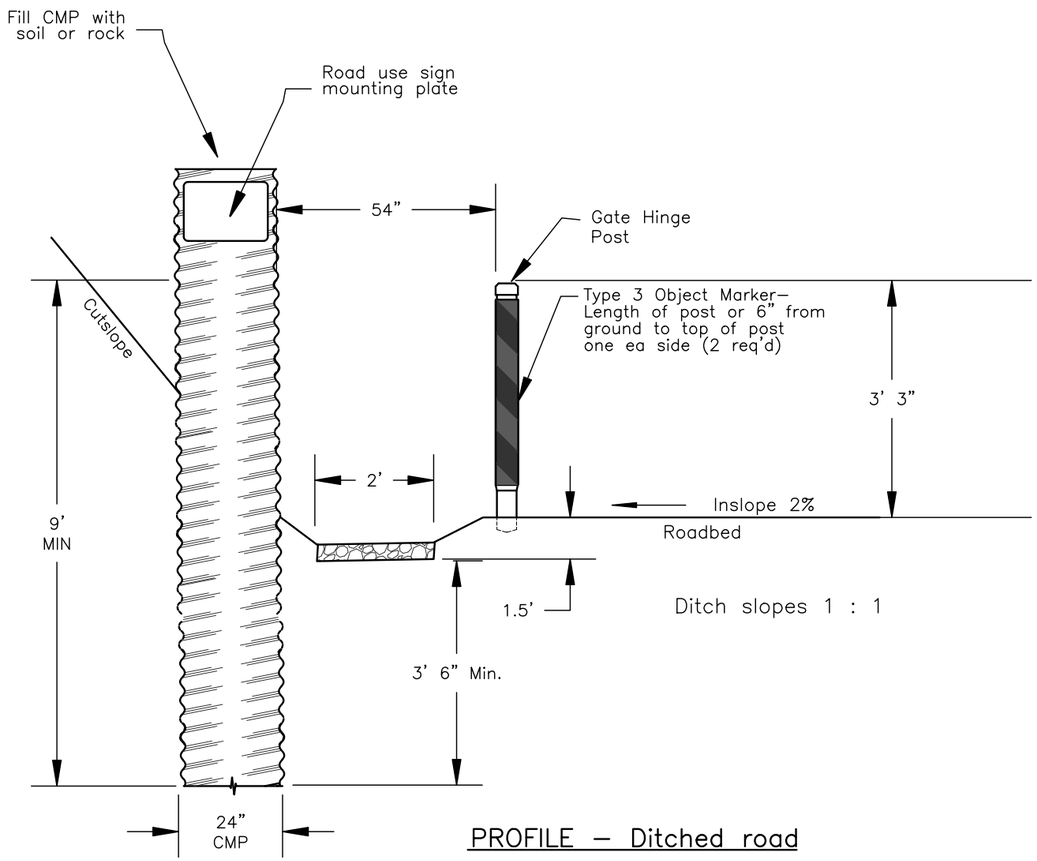

PROFILE – Ditched road

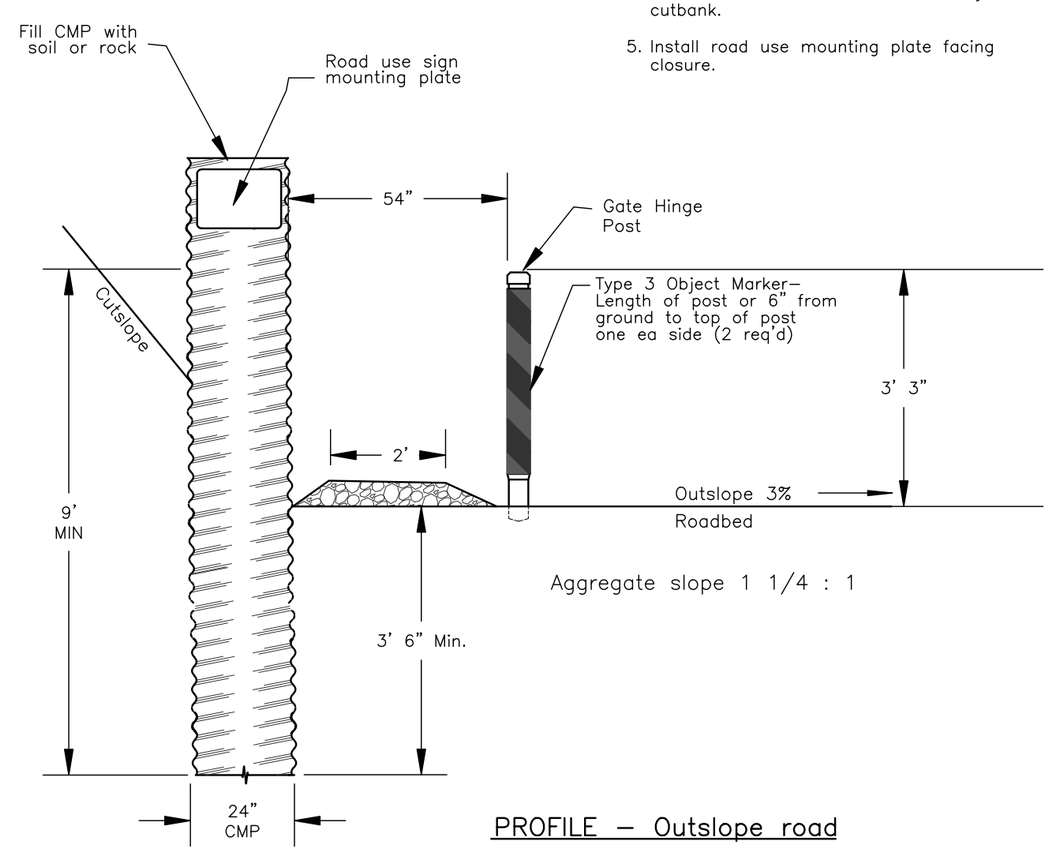

PROFILE – Outslope road

No Scale

GATE BYPASS SHT 3

GATE BARRIER – RAIL TYPE

PROJECT	SHEET	TOTAL SHEETS
	1 OF 2	

H0000028
11–1–89

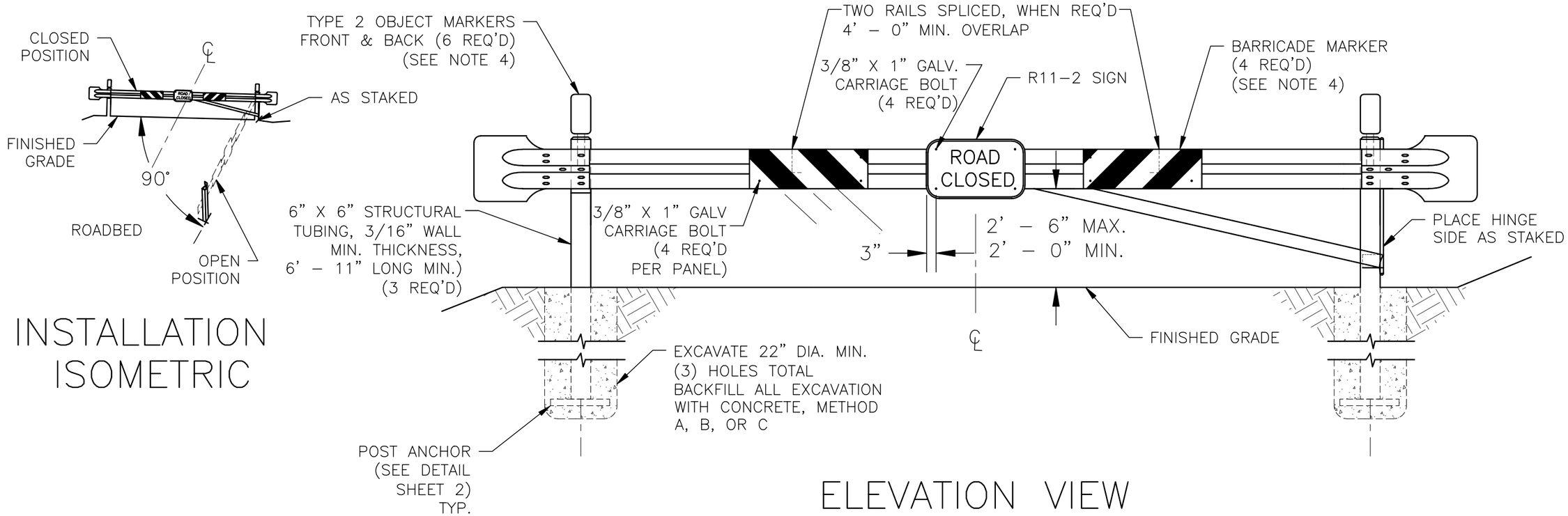

NOTES:

1. ALL STEEL COMPONENTS EXCEPT GUARDRAIL, END SECTIONS, PIPE & BOLTS PER A.S.T.M. DESIGNATION A36.
2. ALL WELDS 3/16" EXCEPT AS SHOWN. WELDING TO BE PER STRUCTURAL WELDING CODE–AWS.
3. GATE SECTION TO BE "ECONO–BEAM" GUARDRAIL – MANUFACTURED BY ARMCO STEEL FABRICATORS OR EQUAL. END SECTIONS TO BE OF LIKE MATERIAL & CROSS SECTION USED FOR GATE SECTION.
4. BARRICADE MARKERS, TYPE 2 OBJECT MARKERS & ROAD CLOSED SIGN (R11–2) SHALL BE IN ACCORDANCE WITH THE "MANUAL OF UNIFORM TRAFFIC CONTROL DEVICES", FS EM7100–15.
5. PEEN ALL BOLT ENDS TO PREVENT REMOVAL. BOLTS ON BRACE MUST BE CAPABLE OF BEING LOOSENED FOR ADJUSTING GATE.
6. FIELD VERIFY GROUND ELEVATIONS PRIOR TO CUTTING POSTS FOR LENGTH. ENTIRE STRUCTURE TO BE SHOP FABRICATED EXCEPT MINOR FIELD ADJUSTMENTS ARE PERMITTED IN THE LOCKING DEVICE & RECEIVING SLOTS.
7. ENTIRE STRUCTURE EXCEPT SIGN & OBJECT MARKERS TO BE THOROUGHLY CLEANED OF RUST, SLAG, & OTHER FOREIGN MATTER & PRINED WITH ON COAT OF WHITE MACHINE PAINT IN ACCORDANCE WITH SECTION 708.
8. LUBRICATE HINGE ASSEMBLY FULL LENGTH WITH MULTIPURPOSE MARINE A–LUBE OR EQUAL.

HD000042 1–11–89

GATE BARRIER — RAIL TYPE

PROJECT	SHEET	TOTAL SHEETS
	2 OF 2	

H0000028
11-1-89

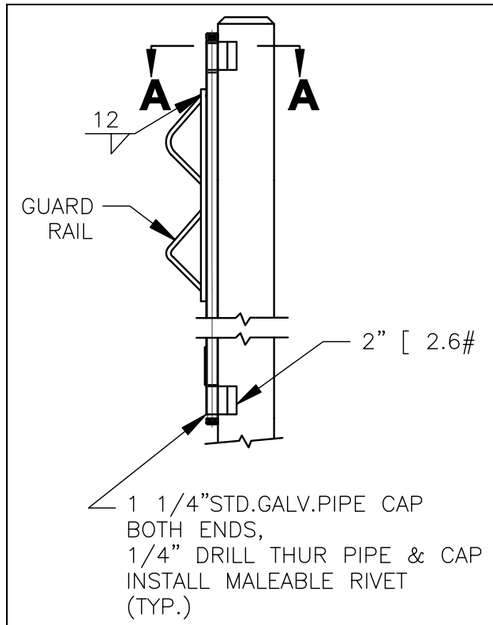

HINGE DETAIL

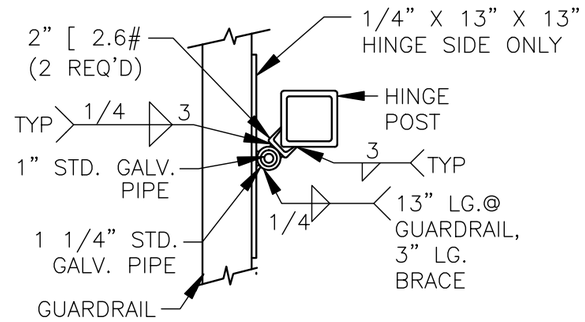

SECTION A–A

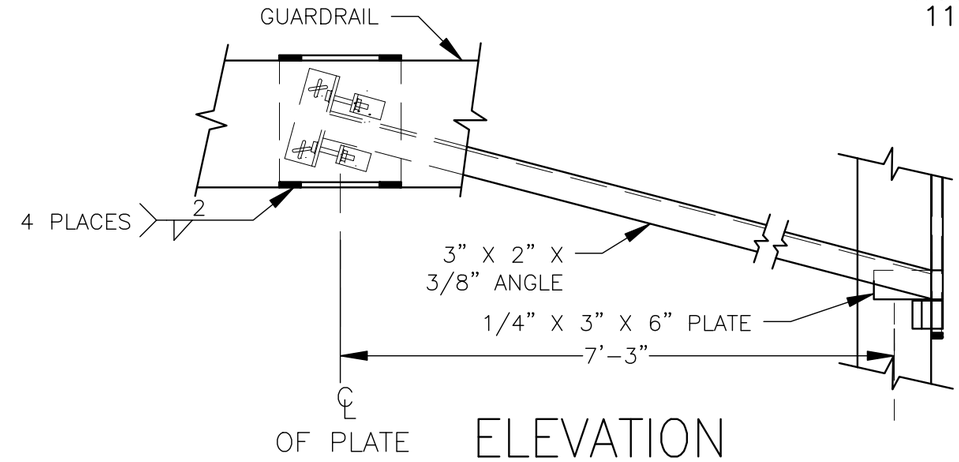

ELEVATION

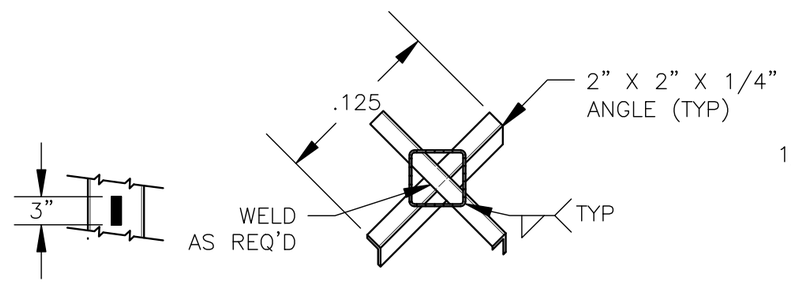

POST ANCHOR DETAIL

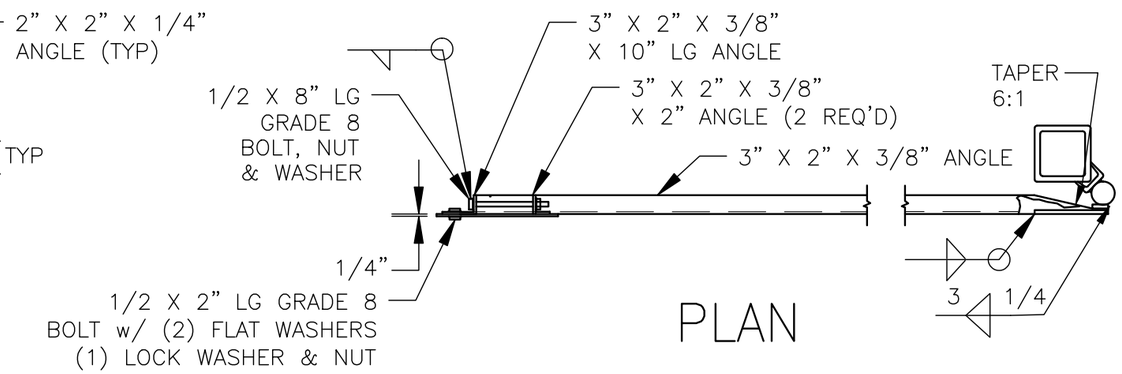

PLAN

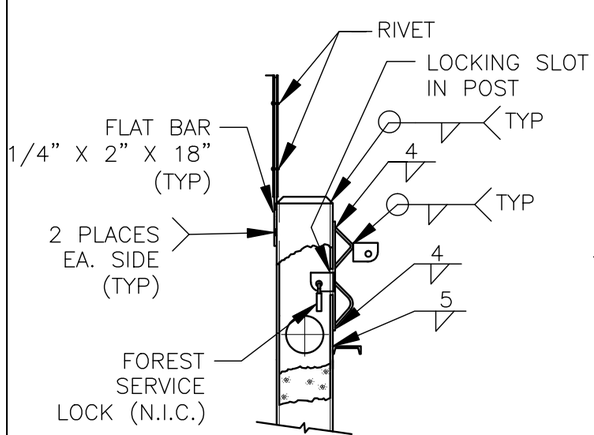

CLOSED POSITION
LOCKING POST & GATE

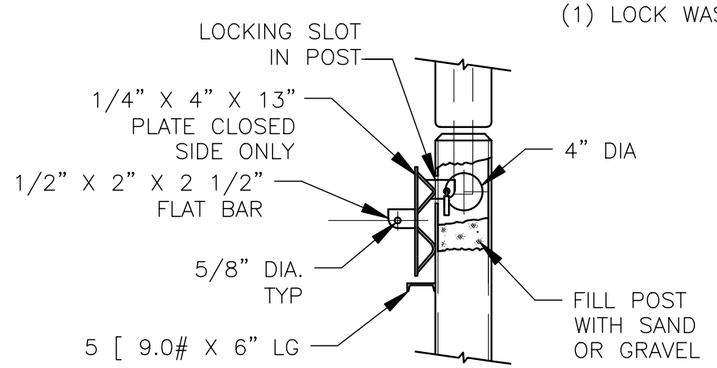

OPEN POSITION
LOCKING POST & GATE

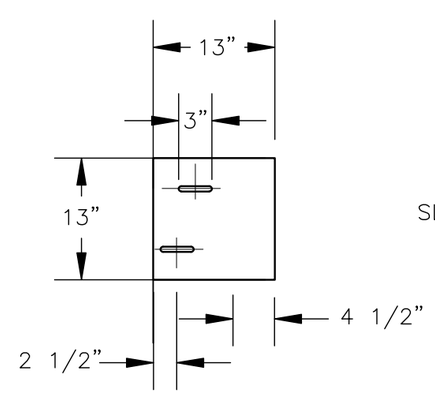

PLATE–DETAIL

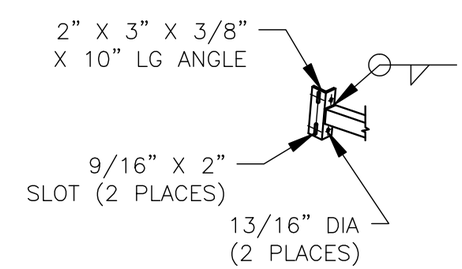

ADJUSTABLE
BRACE DETAILS

H0000029 9/11/88

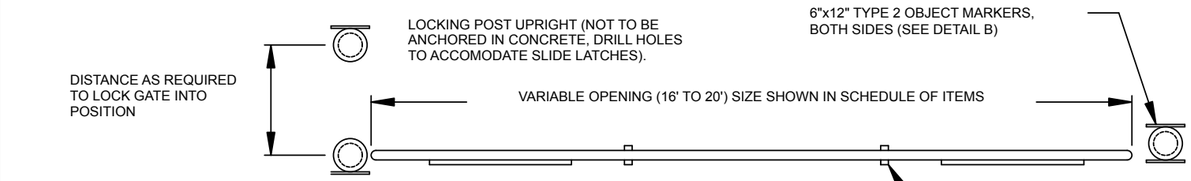

PLAN VIEW

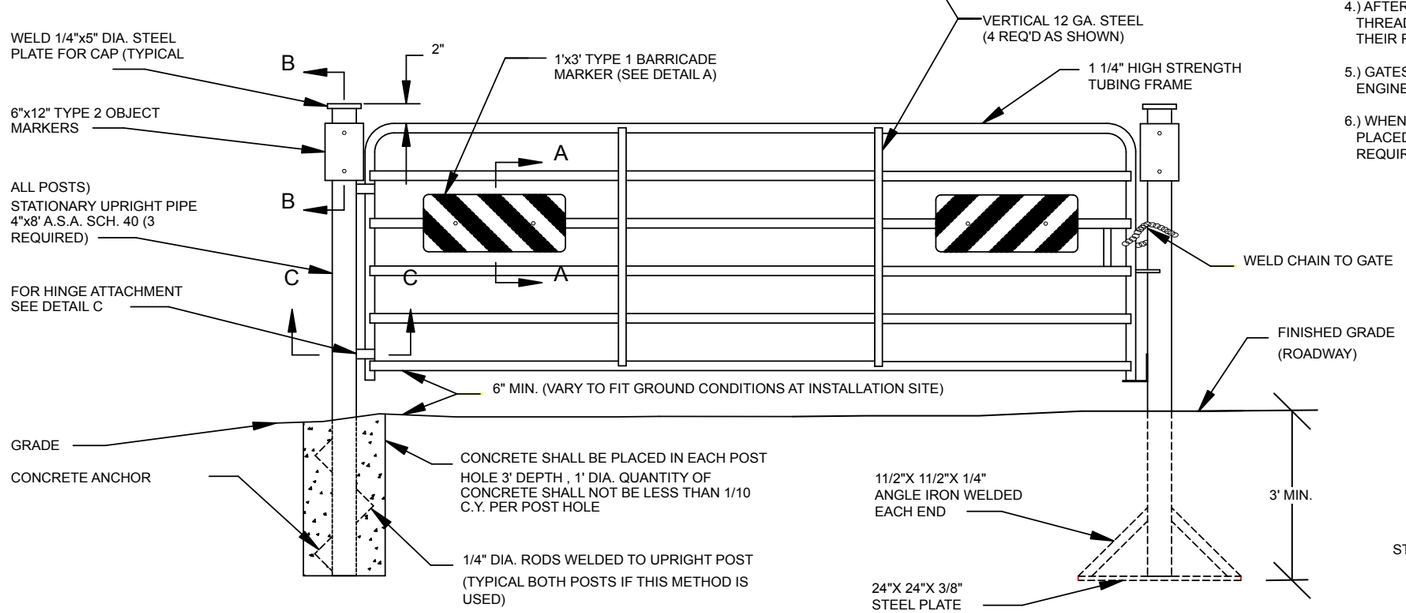

ELEVATION VIEW

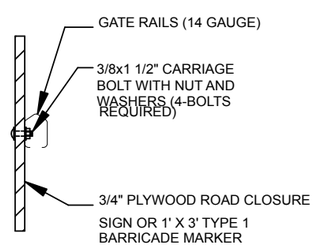

DETAIL "A"

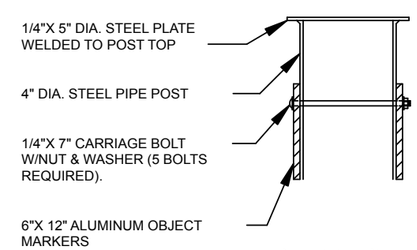

DETAIL "B"

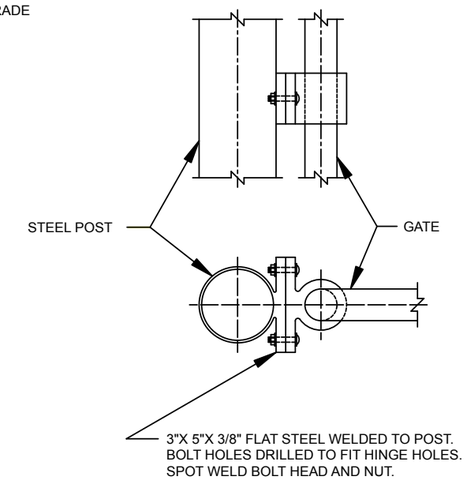

DETAIL "C"

NOTES:

1.) GATE, ALL HARDWARE, SIGNS AND SIGN PLACEMENT, ETC. TYPICAL WITH ELEVATION VIEW AS SHOWN ABOVE. HEAVY DUTY GATE MANUFACTURED BY POWDER RIVER CO. OR EQUAL IS ACCEPTABLE.

2.) ALL STEEL SURFACES SHALL RECIEVE ONE COAT OF PAINT AFTER FABRICATION AND ONE COAT AFTER INSTALLATION. PAINT SHALL MEET THE REQUIRMENTS OF SECTION 708.

3.) ALL SIGNS AND MARKERS FOR THE GATE WILL BE FURNISHED BY THE FOREST SERVICE AND INSTALLED BY THE CONTRACTOR. IN ACCORDANCE WITH THE "MANUAL OF UNIFORM TRAFFIC CONTROL DEVICES".

4.) AFTER THE GATE IS INSTALLED AND ADJUSTED, ALL BOLT THREADS SHALL BE PEENED OR SPOT WELDED TO PREVENT THEIR REMOVAL.

5.) GATES SHALL BE INSTALLED IN THE LOCATIONS MARKED BY THE ENGINEER.

6.) WHEN USING CONCRETE FOR SETTING POST, CONCRETE SHALL BE PLACED AGAINST UNDISTURBED SOIL AND SHALL MEET THE REQUIREMENTS OF SECTION 602.

LIGHTWEIGHT METAL GATE

PR-GATE.DWG REV. 1/97

REC40-01

1 ASSEMBLY

MATERIAL LIST

ITEM NO.	PART OR ASSEMBLY NOMENCLATURE	NO. REQ'D.	MATERIAL OR DESCRIPTION	SHT NO.	ITEM NO.	PART OR ASSEMBLY NOMENCLATURE	NO. REQ'D.	MATERIAL OR DESCRIPTION	SHT NO.
1	ASSEMBLY	1	PARTS 2 THRU 18		10	SIGN BRACKET	2	18" X 1" X 2" X 4" LG ANGLE, HRMS	
2	END POST	2	SEE PART NO. 2	2	11	ANCHOR	12	5/8" X 13" LG ROUND ROD, HRMS	
3	HORIZONTAL RAIL	2	SEE PART NO. 3	2	12	FOOTING	4	PORTLAND READY MIX CONCRETE	
4	DIAGONAL RAIL	2	SEE PART NO. 4	2	13	PIPE INSERT	1	SEE PART NO 13	2
5	VERTICAL POST	2	SEE PART NO. 5	2	14	SLEEVE	4	SEE PART NO. 14	
6	STIFFENER	2	2" X 42 –1/2" LG SCH. 40 BL PIPE (OR SCH 80)						
7	BAR–SLIDE THRU	1	SEE PART NO. 7	2	15	CAP	4	SEE PART NO. 15	2
8	TIE IN	10	SEE PART NO. 8	2	16	BOLT MODIFICATION	4	SEE PART NO. 16	2
					17	NUT	4	SEE PART NO. 17	2
9	SIGN PLATE	1	SEE PART NO. 9	2	18	LOCK	4	SEE PART NO. 18	2

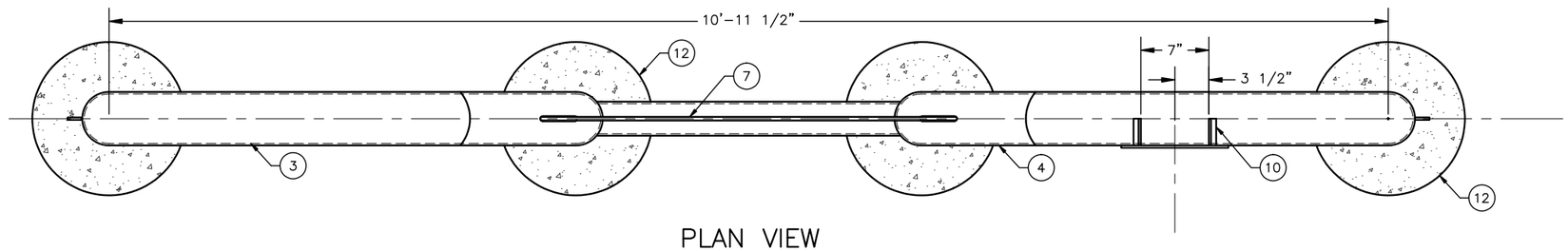

PLAN VIEW

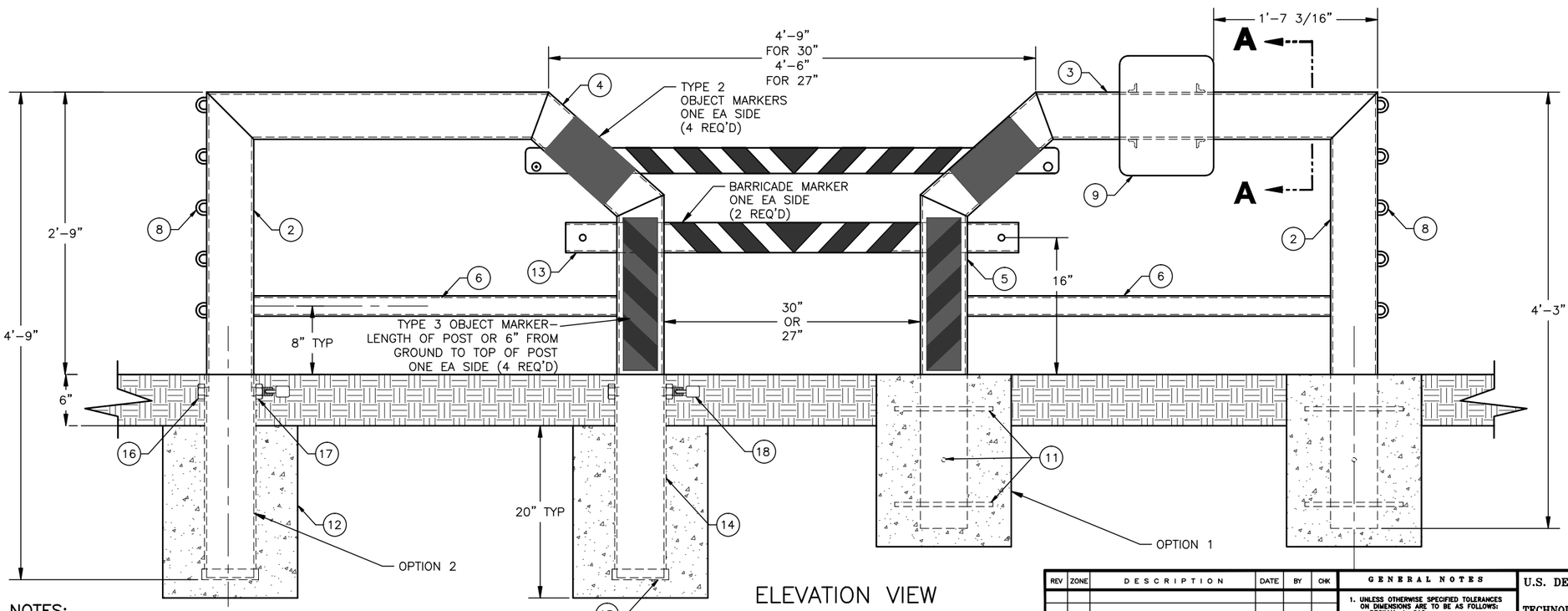

ELEVATION VIEW

NOTES:

1. ALL WELDED CONSTRUCTION.
2. USE SCHEDULE 40 BLACK PIPE, SCHEDULE 80 IN HIGH VANDALISM AREA.
3. APPLY OBJECT & BARRIER MARKERS ACCORDING TO MUTCD, FS EM7100–15.
4. CONSTRUCT ON FLAT LEVEL GROUND.
5. PROVIDE FOR SUFFICIENT SIGHT DISTANCE.
6. PROVIDE A TURN AROUND ON ONE SIDE OF BARRIER.
7. PLACE TRAIL DESIGNATION SIGNING ON RIGHT HAND SIDE OF BARRIER.
8. USE CORTEN STEEL, DO NOT PAINT.
9. SLIDE THRU CLOSURE BAR, SHALL BE LOCKABLE IN BOTH OPEN AND CLOSED POSITION OR REMOVABLE.
10. WELD TIE IN TO OUTSIDE OF BARRIER POST TO ATTACH FENCING.
11. VARIOUS CONFIGURATIONS FOR BARRIER, COMPONENTS CAN BE PREFABRICATED FOR EASE OF GETTING TO SITE.

REV	ZONE	DESCRIPTION	DATE	BY	CHK

GENERAL NOTES

1. UNLESS OTHERWISE SPECIFIED TOLERANCES ON DIMENSIONS ARE TO BE AS FOLLOWS: DECIMAL ± .010 FRACTIONAL ± 1/16 ANGLES ± 1/2
2. REMOVE ALL BURRS AND SHARP CORNERS.
3. DO NOT SCALE DRAWING.
4. MAKE NO SUBSTITUTION OF MATERIALS OR ALTERATION OF DIMENSIONS WITHOUT PRIOR WRITTEN APPROVAL BY THE TECHNOLOGY AND DEVELOPMENT CENTER.

U.S. DEPARTMENT OF AGRICULTURE
FOREST SERVICE
TECHNOLOGY & DEVELOPMENT CENTER
SAN DIMAS, CALIFORNIA 91773

WIDTH LIMITER GATE 27-30"
ASSEMBLY AND DETAILS

DRAWN BY M.M.Damole CHKD. BY DT DATE 6–9–03
REVIEWED BY Cam Lockwood DATE 9–03
APPROVED D. Meadows DATE 9–03
SCALE NONE DATE 6–03

DWG NUMBER REC40–01 REV 0

SHEET 1 OF 2

FY 03

REC40-01

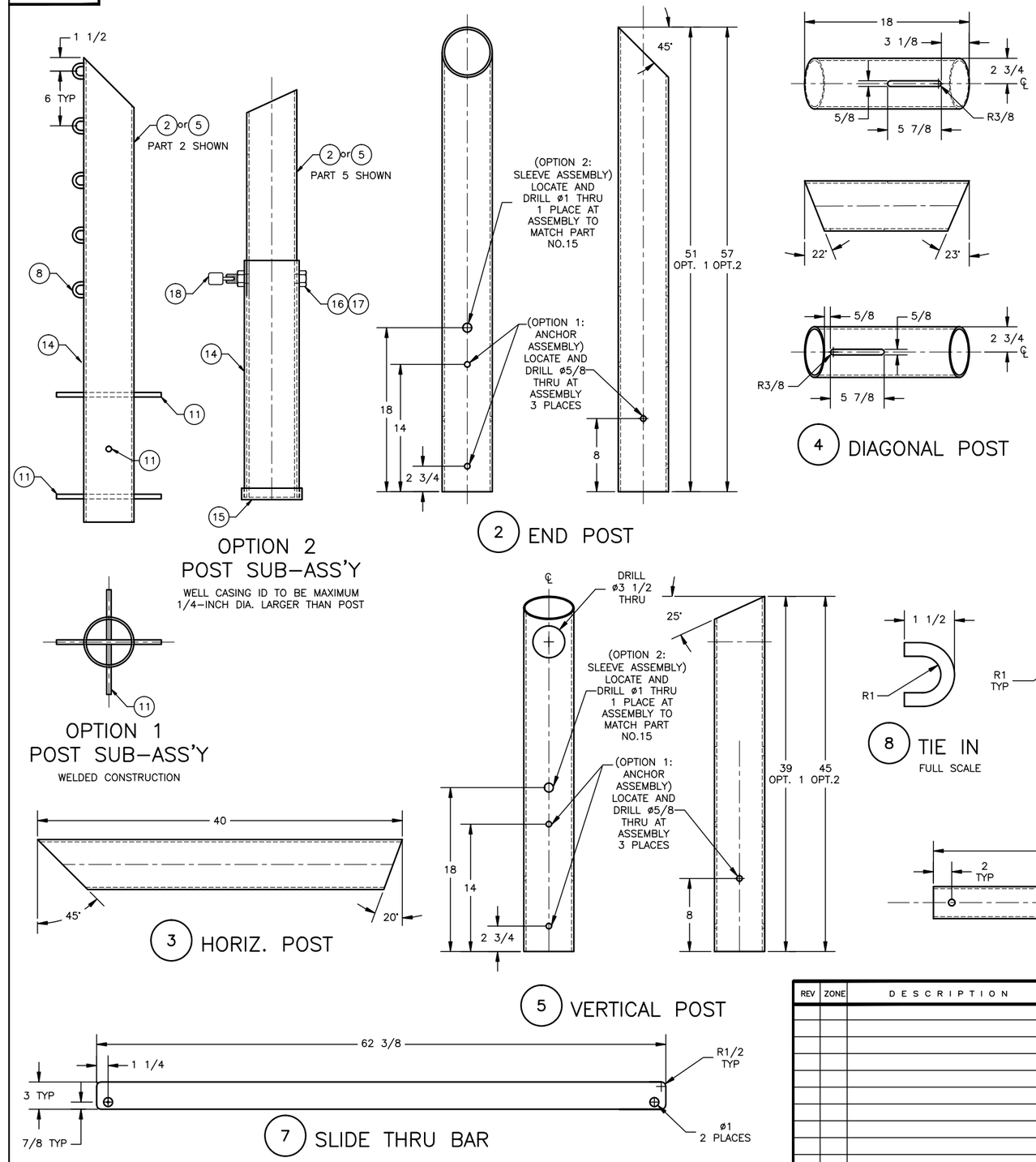

MATERIAL LIST

ITEM NO.	PART OR ASSEMBLY NOMENCLATURE	NO. REQ'D.	MATERIAL OR DESCRIPTION	SHT NO.
1	ASSEMBLY	1	PARTS 2 THRU 18	
2	END POST	2	5" SCH. 40 BL PIPE (OR SCH 80)	
3	HORIZONTAL RAIL	2	5" SCH. 40 BL PIPE (OR SCH 80)	
4	DIAGONAL RAIL	2	5" SCH. 40 BL PIPE (OR SCH 80)	
5	VERTICAL POST	2	5" SCH. 40 BL PIPE (OR SCH 80)	
6	STIFFENER	2	SEE PART NO. 6	1
7	BAR-SLIDE THRU	1	1/2" X 3" BAR STOCK HRMS	
8	TIE IN	10	3/8" ROUND ROD, HRMS OR CHAIN LINK THAT MEETS	
			BOTH STRUCTURAL & DIMENSIONAL REQUIREMENTS	
9	SIGN PLATE	1	SEE PART NO. 9	1
10	SIGN BRACKET	2	SEE PART NO. 10	1
11	ANCHOR	12	SEE PART NO. 11	1
12	FOOTING	4	SEE PART NO. 12	1
13	PIPE INSERT	1	3" SCH. 40 BL PIPE	
14	SLEEVE	4	BL PIPE OR USED WELL CASING 1/4" DIA. MAX.	
			LARGER THAN POST	
15	CAP	4	CAP TO FIT SLEEVE, PART NO. 14	
16	BOLT MODIFICATION	4	1-8NC X 8 LG HEAVY HEX HEAD BOLT, GALV.	
17	NUT	4	1-8NC HEAVY HEX NUT	
18	LOCK	4	2" WEATHER PROOF PADLOCK, 5/16 SHACKLE,	
			BRINKS STOCK NO. 4333-4MK, MASTERLOCK STOCK	
			NO 312MK OR EQUAL	

REV	ZONE	DESCRIPTION	DATE	BY	CHK

GENERAL NOTES

1. UNLESS OTHERWISE SPECIFIED TOLERANCES ON DIMENSIONS ARE TO BE AS FOLLOWS:
   DECIMAL ± .010
   FRACTIONAL ± 1/16
   ANGLES ± 1/2
2. REMOVE ALL BURRS AND SHARP CORNERS.
3. DO NOT SCALE DRAWING.
4. MAKE NO SUBSTITUTION OF MATERIALS OR ALTERATION OF DIMENSIONS WITHOUT PRIOR WRITTEN APPROVAL BY THE TECHNOLOGY AND DEVELOPMENT CENTER.
5. DIMENSIONS ARE IN INCHES UNLESS NOTED.

U.S. DEPARTMENT OF AGRICULTURE
FOREST SERVICE
TECHNOLOGY & DEVELOPMENT CENTER
SAN DIMAS, CALIFORNIA 91773

WIDTH LIMITER GATE 27-30"
ASSEMBLY AND DETAILS

DRAWN BY M.M.Damole CHKD. BY DT DATE 6-9-03
REVIEWED BY Cam Lockwood DATE 9-03
APPROVED D. Meadows DATE 9-03
SCALE 1/4 & NOTED DATE 6-03

DWG NUMBER REC40-01 REV 0
SHEET 3 OF 3

FY 03

REC42-01

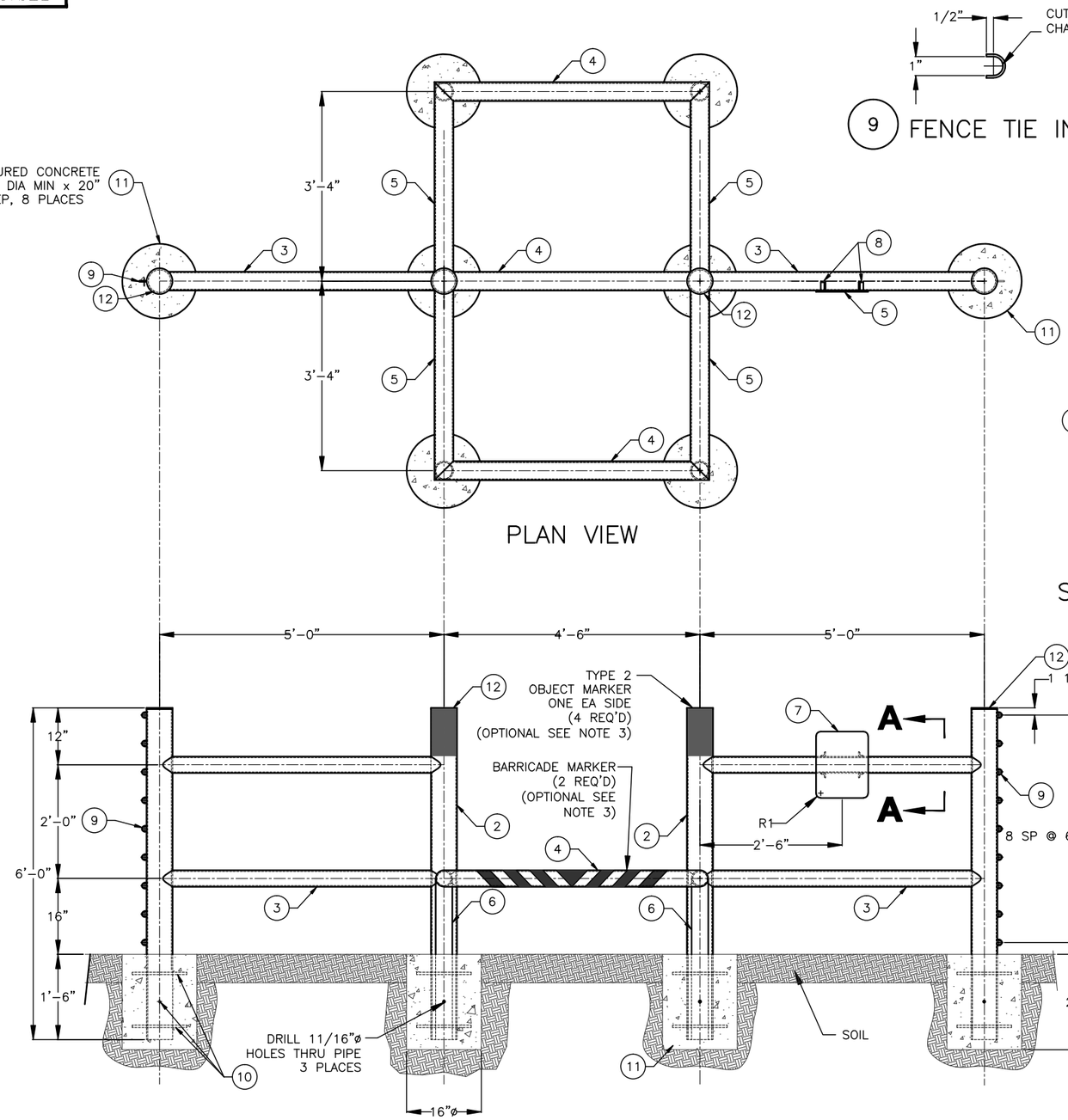

PLAN VIEW

ELEVATION VIEW

1 ASSEMBLY

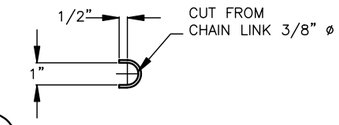

9 FENCE TIE IN

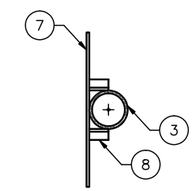

SECTION **A-A**

SCALE = 2X

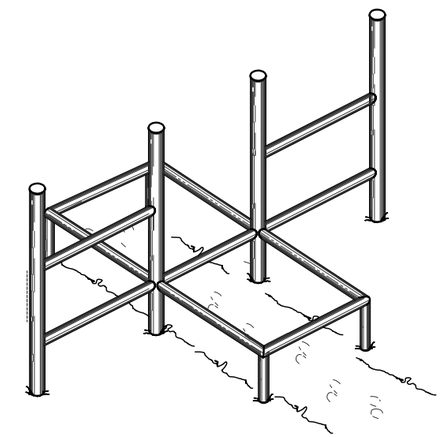

ISOMETRIC VIEW

MATERIAL LIST

ITEM NO.	PART OR ASSEMBLY NOMENCLATURE	NO. REQ'D.	MATERIAL OR DESCRIPTION	SHT
1	ASSEMBLY	1	PARTS 2 THRU 12	
2	VERTICAL FRAME	4	BL PIPE, 5"ø, SCH 80 x 72" LG	
3	HORIZONTAL FRAME	4	BL PIPE, 3 1/2"ø, SCH 80 x 60: LG	
4	HORIZONTAL FRAME	3	BL PIPE, 3 1/2"ø, SCH 80 x 54" LG	
5	HORIZONTAL FRAME	4	BL PIPE, 3 1/3"ø, SCH 80 x 40" LG	
6	VERTICAL LEG	4	BL PIPE, 3 1/2"ø, SCH 80 x 36" LG	
7	SIGN	1	HRMS, 3/16" PL x 11" x 14" LG	
8	SIGN SUPPORT	4	L2 x 1 x 1/8 x 1 3/4" LG	
9	FENCE TIE IN	20	CUT FROM CHAIN LINK 3/8" ø ROD	
10	ANCHORS	24	CRS, 5/8" ø x 13" LG	
11	FOUNDATION	8 BAGS	PORTLAND, 50# READY MIX CONCRETE	
12	COVER	4	HRMS, 1/4" PL x 5 1/2"ø	

NOTES:

1. WELDED CONSTRUCTION.
2. USE SCHEDULE 40 BLACK PIPE OR SCHEDULE 80 IN HIGH VANDALISM AREA.
3. OPTIONAL ON HIKER OR EQUESTRIAN TRAIL. APPLY OBJECT & BARRIER MARKERS ACCORDING TO MUTCD, FS EM7100-15.
4. CONSTRUCT ON FLAT AND LEVEL GROUND.
5. PROVIDE FOR SUFFICIENT SIGHT DISTANCE.
6. PROVIDE A TURN AROUND ON ONE SIDE OF BARRIER.
7. DETERMINE TRAIL MANAGEMENT OBJECTIVE FOR CONFIGURATION OF BARRIER.
8. PLACE TRAIL DESIGNATION SIGN ON RIGHT SIDE OF BARRIER.
9. USE CORTEN STEEL, DO NOT PAINT.
10. WELD TABS OR HALF CHAIN LINKS TO OUTSIDE OF BARRIER TO ATTACH FENCING.
11. VARIOUS CONFIGURATIONS FOR BARRIER, COMPONENTS CAN BE PREFABRICATED FOR EASE OF GETTING TO SITE.

GENERAL NOTES

1. UNLESS OTHERWISE SPECIFIED TOLERANCES ON DIMENSIONS ARE TO BE AS FOLLOWS:
   DECIMAL ± .010
   FRACTIONAL ± 1/16
   ANGLES ± 1/2
2. REMOVE ALL BURRS AND SHARP CORNERS.
3. DO NOT SCALE DRAWING.
4. MAKE NO SUBSTITUTION OF MATERIALS OR ALTERATION OF DIMENSIONS WITHOUT PRIOR WRITTEN APPROVAL BY THE TECHNOLOGY AND DEVELOPMENT CENTER.

U.S. DEPARTMENT OF AGRICULTURE
FOREST SERVICE
TECHNOLOGY & DEVELOPMENT CENTER
SAN DIMAS, CALIFORNIA 91773

NON-MOTORIZED TRAIL BARRIERS
ASSEMBLY AND DETAILS

REV	ZONE	DESCRIPTION	DATE	BY	CHK
1	1 A	DWG TITLE CHANGED	5/11/05	MMD	EE

DRAWN BY M.M.Damole CHKD. BY DT DATE 9-29-04
REVIEWED BY Cam Lockwood DATE 9-29-04
APPROVED D. Meadows DATE 9-29-04
SCALE Full DATE 9-29-04

DWG NUMBER REC42-01 REV 1

SHEET 1 OF 1

FY 03

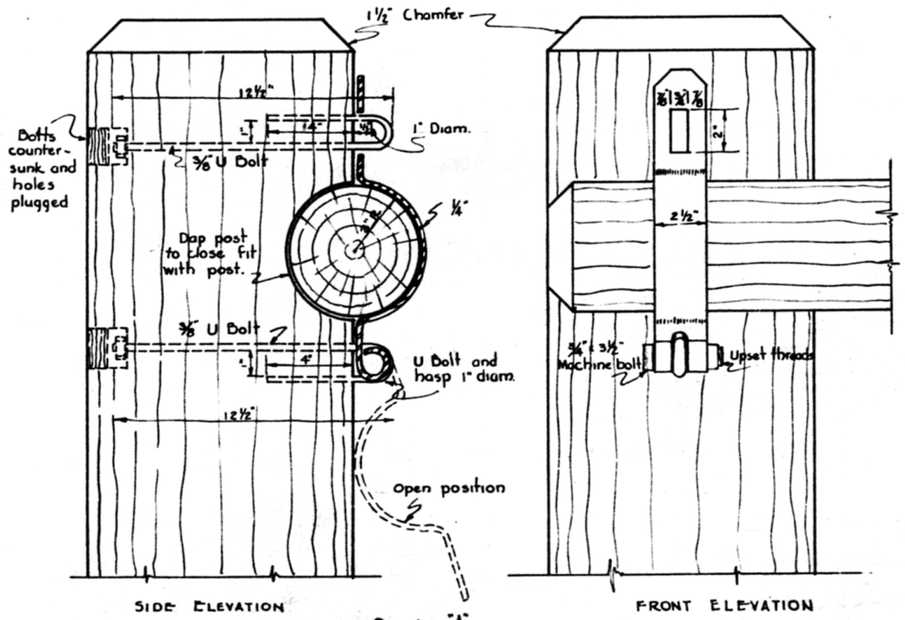

SIDE ELEVATION

FRONT ELEVATION

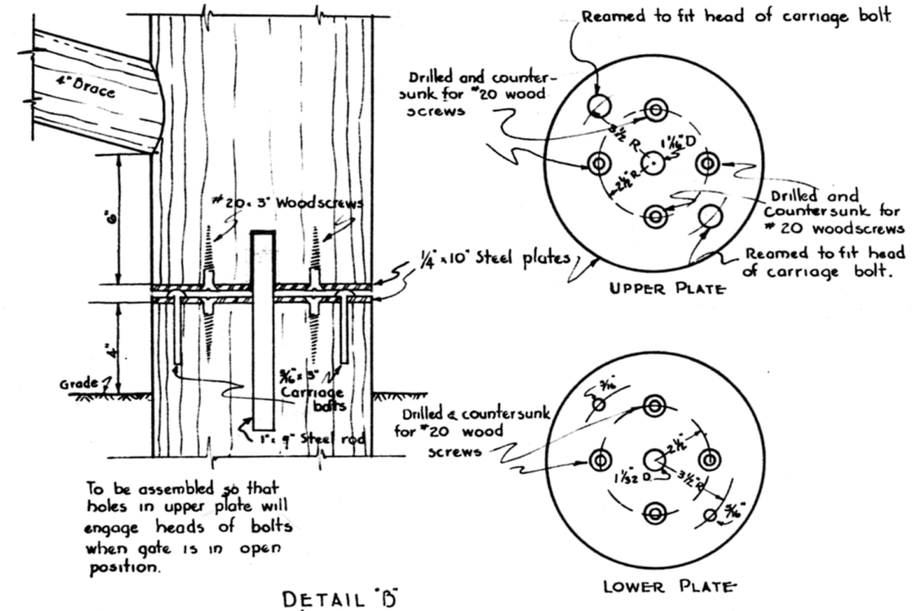

To be assembled so that holes in upper plate will engage heads of bolts when gate is in open position.

DETAIL "D"
Scale - 3" = 1'-0"

DETAIL "A"
Scale 3" = 1'-0"

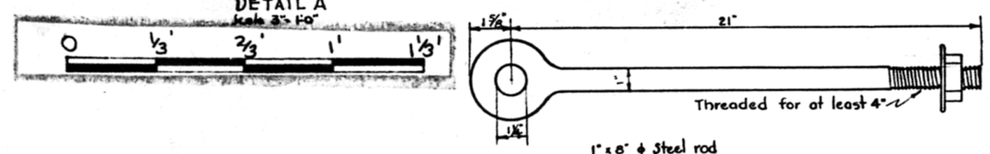

BILL OF MATERIALS

1	¼" x 2½" x 21"	Strap iron.
2	¼" x 10"	Circular steel plates.
1	1" x 22⅝"	Eye bar, threaded, with nut and washer.
2	1" x 8" ϕ	Steel Rods
2	⅜" x 18" ϕ	Steel Rods, Threaded one end, with nut and washer.
1	¾" x 3½"	Machine bolt.
8	#20 - 3"	Wood screws.
2	⅝" x 3"	Carriage bolts.

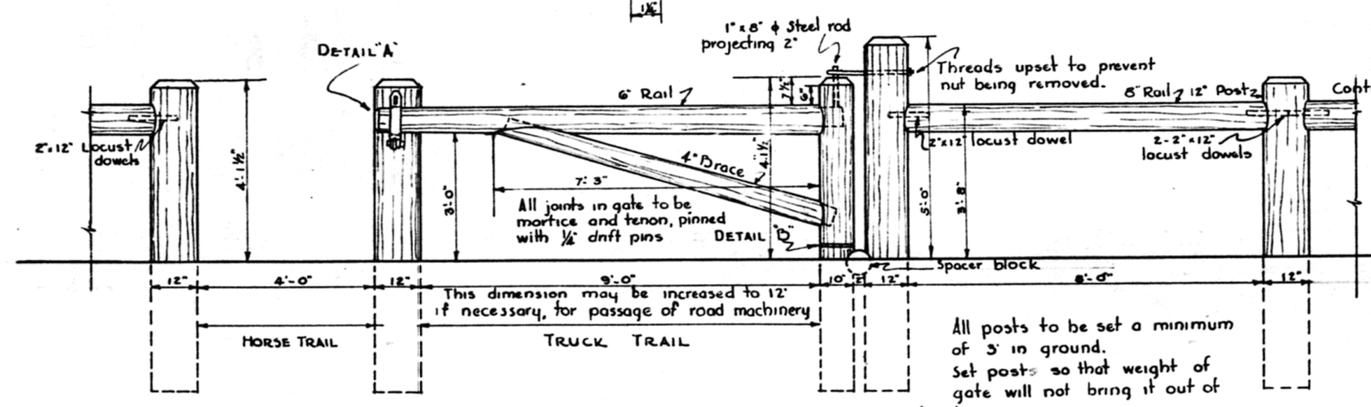

All posts to be set a minimum of 3' in ground.
Set posts so that weight of gate will not bring it out of line

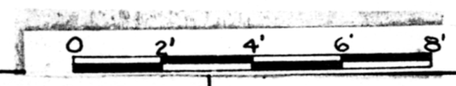

ELEVATION
Scale - ½" = 1'-0"

NOTES

Posts to be set not less than 3' in ground. All posts to be thoroughly treated with hot tar to 4" above grade before setting. All exposed wood to be painted with colorless creosote. All joints to be sealed with hot tar. All bolts and drift pins to be countersunk and holes plugged. All exposed timber ends to have 1½" Chamfer.

In locations where extra protection is needed, run ⅛"x1½ iron straps on upper and lower side of gate log and sides of posts
Iron collars may be used to further increase strength of gate post at ends.

ORIGINAL DRAWING NRGSM 3029
6-18-37
DRAWN BY HBS | TRACED BY DTP | CHECKED

U. S. DEPARTMENT OF THE INTERIOR
NATIONAL PARK SERVICE
BRANCH OF PLANS AND DESIGN

NAME AND LOCATION OF PROJECT
TRUCK TRAIL BARRIER
NAME OF PARK OR MONUMENT
GREAT SMOKY MOUNTAINS NATIONAL PARK

RECOMMENDED	W. G. Carnes	5/25/37
CLEARED FOR ENGINEERING	John R. Cross	6/21/37
CONCURRED	[illegible]	5/24/37
APPROVED	[illegible] Director	6-29-37

DRAWING NO. ND-GSM 2052
SHEET 1 OF 1 SHEETS

HALF-SIZE REPRODUCTION

133/2052

TRIM LINE

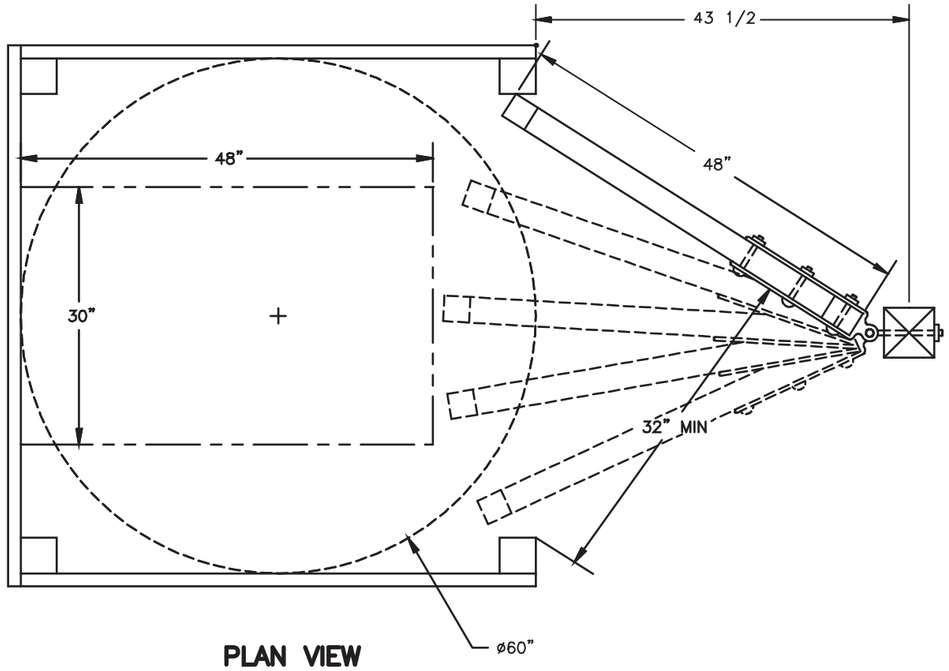

PLAN VIEW

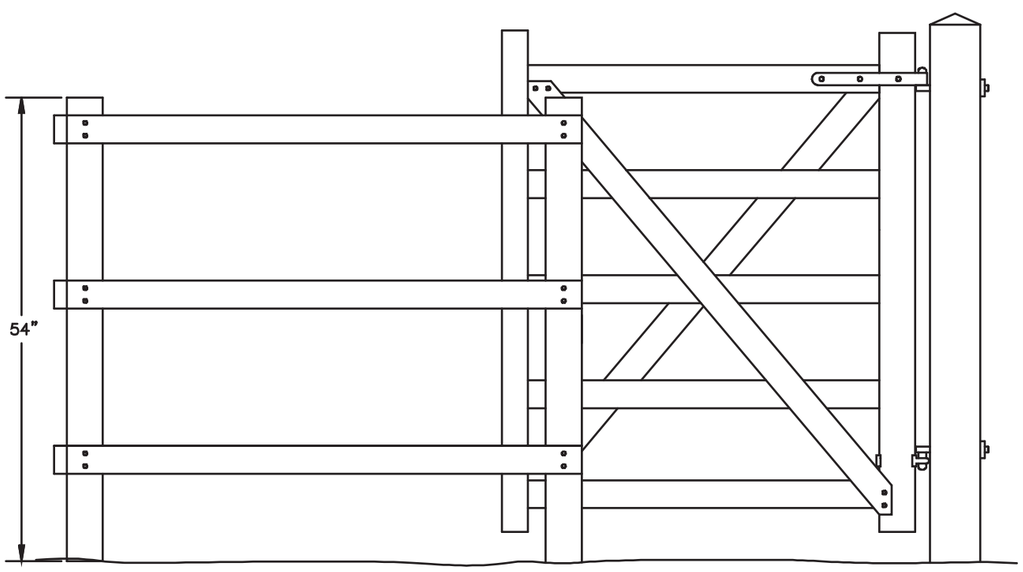

ELEVATION VIEW

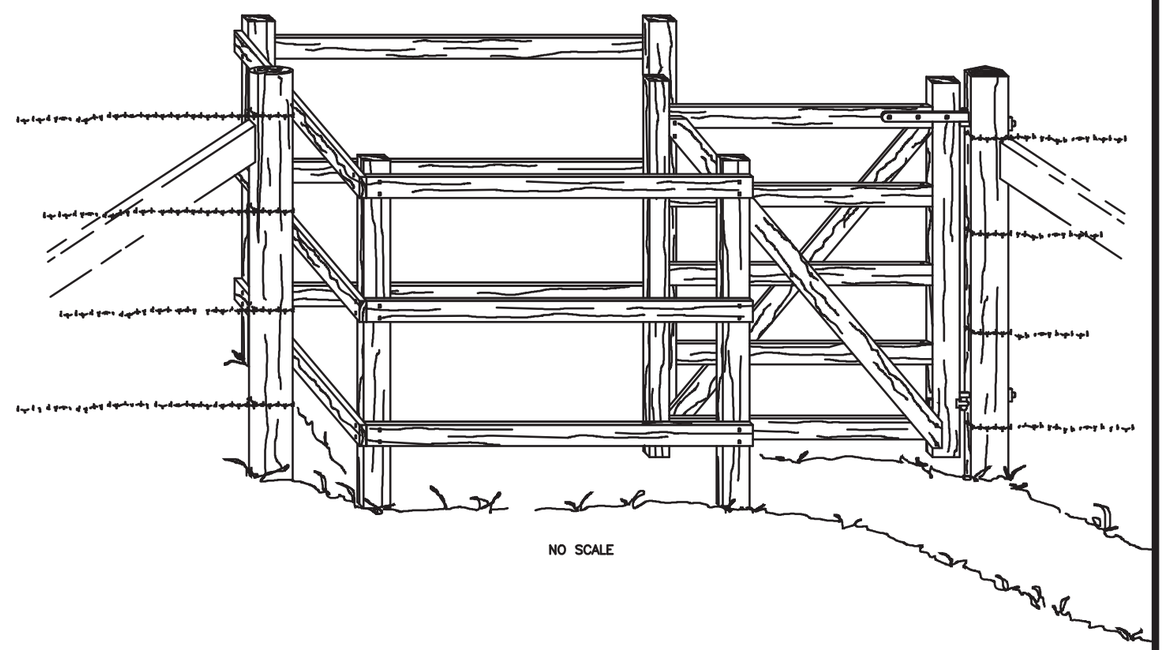

NO SCALE

NOTES:

1 INSIDE DIMENSIONS ARE MINIMUM CLEAR DISTANCES REQUIRED TO MEET ACCESSIBILITY STANDARDS.

2 THESE DRAWINGS ARE TYPICAL DRAWINGS AND MAY REQUIRE MINOR MODIFICATION FOR INSTALLATION.

UNLESS OTHERWISE SPECIFIED TOLERANCES: FRACTIONS +/- ____ DECIMALS +/- ____ ANGLES +/- ____ DIMENSIONS ARE IN INCHES BREAK SHARP EDGES	DATE	REVISION	BY
	U. S. DEPT. OF AGRICULTURE FOREST SERVICE TECHNOLOGY & DEVELOPMENT CENTER MISSOULA, MONTANA	
DRAWN D.MUCCI	TITLE	
DESIGNED X	TIMBER KISSING GATE	
CHECKED J.GROENIER	FOR WHEELCHAIR ACCESSIBILITY	
APPROVED J.GROENIER		
SCALE 1/8 & NOTED X		
DATE NOV 2005	SHEET X OF X	MTDC– X

REC49-01

MATERIAL LIST

ITEM NO.	PART OR ASSEMBLY NOMENCLATURE	NO. REQ'D.	MATERIAL OR DESCRIPTION	SHT
1	POST	3	10" DIA. CCA TREATED POST 6' LONG	
2	PIPE RAIL	AR	4-7/16" GALV. STEEL PIPE (4" ID)	
3	ANCHORS	9	STEEL ROD, 5/8" DIA x 16" LG	
4	FOOTINGS	3	MIXED CONCRETE BAGS X 100 #	

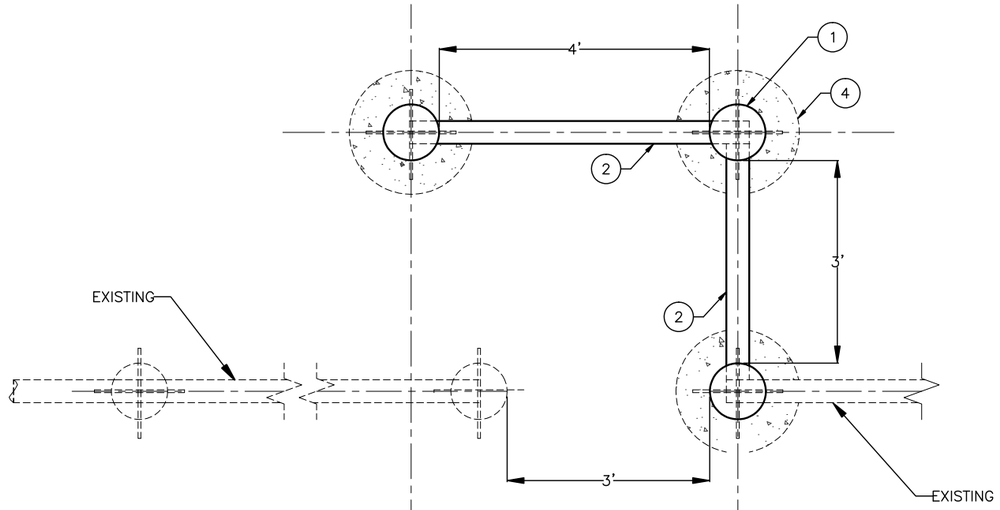

PLAN VIEW

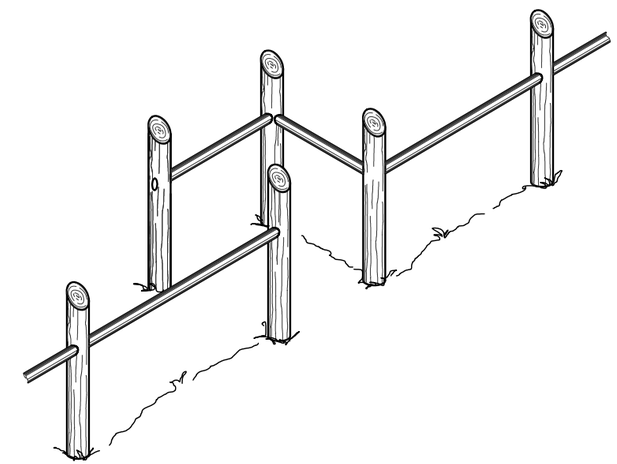

ISOMETRIC VIEW

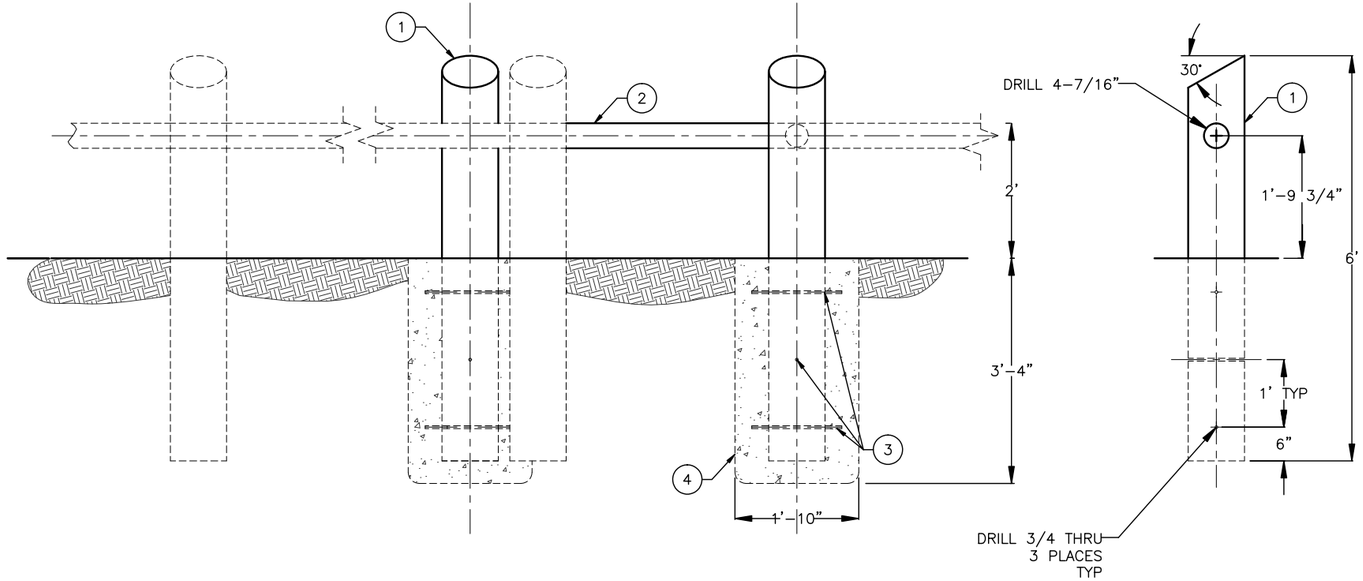

ELEVATION VIEW

NOTES:

1. SALVAGED WELL CASING MAY BE USED IN PLACE OF GALVANIZED PIPE RAILS. (SHOWN IN THE DRAWING). ADJUST THE HOLE IN THE POSTS TO 3 7/8" DIAMETER IF WELL CASING IS USED. AN OUTFITTING COMPANY MAY HAVE INFORMATION ON SALVAGED PIPE.
2. PIPE JOINTS TO BE 20' IN LENGTH AND JOINED BY WELDING TO CREATE A CONTINUOUS RUN THROUGH POSTS.
3. ON THE END RAILS, RAILS SHOULD END IN THE CENTER OF THE POST.
4. THE 4' RAIL SECTION IS NECESSARY TO HELP BLOCK MOTORCYCLE ENTRY.

GENERAL NOTES

1. UNLESS OTHERWISE SPECIFIED TOLERANCES ON DIMENSIONS ARE TO BE AS FOLLOWS:
   DECIMAL ± .010
   FRACTIONAL ± 1/16
   ANGLES ± 1/2
2. REMOVE ALL BURRS AND SHARP CORNERS.
3. DO NOT SCALE DRAWING.
4. MAKE NO SUBSTITUTION OF MATERIALS OR ALTERATION OF DIMENSIONS WITHOUT PRIOR WRITTEN APPROVAL BY THE TECHNOLOGY AND DEVELOPMENT CENTER.

U.S. DEPARTMENT OF AGRICULTURE
FOREST SERVICE
TECHNOLOGY & DEVELOPMENT CENTER
SAN DIMAS, CALIFORNIA 91773

KISATCHIE NATIONAL FOREST
EVANGELINE RANGER DISTRICT
LORAN SITE TRAFFIC CONTROL BARRIER

REV	ZONE		DESCRIPTION	DATE	BY	CHK

DRAWN BY M.M.Damole CHKD. BY EU DATE 9-9-05
REVIEWED BY ELLEN EUBANKS DATE 9-9-05
APPROVED D. Meadows DATE 9-9-05
SCALE Full DATE 9-9-05

DWG NUMBER REC49-01 REV 0
SHEET 1 OF 1

FY 05

REC48-01

MATERIAL LIST

ITEM NO.	PART OR ASSEMBLY NOMENCLATURE	NO. REQ'D.	MATERIAL OR DESCRIPTION	SHT
1	POST	10	TREATED PINE 10" DIA X 6'–0" LG	
2	PIPE RAIL	AR	GALV PIPE, 4" DIA x 20'–0" LG	
3	ANCHORS	30	STEEL ROD, 5/8" DIA x 16" LG	
4	FOOTINGS	10	MIXED CONCRETE (25) BAGS X 100 #	

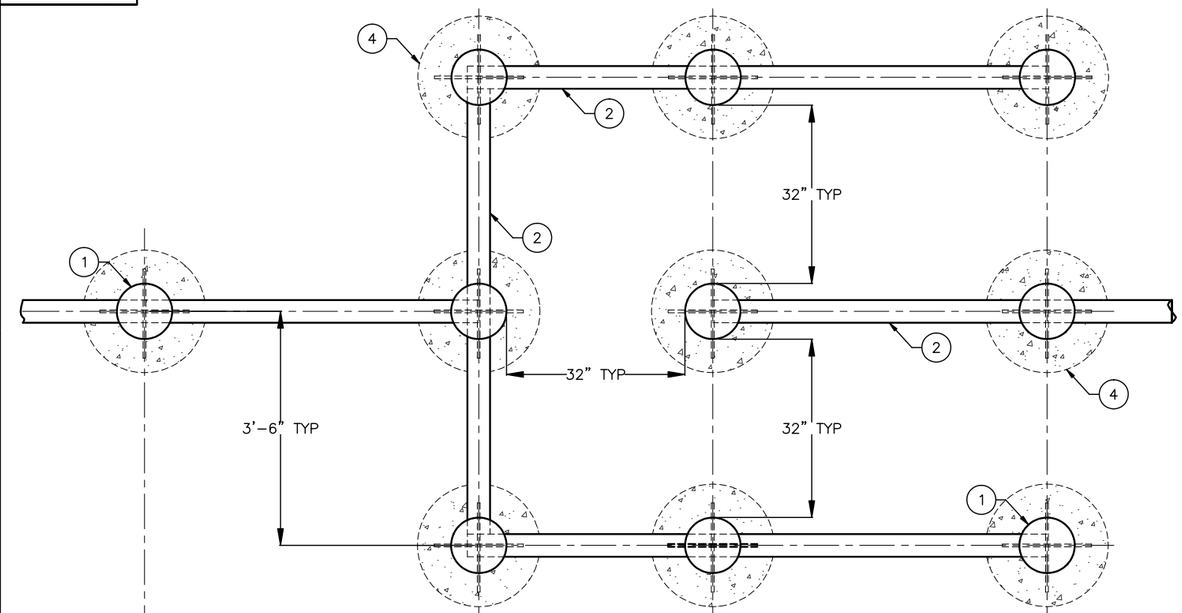

PLAN VIEW

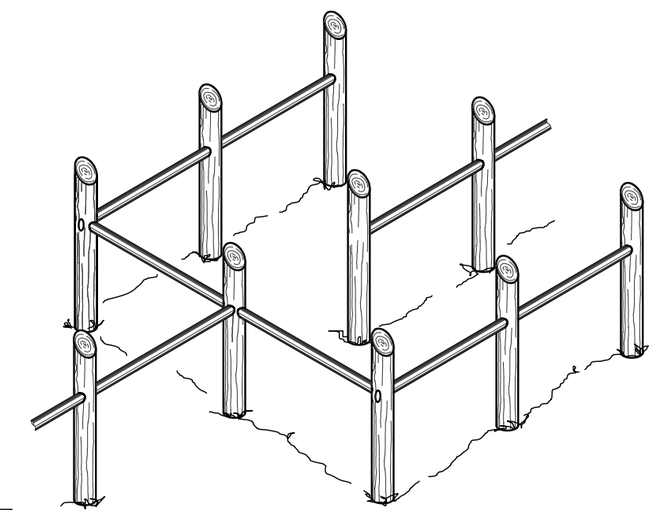

ISOMETRIC VIEW

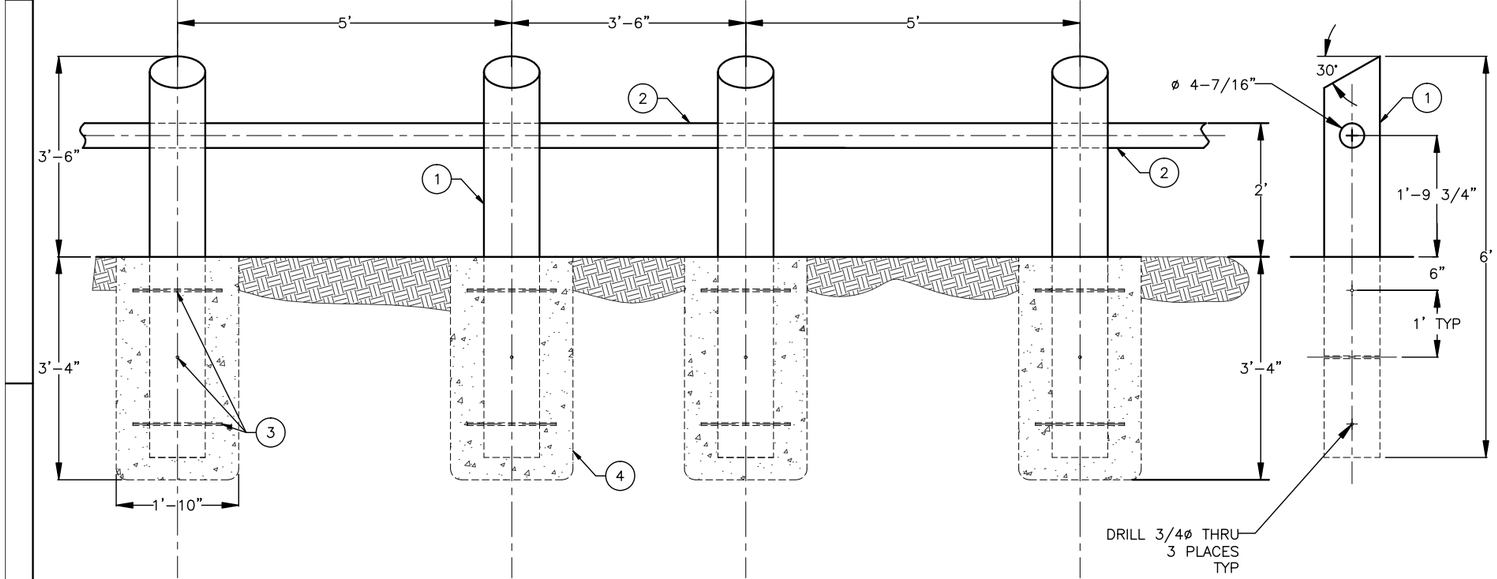

ELEVATION VIEW

1 ASSEMBLY

NOTES:

1. SALVAGED WELL CASING MAY BE USED IN PLACE OF GALVANIZED PIPE RAILS. (SHOWN IN THE DRAWING). ADJUST THE HOLE IN THE POSTS TO 3 7/8" DIAMETER IF WELL CASING IS USED. AN OUTFITTING COMPANY MAY HAVE INFORMATION ON SALVAGED PIPE.
2. TO MAKE A TALLER BARRIER WITH TWO RAILS MAKE THE POSTS 4'–4" TALL WITH RAILS AT 1'–4" AND AT 2'–0".
3. ON THE END RAILS, RAILS SHOULD END IN THE CENTER OF THE POST.

GENERAL NOTES

1. UNLESS OTHERWISE SPECIFIED TOLERANCES ON DIMENSIONS ARE TO BE AS FOLLOWS:
   DECIMAL ± .010
   FRACTIONAL ± 1/16
   ANGLES ± 1/2
2. REMOVE ALL BURRS AND SHARP CORNERS.
3. DO NOT SCALE DRAWING.
4. MAKE NO SUBSTITUTION OF MATERIALS OR ALTERATION OF DIMENSIONS WITHOUT PRIOR WRITTEN APPROVAL BY THE TECHNOLOGY AND DEVELOPMENT CENTER.

U.S. DEPARTMENT OF AGRICULTURE
FOREST SERVICE
TECHNOLOGY & DEVELOPMENT CENTER
SAN DIMAS, CALIFORNIA 91773

U–TURN BARRIER – NONACCESSIBLE

REV	ZONE	DESCRIPTION	DATE	BY	CHK

DRAWN BY M.M.Damole CHKD. BY EU DATE 9–9–05
REVIEWED BY ELLEN EUBANKS DATE 9–9–05
APPROVED D. Meadows DATE 9–9–05
SCALE Full DATE 9–9–05

DWG NUMBER REC48–01 REV 0
SHEET 1 OF 1

FY 05

GUARDRAILS

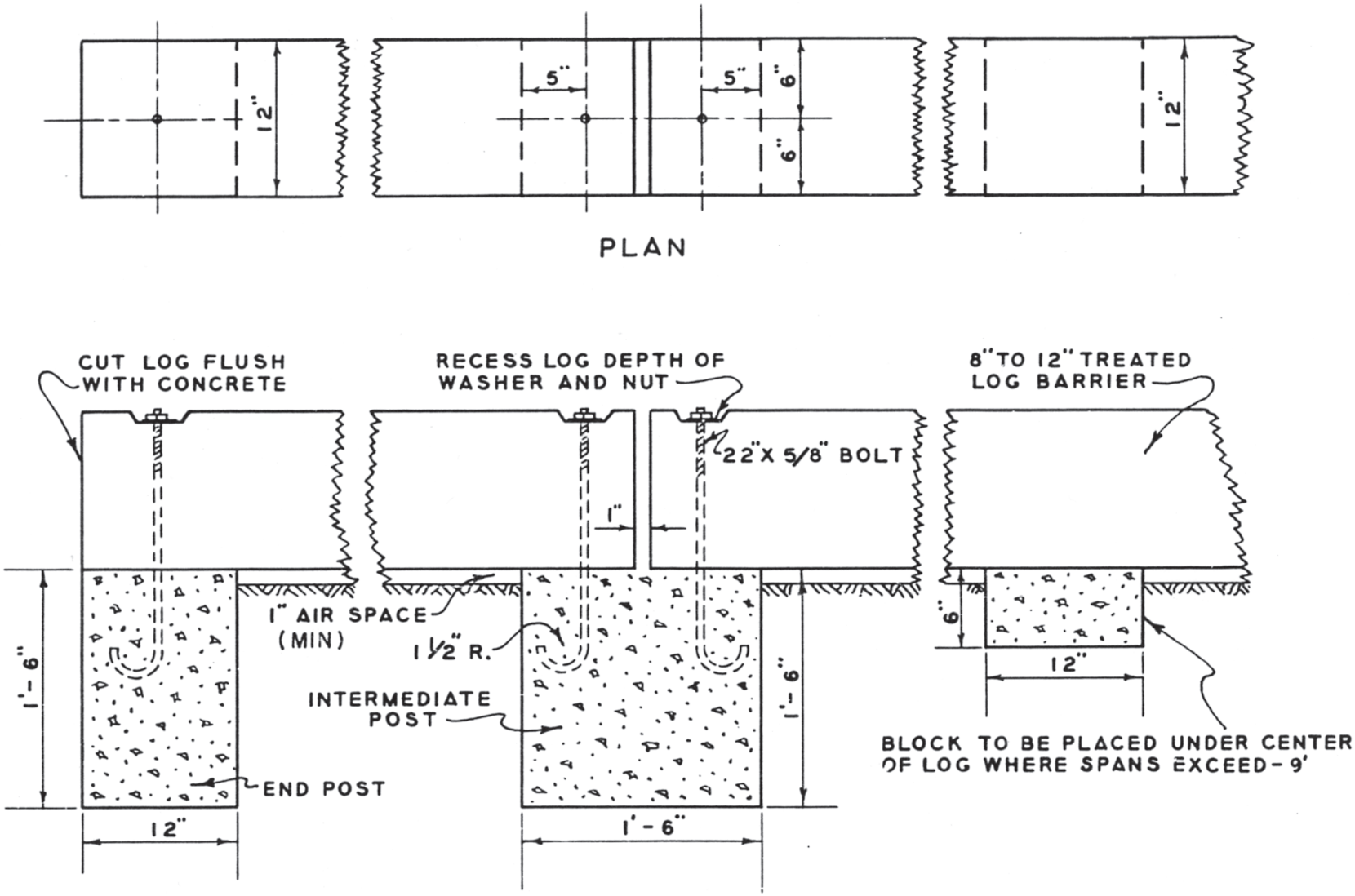

CONCRETE ANCHOR POSTS & BARRIER LOGS

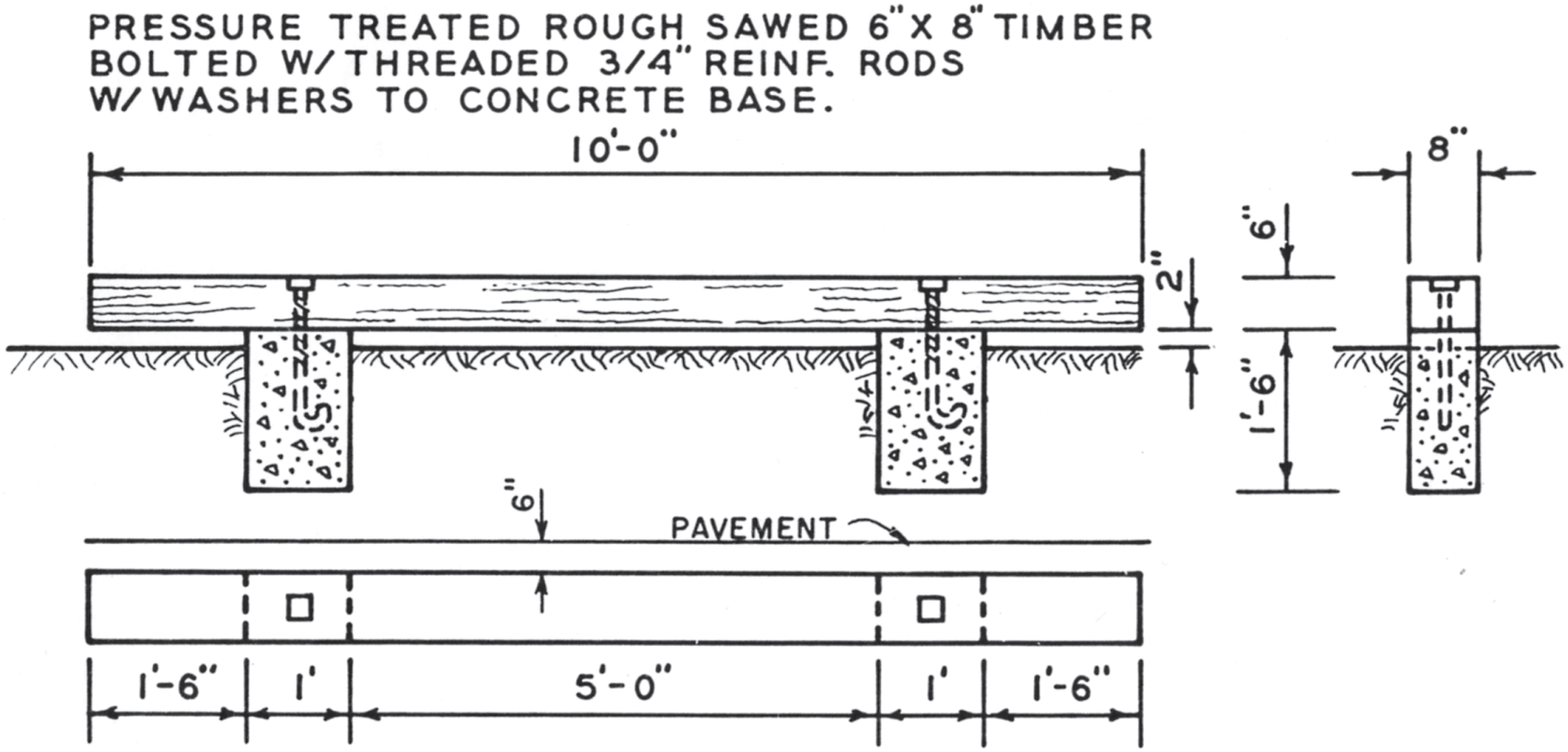

TIMBER BARRIER W/ CONCRETE ANCHOR POST

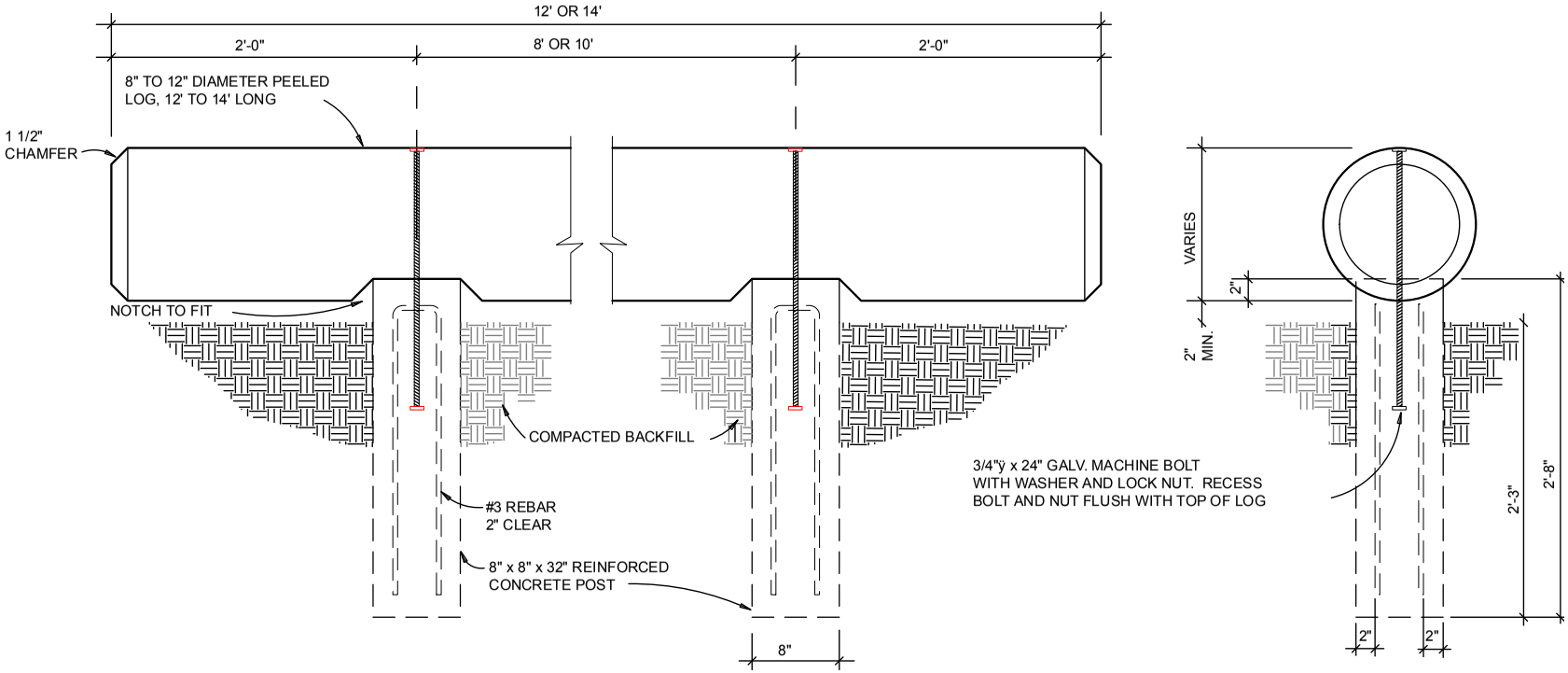

FRONT ELEVATION

SIDE ELEVATION

LOG BARRIER

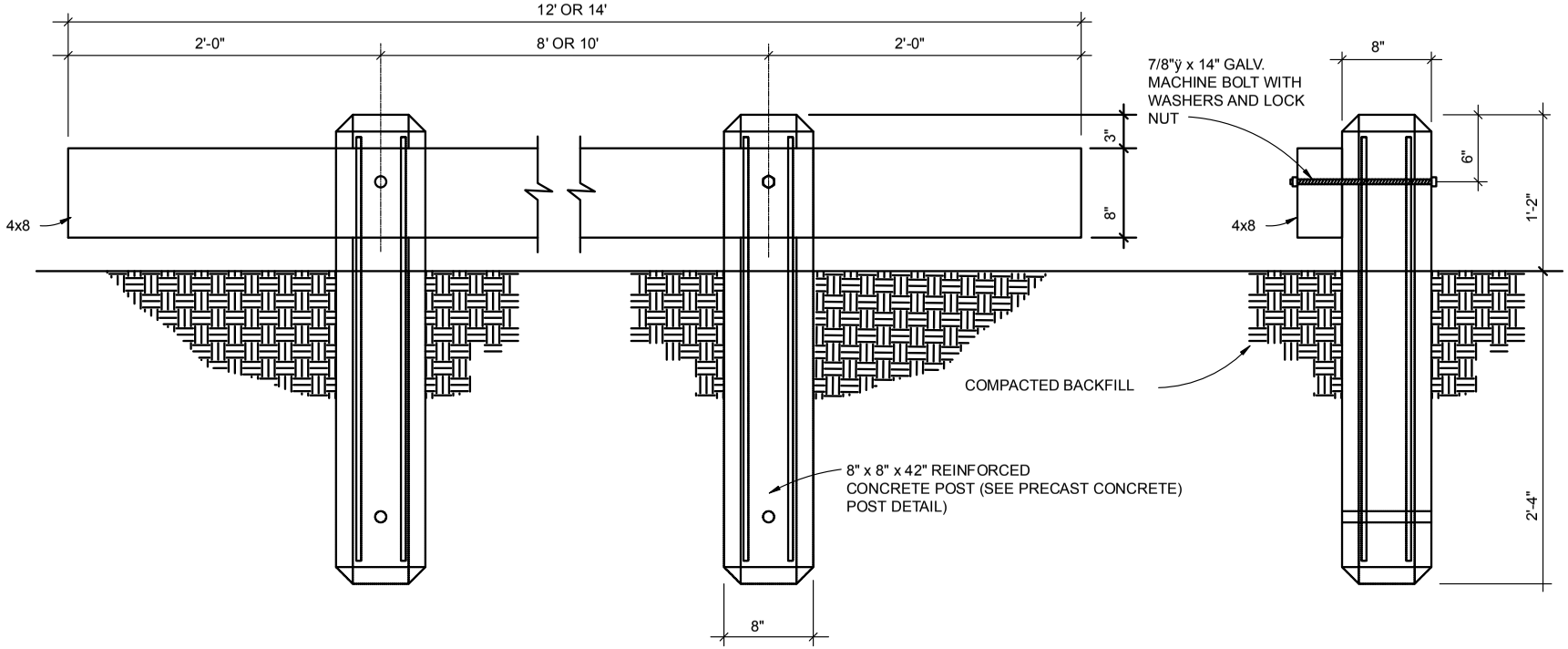

FRONT ELEVATION

SIDE
ELEVATION

SAWED TIMBER GUARD - RAIL TYPE BARRIER

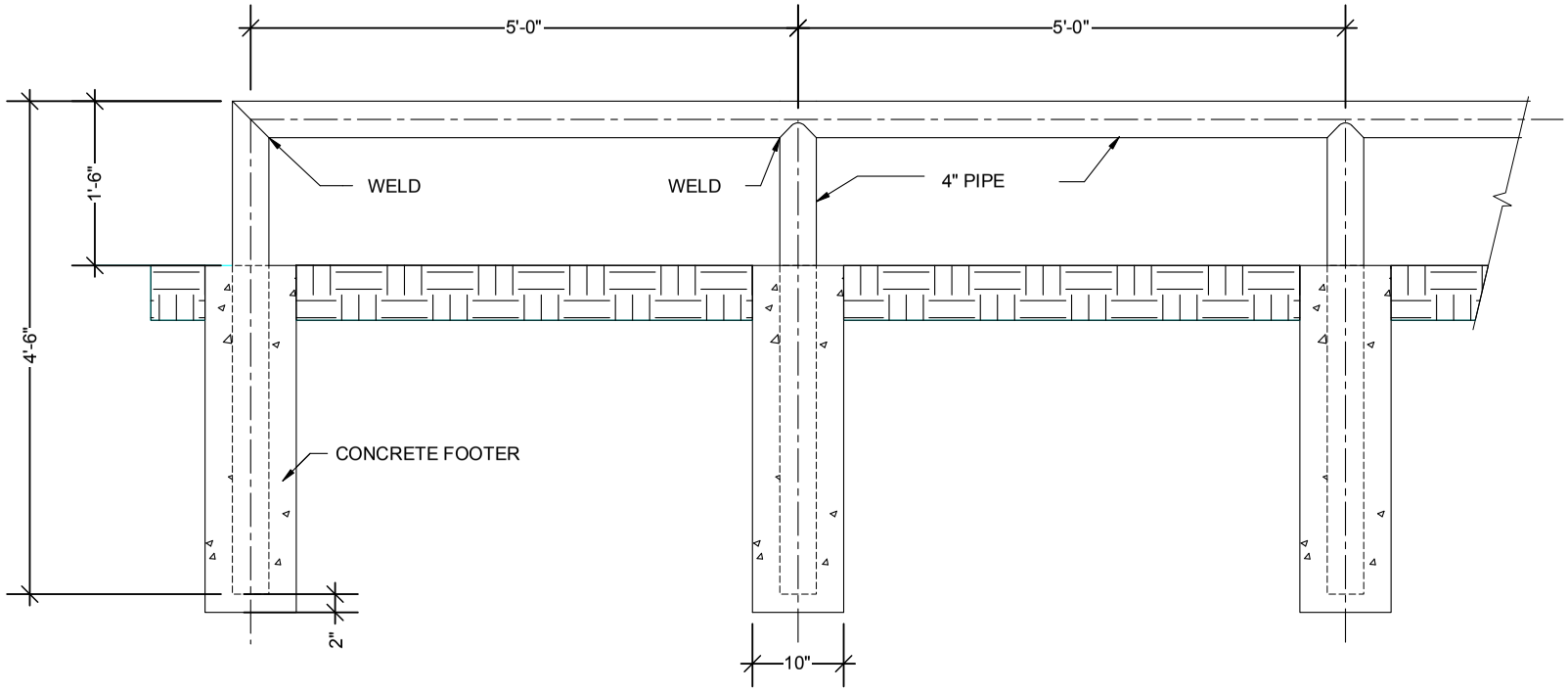

PIPE RAIL

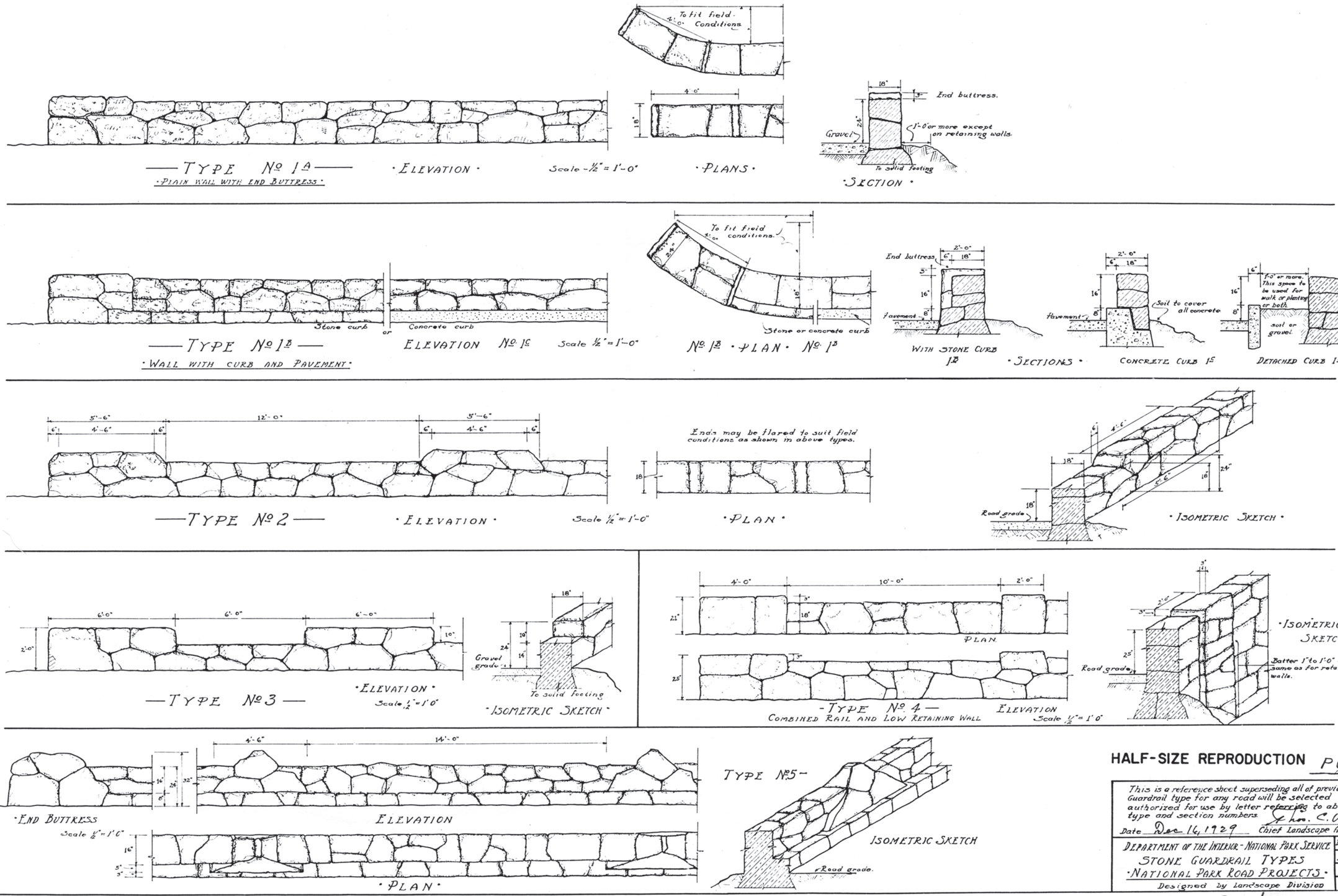

HALF-SIZE REPRODUCTION PG-20

This is a reference sheet superseding all of previous date. Guardrail type for any road will be selected and authorized for use by letter referring to above type and section numbers.

Date Dec 16, 1929 — Thos. C. Vint, Chief Landscape Architect

DEPARTMENT OF THE INTERIOR - NATIONAL PARK SERVICE

STONE GUARDRAIL TYPES

NATIONAL PARK ROAD PROJECTS

Designed by Landscape Division

Date 9/30/29

Dr. by E.A.D.

Tr. by W.E.M.

Ck. by.

971/20

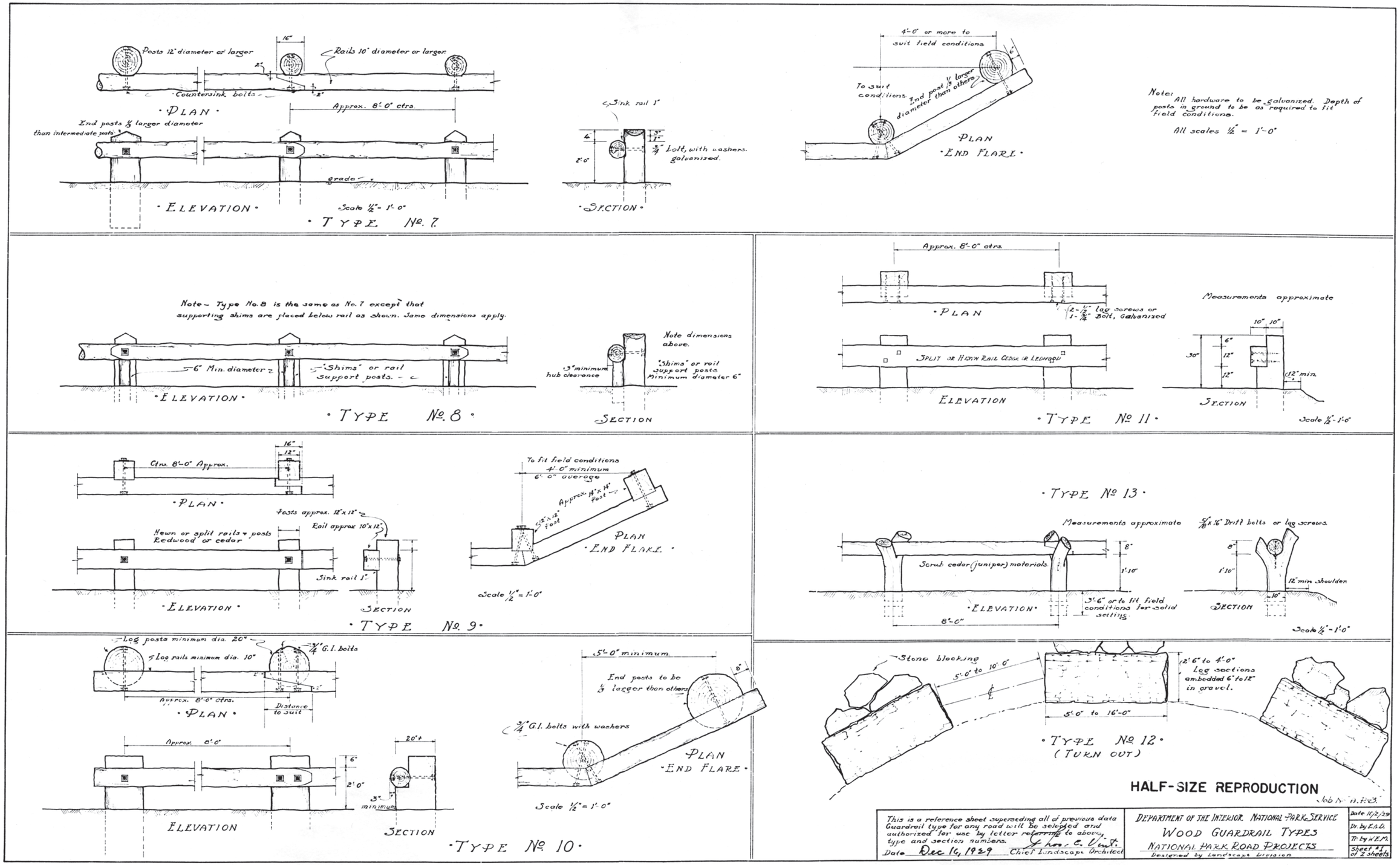

HALF-SIZE REPRODUCTION

Job No. A.P.3.

This is a reference sheet superseding all of previous data. Guardrail type for any road will be selected and authorized for use by letter referring to above type and section numbers.

Date Dec 16, 1929 — Chief Landscape Architect

DEPARTMENT OF THE INTERIOR NATIONAL PARK SERVICE

WOOD GUARDRAIL TYPES

NATIONAL PARK ROAD PROJECTS

Designed by Landscape Division

Date 10/2/29 — Dr. by E.A.D. — Tr. by W.E.M. — Sheet #1 of 2 sheets

971/3 1 of 3

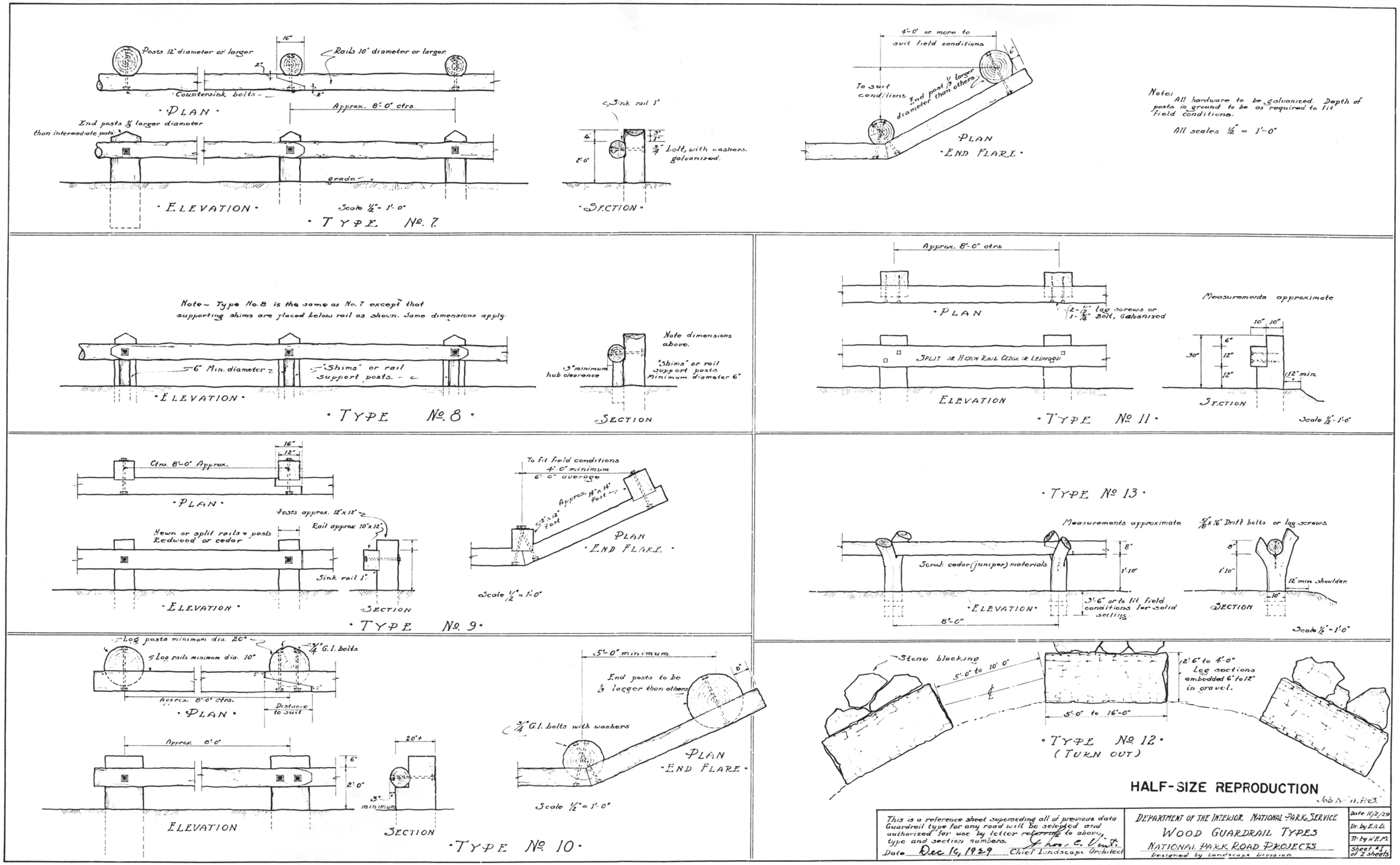

HALF-SIZE REPRODUCTION

Job No. A.P.3.

This is a reference sheet superseding all of previous data. Guardrail type for any road will be selected and authorized for use by letter referring to above type and section numbers.

Date Dec 16, 1929 — Chief Landscape Architect

DEPARTMENT OF THE INTERIOR NATIONAL PARK SERVICE

WOOD GUARDRAIL TYPES

NATIONAL PARK ROAD PROJECTS

Designed by Landscape Division

Date 10/2/29 — Dr. by E.A.D. — Tr. by W.E.M. — Sheet #1 of 2 sheets

971/3 1 of 3

61

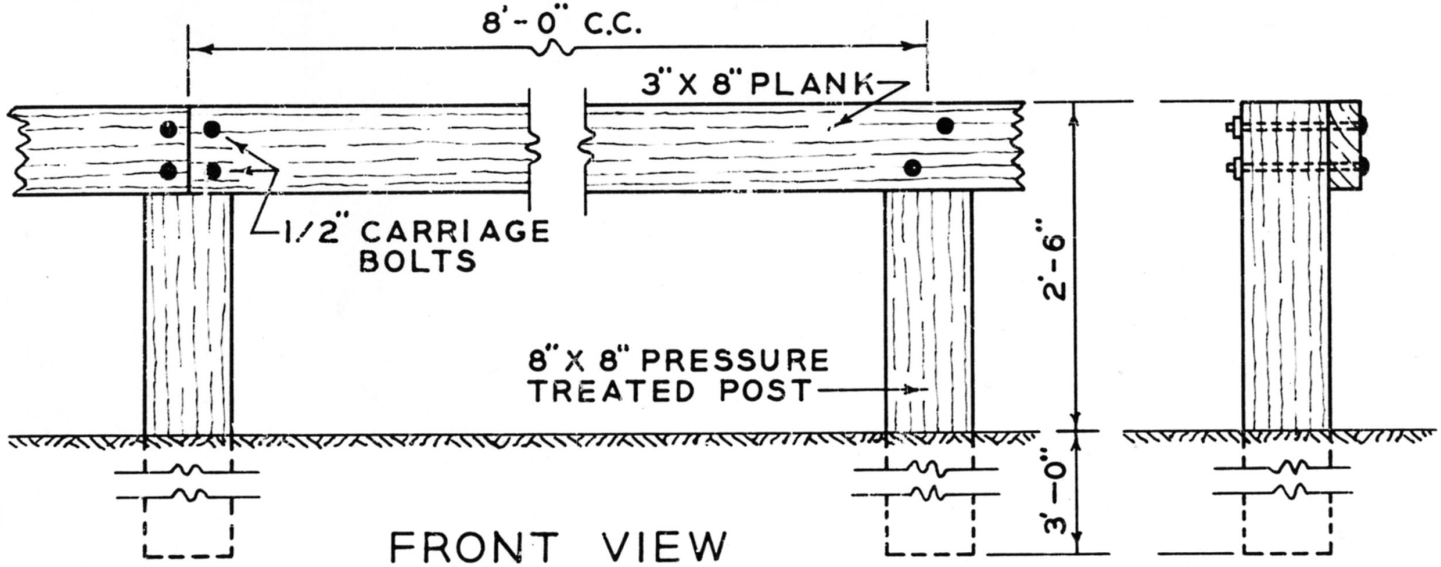

FRONT VIEW
SQUARE POSTS

END VIEW

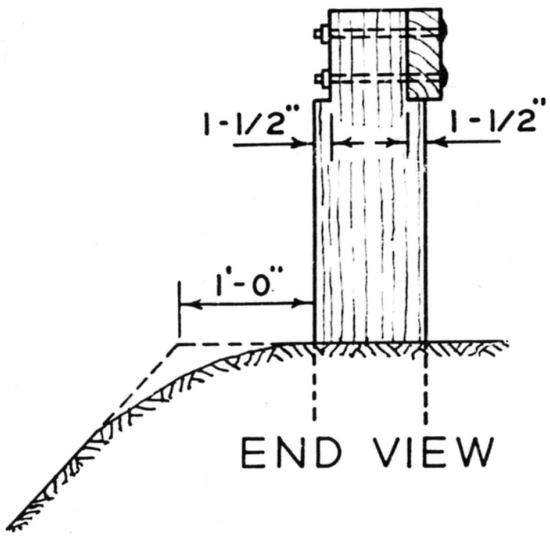

END VIEW

ALL ROUND POSTS SHALL BE NOTCHED ON BOTH SIDES & PRESSURE TREATED

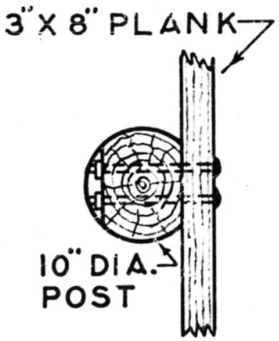

PLAN

ROUND POSTS

WOOD GUARD RAIL

971/R-151

SIZE 8 X 10½

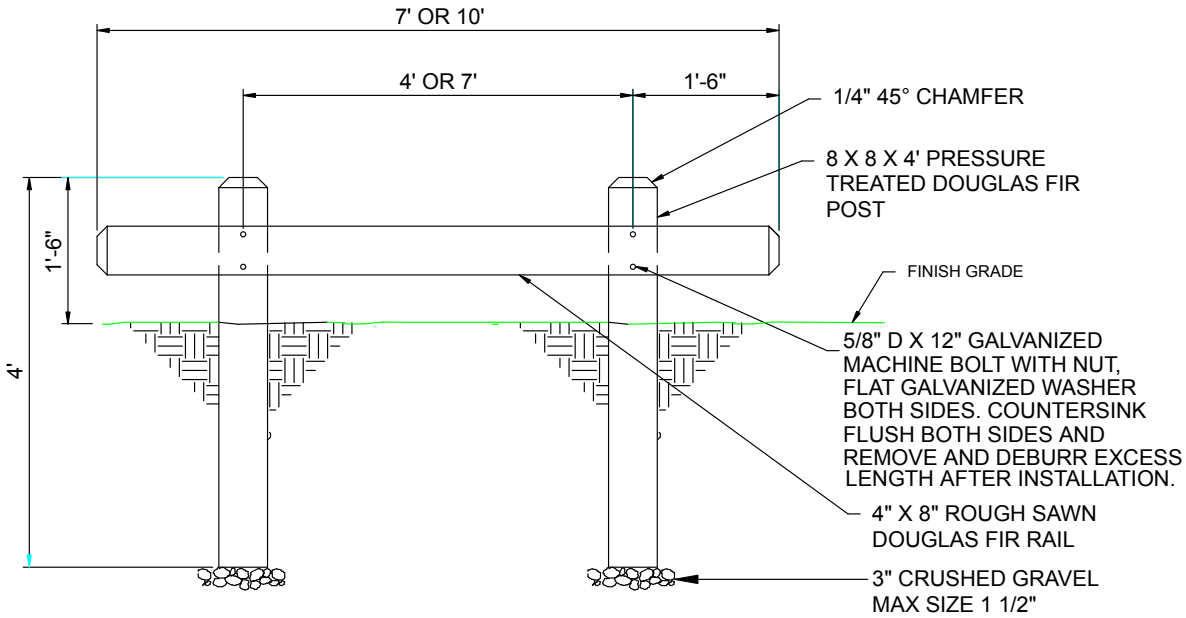

FRONT ELEVATION

NOTES:

OPTIONAL 8"-10" POLE. NOTCH POLE 3" TO FIT POST. 1 1/4" 45° CHAMFER ON ENDS. STAIN ALL WOOD MEMBERS TO MATCH DESIGN THEME OR ENVIRONMENT.

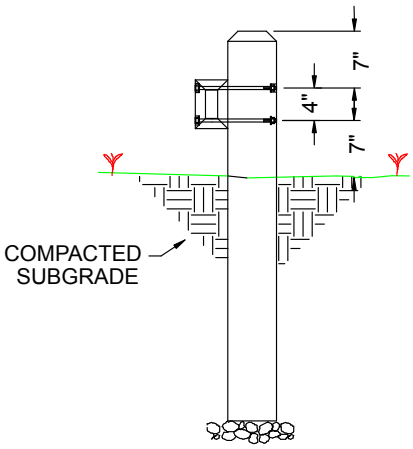

RIGHT ELEVATION

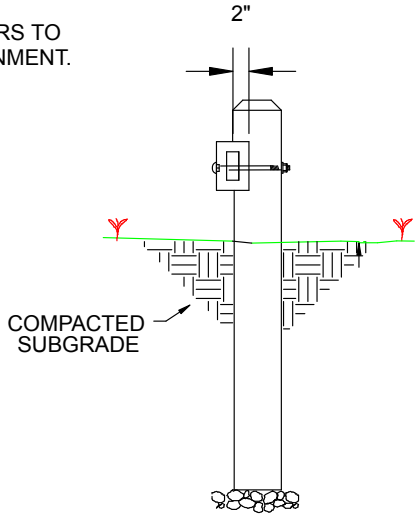

OPTIONAL ATTACHMENT

WOOD RAIL BARRIER

NO-DIG BARRIERS

Jeff Applegate, Mendocino National Forest
(William Applegate/R5/USDAFS)

The no-dig barrier is a guardrail type barrier that is prefabricated, set into place, and then secured with rebar. The barrier is simple to build and simple to install, and save time and therefore money. Inmate labor has built up to 100 units in a day and has installed up to 120 units in one day. This type barrier is especially good when working around or in archeological sites due to the minimum ground disturbance. There has been very little vandalism or removal of this type barrier. (See figure 29.)

Figure 29.

Materials and Tools

Construct the no-dig barrier from railroad ties. Purchase the railroad ties in bulk for about $9 each from a lumber yard.

Materials

- Standard railroad ties, #1 or relay grade
- Pressure-treated 8-inch by 8-inch by 8- or 10-foot long Hem-Fir or Douglas-fir posts
- 5/8-inch steel rebar in 20-foot lengths

Tools

- Chain saw
- Cutting torch
- Heavy-duty drill (1/2 horsepower)
- 5/8-inch bell-hangers drill bit
- Sledge hammer
- Stringline
- Drilling template

Assembly

1. Cut the 8-inch by 8-inch pressure-treated wood (Hem-Fir) into 12-inch lengths using a chain saw. Yield is 8- to 10-support blocks.
2. Cut rebar into 30-inch lengths. Yield is 8 units per 20-foot stick.
3. Use a simple drilling template; set the railroad ties on top of the 8- by 8- by 12-inch blocks, which are placed lengthwise in the template with the outside edge of the block 12 inches from the end of the railroad tie (12.6 inches) on center.
   a. The template consists of two plywood squares with a framed “bunk” to hold the 12-inch long lengths of pressure treated Hem-Fir support blocks. Once the blocks are cut to length they are put in the bunks on the two properly spaced templates. A railroad tie is place on top of the two Hem-Fir blocks. The templates allow for a one foot extension of the railroad tie beyond the outside edges of the two Hem-Fir blocks. Once the railroad tie is in the proper position, the tie and the support block are vertically drilled on center with a 5/8-inch diameter bell hangers bit. After drilling, a 30-inch piece of 5/8-inch rebar is pounded down through the hole in the railroad tie and the block, stopping at ground level.

4. Drill through the railroad tie and the pressure treated blocks with the 5/8-inch drill bit.
5. Pound a 30-inch stick of rebar through the railroad tie and block with a sledge hammer until flush with the bottom on the block. This will leave about 12 to 14 inches of rebar sticking out of the lumber. (See figure 30.)

Figure 30.

At this point the no-dig barriers are ready to transport on a trailer to the jobsite.

Installation

1. Transport the barriers to the jobsite.
2. Use a stringline to lineup the barriers. (This step may not be necessary.)
3. Lineup the barriers with Hem-Fir blocks are in contact with the ground.
4. Use an 8- to 20-pound sledge hammer to pound the 12- to 14-inch length of rebar into the ground until flush with the top of the railroad tie.
5. Simple eyeballing and a little leveling with a McLeod results in a finished product. (See figures 31 and 32.)

Figure 31.

Figure 32.

When in use, if a barrier is backed over or moved out of place by frost heave use a digging bar as a lever to right the barrier. Barriers can be jacked out with a jack and, unless the rebar is badly bent, they can be easily reinstalled.

LARGE ROCKS

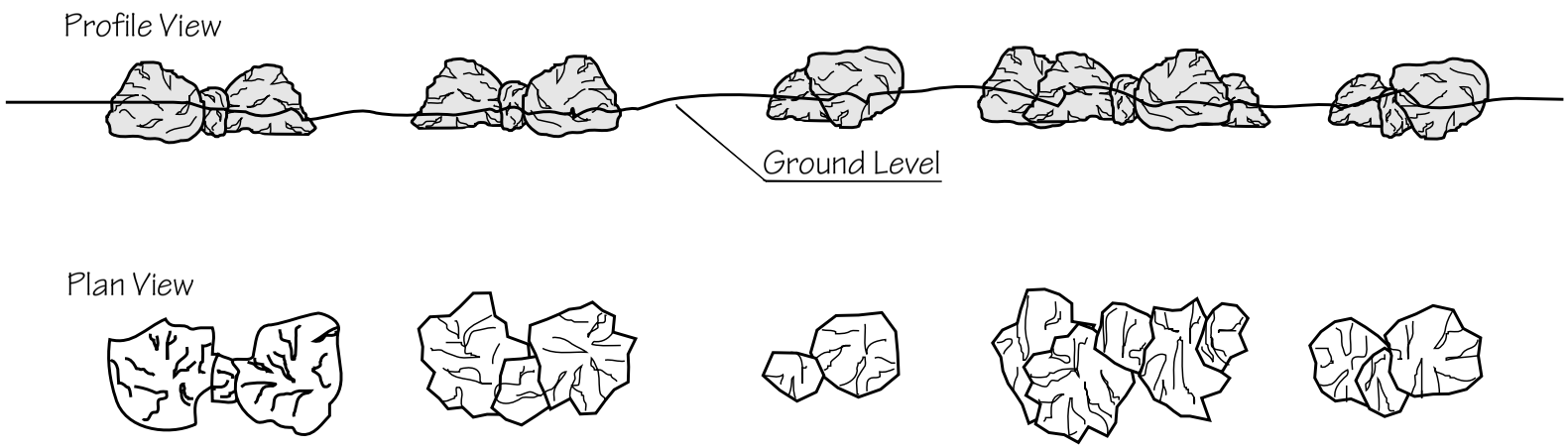

Rock Barriers

DEFINITIONS

Recreation Opportunity Spectrum (ROS) classification

The USDA Forest Service uses the Recreation Opportunity Spectrum (ROS) to inventory and classify National Forest System lands. The range of recreational experiences, opportunities, and settings available on a given area of land is classified through the ROS. Classifications include: Primitive, Semiprimitive-Nonmotorized, Semiprimitive-Motorized, Roaded Natural, Rural, and Urban. The USDA Forest Service typically plans and manages for recreational experiences through the application of the ROS. The ROS is a framework for inventorying, planning, and managing the recreational experience and setting.

The public perceives recreation as more than just camping, fishing, and hiking. Research has shown that people choose a specific setting for each of these activities in order to realize a desired set of experiences. For example, hiking on a natural-surfaced trail in a remote setting with few facilities may offer some visitors a sense of solitude, challenge, and self-reliance. In contrast, a hard-surfaced, interpretive, loop trail in an area with facilities and amenities may offer more comfort, security, and social opportunities for other visitors. Maintaining a spectrum of these classes is very important to provide people with choices. See http://216.239.63.104/search?q=cache:RxHC6ZiIu8YJ:www.fs.fed.us/mntp/plan/LRMP-D.pdf+recreation+opportunity+spectrum&hl=en.

Built Environment Image Guide (BEIG)

The built environment, as used in this publication, refers to the administrative and recreation buildings, landscape structures, site furnishings, structures on roads and trails, and signs installed or operated by the USDA Forest Service, its cooperators, and permittees.

The elements of the built environment constructed on national forest lands and grasslands, or those used for administrative purposes in rural areas, towns, and cities, shall—to the extent practicable—incorporate the principles of sustainability, reflect their place within the natural and cultural landscape, and provide optimal service to our customers and cooperators. These elements will:

- Be located, planned, and designed with respect for the natural systems in which they reside
- Aesthetically integrate their natural, cultural, and experiential context
- Contain design elements, including appropriate signs that reinforce a national agency identity
- Emphasize efficiency of energy and materials consumption in construction and operation
- Serve as premier examples to interpret conservation of natural resources and sustainable development
- Create environments for people to enjoy and gain increased appreciation for the natural environment and in which employees work productively, experiencing the connection to the resources they manage

In so doing, the USDA Forest Service built environment will strengthen and reinforce the image of the agency as an international conservation leader. See http://fsweb/beig/BEIG_Training/default.htm.

WEB SITES

U.S. Department of Agriculture, Forest Service, Missoula Technology and Development Center. 2003. Sign installation guide.
http://fsweb.mtdc.wo.fs.fed.us/php/library_card.php?p_num=0371%202812.
(Scroll down to Field Implementation, click on ATM Signing.) (26 May 2006).

U.S. Department of Agriculture, Forest Service. 2002. Midewin national tallgrass prairie.
http://www.fs.fed.us/mntp/plan/index.htm.
(Scroll down to Prairie Plan, appendixes, D – Recreation Opportunity Spectrum.) (26 May 2006).

U.S. Department of Agriculture, Forest Service. 2005. Sign and poster guidelines for the Forest Service.
http://fsweb.wo.fs.fed.us/eng/roads_trails/signs_os/index.htm.
(See chapter 6 for specifics using the "Road Closed" sign.)

U.S. Department of Agriculture, Forest Service, Northern Regional Office. Access and travel management.
http://fsweb.r1.fs.fed.us/e/access_and_travel_mgmt/atm_index.shtml.
(Scroll down to Field Implementation, click on ATM Signing.) (26 May 2006).
http://fsweb.wo.fs.fed.us/rhwr/ohv/index.shtml

U.S. Department of Agriculture, Forest Service. 2006. Built environment image guide training. (San Dimas Technology and Development Center.)
http://fsweb/sdtdc.wo.fs.fed.us/programs/rec/beig/BEIG_Training/default.htm.
(26 May 2006).

U.S. Department of Agriculture, Natural Resources Conservation Service. 2006. Delaware standard engineering drawings.
http://www.de.nrcs.usda.gov/technical/technical_references/engineering/eng_drawings.html.
(26 May 2006).

U.S. Department of Transportation, Federal Highway Administration. 2003. Manual on uniform traffic control devices (MUTCD).
http://mutcd.fhwa.dot.gov/.
(26 May 2006).

Acknowledgements

SDTDC wishes to thank the following individuals for their review of this publication:

Scott Groenier, civil engineer,
USDA Forest Service,
Missoula Technology and Development Center.

Greg Napper, civil engineer,
USDA Forest Service,
San Dimas Technology and Development Center.

Don Trammell, USDA Forest Service,
Southwest Region,
Trails Unlimited Enterprise Unit.

SDTDC also extends thank yous to all the persons who shared their barrier drawings.

SDTDC's national publications are available at
http://www.fs.fed.us/eng/pubs.

U.S. Department of Agriculture, Forest Service and U.S. Department of the Interior Bureau of Land Management employees also can view SDTDC's videos, CDs, and individual project pages on their internal computer networks at:
http://fsweb.sdtdc.wo.fs.fed.us/.

TRAIL OHV-WIDTH LIMITER GATE AND NONMOTORIZED TRAIL BARRIERS

by Don Trammell, USDA Forest Service
Trails Unlimited Enterprise Unit

Use these barriers to narrow the width of a trail, thus limiting the type of off-highway vehicle (OHV) allowed on the trail (i.e., keep all-terrain vehicles (ATVs) off motorcycle-only trails) or as a barrier to OHVs on hiking and horse trails.

Trail OHV-width limiter and nonmotorized trail barrier structures can be assembled in several configurations to meet many trail management objectives. Prefabricate the components and then transport them to the installation site for assembly. Depending on the chosen structure, there may be no welding to do in the field. Prefabrication and no field welding are distinct advantages in remote locations.

Consider sight distance (particularly important on higher speed OHV trails) when locating a structure. Install barriers on a level or near level section of trail and provide a turn around area for excluded uses. In addition to making it easier to install the structure, level ground will minimize the impacts of braking and acceleration on the trail segments on each side of the structure. Tie barriers and gates to a fence or a substantial natural feature to prevent people from riding around them. Barriers are less likely to be vandalized in easily viewed locations, such as along side roads.

The left and right halves of the structure are identical in design with the exception of a plate attached to the right half (approach side). Attach a trail-use designation sign to the plate. Use retroreflective, stick-on signs to designate trail use. (See appendix B for sign requirements.)

Materials

Use 3-inch schedule 40 black iron pipe as a minimum. Corten tubing of similar dimensions also may be used to extend the lifespan of the structure. For either esthetics or in areas of high vandalism, use larger diameter pipe, schedule 80 pipe, or a combination of both. Use continuous welds on all joints and, to prevent a safety hazard, grind down all rough or jagged surfaces. Do not paint the gate; painting creates a long-term maintenance commitment. If the structure is painted, ensure that it contrasts with the background colors of the site so the barrier remains visible.

Use a cross-bar to close the trail to all uses (wet weather, fire danger, and so forth.) (See figure A1.) Slot the interior posts to accommodate a 3-inch by 1/2-inch bar approximately 30 inches above the ground line. Slot the exterior post on one side to accommodate the closure bar when the trail is open. The closure bar must be able to be locked in both the open and closed positions for safety reasons.

Figure A1. This width-limiter gate is closed to all traffic. The sides of the gate are attached to a wire fence.

Weld loops to the exterior posts (furthest from the trail centerline) and attach a wire fence to prevent users from going around the barrier. Chain links cut in half and welded to the post make excellent loops. Space loops every 4 inches to accommodate various fencing needs. Ensure that these loops do not have square edges so they do not cut the wire.

Anchoring posts makes them more difficult for vandals to remove. Drill 3/4-inch holes through the interior and exterior posts at 3 inches and at 6 inches from the bottom of the posts. The holes should go completely through the posts and be offset 90 degrees from each other. Insert pieces of rebar through holes for post anchors.

Nonmotorized Trail Barrier (Stock) Gate

There are four variations that change this gate from a width limiter gate to an OHV barrier. The base structure can be a width-limiter gate or a simple steel rail fence, as shown in the photographs. The variations allow pedestrians and stock to pass over a barrier. Contrast is especially important for visibility if the barrier is used as an OHV barrier and livestock will have to step over the cross-barrier. Place Type 3 object markers or reflective warning tape (red and white stripes) on the structure to warn vehicle users of the barrier's presence. To promote safe passage, post an informational sign that suggests leading (rather than riding) livestock through the structure.

Variation One

Insert a pipe cross-barrier approximately16 inches above the ground to create a single horizontal barrier. (An OHV must be lifted over the bar to gain access.) To create this barrier, cut a hole through interior (closest to the trail centerline) posts and insert the next smaller diameter pipe, forming a cross-barrier. This cross-barrier should fit snugly and not be able to be removed once the structure is buried or cemented in the ground. Ensure that the cross-barrier pipe is long enough to span the trail width and still fit securely into the barrier's side pieces. Done properly, no welding of the cross piece is necessary.

Variation Two

The second variation adds a U-shaped barrier on both sides of the structure to form a horizontal box. Weld nipples to each side of the interior post parallel to the trail, approximately16 inches above the ground. Each nipple should have an outside diameter sized to fit snugly into the pipe being used for the barrier portion. Fit the whole structure together before the side pieces are buried or cemented in the ground. No welding is necessary if a U-shaped barrier is used on both sides of the structure and the pieces are fitted together properly before being buried or cemented in the ground. If bolts are used to secure the U-shaped barrier pieces to the side pieces for additional strength, vertically insert the bolts to avoid creating a scraping hazard for users.

Construct a U-shaped barrier using a single bent tube for each side with one support leg, or using a welded 3-sided box with 2 support legs. The legs on the U-shaped barrier also should have rebar anchors.

Variation Three

The third variation adds one U-shaped barrier piece along with the cross barrier to crate a shorter box, however, welding is recommended when using this configuration to prevent the structure from being wiggled apart. This addition is to the front of the gate. (See figure A2.)

Figure A2.

Variation Four

The fourth variation adds the cross-barrier piece to the two U-shaped barrier pieces to form three horizontal barriers.

See drawings: Width-Limiter Gate 27 inches, Width-Limiter Gate 30 inches, and Nonmotorized Trail Barrier Gate.

OBJECT AND BARRIER MARKERS ON OHV ROUTES

By Don Trammell, USDA Forest Service
Trails Unlimited Enterprise Unit

If the route is a National Forest System (NFS) road, refer to EM-7100-15 Sign and Poster Guidelines for the Forest Service, Chapter 3A, Section 3A.8 – Markings. This section provides all necessary information to properly mark gates or other constructed features that are across, in, or adjacent to roads, and should be followed. (See figures B1 and B2.) Similar guidance for marking objects or barricades within or adjacent to motorized trails is contained in Chapter 5, Section 5.2.2 – Warning Signs and Markers. Mark both sides of all constructed features so they are visible to traffic from both directions. The minimum marking is subject to determination by a recreation study or review.

Figure B1. Striping points down toward the center of the road.

Figure B2. Shows striping on the back side of a double gate.

The following are the suggested minimum markings for constructed features or hazards on motorized NFS trails that intrude into the roadway, trailway, or a combination of both. Constructed features include width limiter gates, cattle guards, and gate posts that are within or immediately adjacent to the trail.

Mark objects with retroreflective yellow and black striped Type 3 object markers or with sheeting applied directly to the object or posts. Type 3 object markers and sheeting come in left and right applications. The stripes should slope down toward the side of the obstruction that traffic is to pass. Whenever possible, install markers approximately 4 feet above the ground. However, if the object is lower than 4 feet, priority should be given to marking the edge of the object closest to the center of the trail regardless of height. A retroreflective area approximately 3-inches wide and 18-inches long is the suggested minimum marking. If

the closest portion of the object is too low to be effectively marked, a flexible post with retroreflective markers should be installed in line with the obstacle. (See figure B3.)

Figure B3. Wrap the yellow and black sheeting around the pipe pointing to the center of the trail.

If a trail is restricted by a gate or a closure bar, mark the prominent horizontal barrier closest to 4 feet above the ground with retroreflective red and white striped barricade markers or sheeting. At a minimum, two barricade markers, a left-hand and a right-hand marker, should be used on the restriction device with the stripes pointing toward the center of the barrier. The suggested minimum marking area is approximately 3-inches wide by 3-feet long. Mark the horizontal barricades of an off-highway vehicle barrier in the same manner. (See figures B4 and B5.)

Figure B4. Use rectroreflective red and white sheeting to highlight closure bar across trail.

Figure B5. OHV barricade at equestrian gate. (There is no trail in this area.)

Mark gate posts, culvert ends, cattle guard ends, drop offs, and other objects or obstacles located off the trail to warn users a potential hazard. Use retroreflective yellow Type 2 object markers or sheeting. The suggested minimum marking area is approximately 3-inches wide and 6-inches long. (See figure B6.)

Figure B6. Post marked with 6-inch-long yellow sheeting.

Wherever a restriction device is installed, in addition to the standard barrier and object markings, a sign clarifying the restriction also is recommended. The appropriate access travel management sign should be used. (See EM-7100-15, Chapter 6, Travel Management Signing, at http://fsweb.wo.fs.fed.us/eng/roads_trails/signs_os/index.htm.

Figures B7 through B11 show the process for applying the sheeting to existing steel structures.

Figure B7. Sand the metal surface to remove rust and prepare a clean and smooth surface.

Figure B8. Clean residue off the surface using a quick drying degreaser/cleaner such as brake parts cleaner. Follow manufacturer's directions for use.

Figure B9. Measure and cut sheeting to correct size to assure proper fit.

Figure B10. Note, remove backing slowly while pressing sheeting into place to avoid wrinkles.

Figure B11. Apply sheeting to both sides of the barricade.