A Carbon Inventory for Mexico

L. Wood, Senior Associate and Remote Sensing Specialist, and D. A. Hughell, Associate and GIS Specialist, ARD, Inc., Burlington VT
H. G. Lund, Forest Inventory Specialist, Forest Information Services, Gainesville, VA
V. E. Torres, Remote Sensing Specialist, Prextec, Nicolas San Juan 360, Col. de Valle, México
Mario Pérez-Chavéz, Biologist and President, GEOSFERA, Adolfo Ruiz Cortinez, 209, Aguascalientes, México

Abstract—*Treaties such as the United Nations Framework Convention on Climate Change (UNFCCC) recognize the link between changes in vegetation cover and impacts on the global climate. The UNFCCC specifies guidelines for monitoring land use changes and for including such changes in the "equation" for evaluating a nation's compliance with efforts to reduce carbon dioxide (CO^2) releases into the atmosphere. With an estimated 20 percent of CO^2 emissions coming from land use changes, such monitoring must measure the carbon content of various vegetation types. ARD, Inc. developed such means through a United States Agency for International Development (USAID) project entitled Technical Assistance for Developing a Carbon Index for Mexico. The purpose of the project was to strengthen Mexico's ability to estimate the amount of biomass CO^2 lost or gained over time based on a consistent methodology. The ARD team developed a methodology for deriving national carbon estimates from, and in coordination with, well-established Mexican government programs. The team focused on the following land use change and forestry (LUCF) reporting categories: changes in forest and other woody biomass stocks, forest and grassland conversion, and abandonment of managed lands. For each category, the team developed technical guidelines that use data collection efforts already in existence or that would soon be underway—that is, long-term government programs funded each year that would be relatively consistent over time. The team felt that such commitment was necessary to support change estimates that occur on a time scale of decades. The team field-tested the methodology and had the results peer reviewed. The ARD procedures have application throughout the western hemisphere and indeed the rest of the world.*

Introduction

The United Nations Framework Convention on Climate Change (UNFCCC) requires participating nations to develop and communicate a national inventory of anthropogenic emissions and removals of greenhouse gases (GHGs), including carbon dioxide (CO^2) (Articles 4.1 and 12). The Intergovernmental Panel on Climate Change (IPCC), established in 1988, assesses scientific, technical, and socio-economic information relevant to understanding the scientific basis of risks of human-induced climate change. The IPCC also prepares reports and technical papers that provide independent scientific information and advice in support of the UNFCCC. The IPCC provides:

- Guidelines for assembling, documenting, and transmitting complete and consistent national inventory data, regardless of the methods used to produce the estimates.
- Instructions for calculating emissions of CO^2 and methane (CO^4), as well as other trace gases, from six major emission source categories (or "sectors").
- A compendium of information on methods for estimating emissions for a broader range of GHGs and a complete list of source types for each.

One of the six major emission source sectors is the land use change and forestry (LUCF) sector. LUCF consists of five categories, called "modules." With an estimated 20 percent of CO^2 emissions coming from land use changes (Watson and others 2000), monitoring the national inventory requires a means to measure the carbon content of various vegetation types. The UNFCCC specifies minimum requirements for measuring, monitoring, and reporting CO^2 emissions and removals due to land use

changes, and for evaluating a nation's compliance with international efforts to reduce CO^2 releases into the atmosphere. To date, Mexico has filed two national inventory reports to the UNFCCC (1997 and 2001). A third report is required in 2009.

This paper describes a methodology to strengthen Mexico's ability to estimate the amount of biomass CO^2 lost or gained over time from land use changes that is consistent with IPCC guidelines and uses existing Mexican government data resources. ARD, Inc. carried out the work through a United States Agency for International Development (USAID) project entitled Technical Assistance for Developing a Carbon Index for Mexico (SEMARNAT 2003). At the time of this study, the Revised 1996 IPCC Guidelines for National Greenhouse Gas Inventories (Houghton and others 1997) were still in use.

Mexican Government Data Resources

Two primary sources of data are required for the ARD methodology. The first is the national land use/land cover (LU/LC) maps of the Instituto Nacional de Estadística Geografía e Informática (INEGI, National Institute of Statistics, Geography and Informatics), the agency responsible for integrating Mexico's statistical information systems. These maps show 66 different land use and vegetation types. INEGIs methodology is fully documented, has remained consistent for decades, and includes ground truth. The polygons of the INEGI LU/LC maps can be used to estimate areas associated with all land use and vegetation classes of interest, for the entire country.

The second data source is the tree volume data of the National Forest Inventory. At the time of our study, the Government of Mexico had embarked on a national forest inventory – the Inventario Nacional Forestal (INF). The Ley Forestal (Forest Law) of 1992 and 2003 mandated this inventory and provided guidelines both in the law and in its accompanying rules and regulations. The Instituto Nacional de Investigaciones Forestales (INIFAP) carried out the inventory with oversight by Comisión Nacional Forestal (CONAFOR) with funding from CONAFOR's parent agency, Secretaria de Medio Ambiente y Recursos Naturales (SEMARNAT). CONAFOR provides detailed guidelines for the collection of inventory field data. These field data will provide wood volume estimates, which can be used to "characterize" some of the INEGI LU/LC classes in terms of their carbon content. Since the early 1980s, the INF has been the only government-approved source of wood volume data in Mexico.

Our methodology associates the INF sample points with the "forest" classes mapped by INEGI. Both data sets are essential to estimate the biomass carbon content in the LUCF sector in Mexico. The two data resources are described in more detail below.

INEGI LU/LC Maps

In Mexico, the successive INEGI LU/LC map series can be used to estimate area changes at the national level. As a country ranked among the world's top five in terms of plant species diversity, INEGI's land classification system is necessarily complex. At the scale of 1:250,000, INEGI uses three-tier, hierarchical classification criteria made up of plant community association, presence or absence of species indicating a secondary stage in the plant community, and soil erosion. At the top tier, this classification scheme is easily referenced to both forest classes and IPCC ecosystems. As part of this work, we developed a lookup table to link INEGIs 66 vegetation types to the IPCC's 17 LUCF ecosystems.

At the time of this study, the most recent complete cartographic set of LU/LC maps available for the entire country were the INEGI Series II maps derived from 1993 Landsat satellite image interpretation and supplemented with field data collected over the period 1994 to 1996. INEGI was in the process of producing the Series III maps using 2002 to 2004 satellite and field data, with expected completion of the vegetation and agriculture layers in November 2004. Together, the completed Series II and III maps are designed to measure change. The 1993 INEGI Series II establishes a baseline to estimate LU/LC change, while the ongoing Series III mapping effort defines the period over which changes can be assessed. INEGI had completed about ten digital sheets in draft form for Series III at the time of this study.

INF Forest Inventory

In Mexico, SEMARNAT is responsible for the design and supervision of the national forest inventory. The new INF follows closely the design of the USDA Forest Service and the Canadian Forest Service inventories (Lund 2003). Thus, the new survey will generate data for Mexico that are comparable to the rest of North America. The implementation of the forest inventory survey is underway, with modest progress in the watersheds of the rivers Lerma-Santiago in Central Mexico and Pánuco in the State of Veracruz. Limited progress is also being made in areas of the States of Hidalgo and Jalisco.

By overlaying a sampling grid on the INEGI LU/LC maps, the INF will produce sample wood volume data for all areas mapped as "forest" by INEGIs Map Series

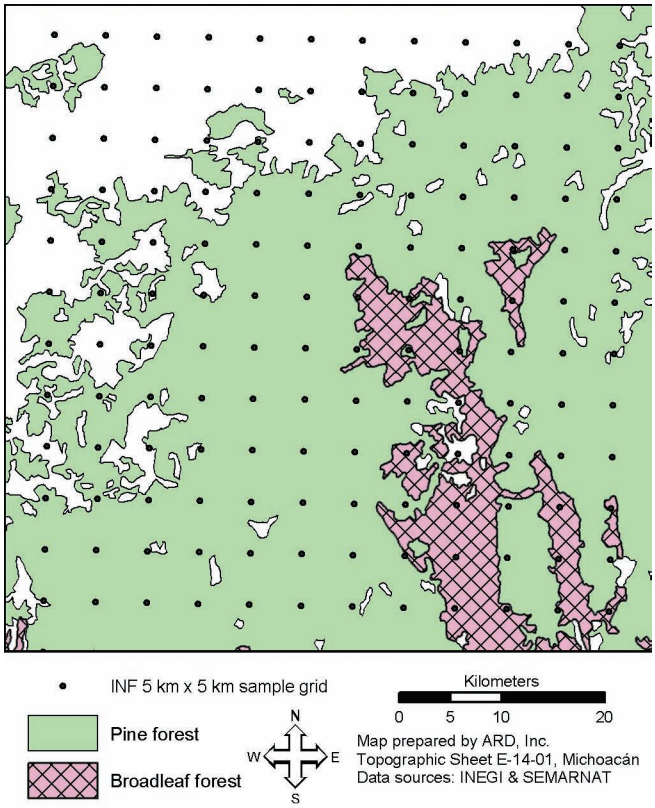

Figure 1. INF Sampling Grid Overlaid on INEGI LU/LC Map.

III. The grid spacing is 5 km x 5 km for tropical and temperate forest (fig. 1), 10 km x 10 km for scrub land, and 20 km x 20 km for arid zones. The INEGI maps restrict to "forest" classes the areas where INF field data are collected. That is, the INF sampling grid "filters" points that fall in "forest" classes, excluding points that fall into other classes such as agriculture, urban areas, and water bodies.

The field data collected for the INF includes tree species, height, diameter, total basal area, and density of herbaceous vegetation. Appropriate "expansion equations" are used to convert timber volume data to estimates of tree biomass. The INF does not currently collect data on litter biomass, but the substantial component of above ground forest biomass in Mexico is usually contained in trunks, branches, and foliage. Thus, a good approximation to the carbon content of the LUCF sector in Mexico can be derived from the samples of the INF.

Although the primary focus of the INF is to estimate the commercial potential of forest lands, the survey also collects data and information on scrub land and arid zone vegetation – categories that fit within the context of the UNFCCC agreement. When the INF is complete, Mexico will have the data necessary to provide good estimates of above-ground carbon for forest lands. The sampling intensity ensures that the inventory will obtain enough samples for each INF class to provide biomass estimates at a pre-specified level of confidence.

Definitions of "Forest"

The Marrakesh Accords (UNFCCC 2001) provide the definitions, modalities, rules and guidelines relating to land use, land use change, and forestry activities under the Kyoto Protocol of the UNFCCC. However, the definition of "forest" and "degraded forest" provided by the Ley Forestal, INEGI, and the Marrakesh Accords differ in significant ways.

The Marrakesh Accords define "forest" as:

> "a minimum area of land of 0.05 to 1.0 hectares with tree crown cover (or equivalent stocking level) of more than 10 to 30 per cent with trees with the potential to reach a minimum height of 2 to 5 meters at maturity in situ. A forest may consist either of closed forest formations, where trees of various stories and undergrowth cover a high proportion of the ground, or open forest. Young natural stands and all plantations which have yet to reach a crown density of 10 to 30 per cent or tree height of 2 to 5 meters are included under forest, as are areas normally forming part of the forest area which are temporarily unstocked as a result of human intervention such as harvesting or natural causes but which are expected to revert to forest" (UNFCCC 2001)."

For national GHG reporting, nations are free to choose any threshold for defining forest land within the ranges given in the Marrakesh Accords.

Based upon the Ley Forestal, the INF defines "forest" as any naturally occurring area covered by trees, scrub, or arid zone vegetation.

INEGI distinguishes between forests and forests with secondary vegetation. INEGI defines "forest" as naturally occurring tree-covered areas larger than 25 hectares with more than 60 percent tree crown cover. Forests with secondary vegetation are defined as those having 10 percent to 60 percent crown cover with the presence of secondary species—specifically, the presence of key indicator species. INEGI does not include forest plantations, orchards, or urban parks in its definition of "forest." Forest plantations and orchards are mapped as perennial crops; urban parks are not separated from the "urban" class. Thus, the INEGI definition may omit a large amount of area that the Marrakesh Accords would consider forested.

What constitutes a "degraded forest" is yet another issue. In Mexico, a forest with secondary vegetation

is often regarded as degraded forest. Such areas might remain as forests or be converted to different land use types. IPCC defines degradation of forest as "a direct human-induced long-term loss (persisting for X years or more) of at least Y percent of forest carbon stocks [and forest values] since time T and not qualifying as deforestation or an elected activity under Article 3.4 of the Kyoto Protocol. (Penman 2003a). It remains to specify an area threshold if desired, as well as time and carbon loss thresholds in order to "operationalize" such a definition.

The IPCC focuses on human-induced causes and, in this case, on degradation of the structure and function of the forest. The time scale for "degradation" is long term—to distinguish it from "carbon stock reductions" which are short-term changes (for example, timber harvesting as part of sustainable forest management). The term is intended to capture overuse or poor management of forests leading to long-term reduction in carbon stocks (in other words, biomass density). A forest with secondary vegetation may or may not result in a long-term reduction in carbon stocks or in reduced capacity of the forest to produce goods and services, so the Mexican definition encompasses a much broader set of parameters than the "degraded" forest defined by the IPCC. However, these lands certainly represent areas of active change in biomass.

In addition to forest lands, there are other categories of lands designated by the UNFCCC on which countries are to monitor and report. These include croplands, grasslands, wetlands, and settlements. Scrub and arid zone vegetation would be reported as "grasslands" according to IPCC Good Practice Guidance for Land Use, Land-Use Change and Forestry (Penman 2003b). These areas, however, are classified as forest according to the Ley Forestal (and therefore the INF).

Methodology

When its third report to the UNFCCC is due in 2009, and before the INF is completed, the Government of Mexico will require information for estimating net emissions and removals of CO^2 in the LUCF sector. Our methodology is designed to accommodate the incomplete INF forest inventory data. Our methodology collects field data on a subset of INF samples large enough to provide carbon estimates to a pre-determined level of confidence or sampling error (Lund, Thomas 1989). This approach does not deviate from the systematic INF sampling grid, but rather selects points from the grid to satisfy the immediate needs for carbon reporting in lieu of a completed, nationwide INF.

We stratify INEGIs LU/LC cartographic series according to vegetation types, then use the INF sampling grid to determine areas where data can be collected to estimate carbon stocks. Such a subset must include stable areas as well as those undergoing change in each of the IPCCs LUCF reporting categories. For this subset, data collection should follow the INF standard procedures, but need not include the full set of parameters. Only data for those parameters essential for estimating biomass carbon need be collected.

Since there are no carbon measurements from the reference date, the Government of Mexico will need to assume that the carbon content of a given LU/LC class measured in 2002/2004 can be applied to the same class defined in 1993. The extrapolation of 2002/2004 carbon measurements to an earlier date must be substantiated by the calculated variance of the carbon content in the samples collected within the classes of interest. For example, if the carbon content of mature pine forest turns out to be relatively homogeneous in the INF survey of 2003 (in other words, the computed variance is small), one could extrapolate these measurements back to 1993 with greater confidence. On the other hand, if the coefficient of variance (the ratio of the sample standard deviation and sample mean) of the carbon content of a given forest type is as much as 40 percent, then this procedure may not generate reliable estimates. Thus, an analysis of within-stratum variance must be carried out before undertaking the collection of a sub sample of INF data.

The INEGI LU/LC maps do not contain enough information on biomass variance to be useful for allocating sample size. In our study, we found that for some INEGI categories (such as forest with secondary vegetation) carbon stock estimates may vary as much as an order of magnitude. Such a wide range of carbon values, coupled with the extent of forest with secondary vegetation in the country, could represent one of the greatest uncertainties for estimating carbon stock and carbon stock changes from the LUCF sector in Mexico. Thus, the INF sample collection must begin with a survey designed to yield the variance information required to define the number of samples necessary to provide estimates at a given confidence level. Once the parameters of the LU/LC classes are determined, the value and variance of the IPCC categories that are aggregates of those classes can then be established.

The following steps outline our procedure for establishing a forest biomass baseline ("phase 1"), estimating changes in forest biomass using INEGI maps and INF plots ("phase 2"), and computing the change ("phase 3").

Phase I. Estimating Current Biomass (Baseline)

1. Establish inventory unit boundaries.

2. Overlay INF grid.
3. Establish INF plots.
4. Record field-observed INEGI class and IPCC category (needed to estimate area sampling errors).
5. Measure trees (needed for volumes).
6. Superimpose latest INEGI maps.
7. Record latest INEGI map class for each plot.
8. Stratify plots according to INEGI map classification.
9. Compute average volume of wood per hectare by stratum.
10. Estimate volume of wood per hectare, variance, and so forth using tree data.
11. Estimate the area of each stratum. (There is a choice of using the plot expansion factor or the sum of the INEGI strata by class in the inventory unit. While the former may be "proper," the latter may be more useful when mapping change.).
12. Estimate total volume per stratum by multiplying area by average volume per hectare.
13. Expand to inventory unit by summing strata totals.
14. Estimate and report sampling errors.

Phase II. Estimating Past Biomass

15. Estimate INEGI forest type areas from old maps within same inventory unit.
16. Superimpose old INEGI maps over new; note areas of change.
17. Subtract or add areas of change to information derived from phase II, step 15.
18. Use strata average volume/hectare derived from phase I, step 9 and multiply by old INEGI stratum area to get volume per strata for the time the old maps were made.
19. Sum strata totals to get old inventory unit volumes.
20. Compare results from Phase II and I.

Phase III. Computing Change

21. Stratify according to the IPCC change category and insert data into appropriate IPCC category as to whether change was:
    - (Forest > degraded) = Closed forest to forest with secondary vegetation = Degradation or disturbance. (IPCC "Changes in Forest and Other Woody Biomass")
    - (Forest > non-forest) = Land conversion (IPCC "Forest and Grassland Conversion")
    - (Non-forest > forest) = Land conversion (IPCC "Abandonment of Managed Lands")
    - (Forest > improved forest) = Open forest to closed forest = Forest improvement ("Changes in Forest and Other Woody Biomass")
22. Estimate and report sampling errors for each IPCC category

Application of Methodology to the IPCCs LUCF Categories

Although establishing a "carbon baseline" is desirable, the essential information required for reporting to the UNFCCC are the net changes ("emissions by sources and removals by sinks") of CO^2 due to human-induced ("anthropogenic") causes. Specifically, for the LUCF sector, the reporting categories are (a) changes in forest and other woody biomass stocks; (b) forest and grassland conversion; (c) abandonment of managed lands; (d) CO^2 emissions and removals from soil; and (e) other. The first step, then, is to identify changes in areas relevant to the IPCC. Our methodology addresses categories (a) through (c) and, incidentally, (e), but not (d).

Changes in Forest and Other Woody Biomass

The IPCC category "changes in forest and other woody biomass" accounts for "the emissions or removals of carbon (and CO^2) due to changes in forest and other woody biomass stocks affected by human activity" (Houghton and others 1997). Specifically, "emissions" encompass commercial harvest, fuel wood consumption, and "other" wood removed. These are partially offset by "removals" calculated as the product of the area of forest biomass stock and annual growth rate. The computations required for estimating the CO^2 emissions and removals for this category are shown graphically in figure 2.

Changes in woody biomass can occur in areas that do not necessarily undergo a change in land use but which do change in their above-ground forest biomass density. (Hence, these areas remain in the same class assignment and are still classified as "forest"). This gradual process often begins with an undisturbed mature forest and in some cases ends with a change of land use (deforestation), commonly cropland, or pasture. In this case, the change would be accounted for under IPCC guidelines as a "conversion." Alternatively, if it can be demonstrated that these areas are undergoing a long-term reduction in their capacity to produce goods and services, they would be reported under "Other."

INEGI classifies forest with secondary vegetation by the presence of secondary species with a concurrent reduction of crown cover. Mexico has large areas of forest with secondary vegetation, especially in temperate forests. If changes in woody biomass do not translate into changes in crown cover or result in the introduction of indicator species, a comparison of INEGI map series will not detect the changes. (For example, a forest with 100 percent crown cover and 350 tC/ha of biomass in t0 could

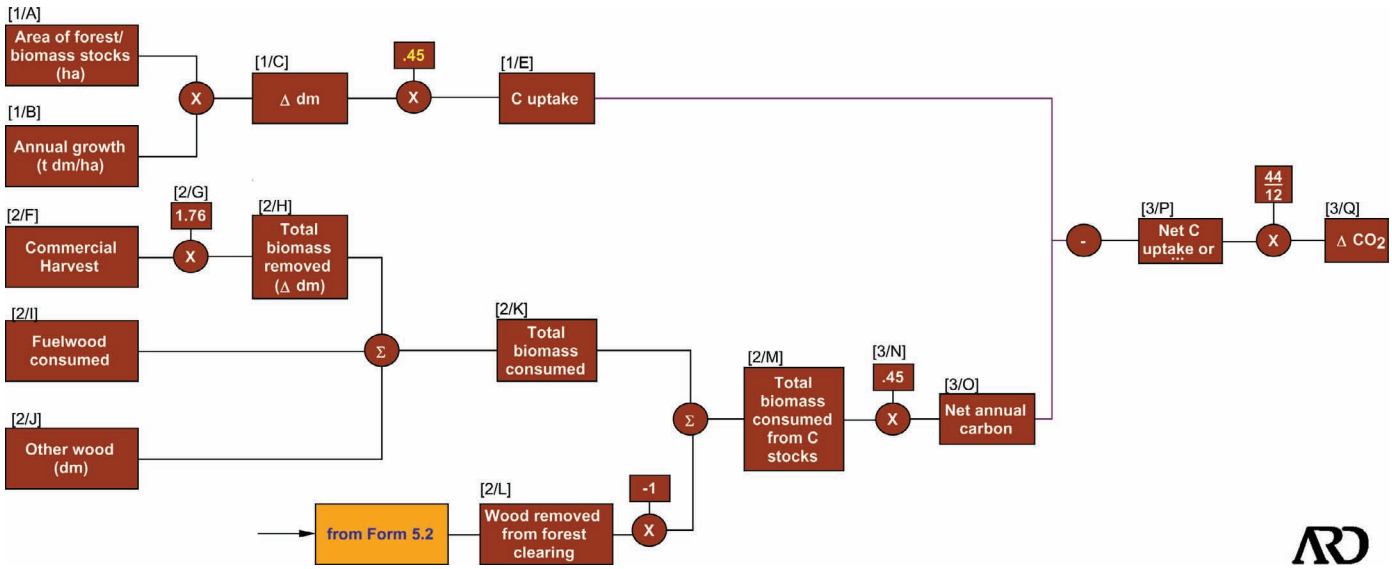

Figure 2. Changes in Forest and Other Woody Biomass.

be degraded to a 60 percent crown cover and 280 tC/ha in ti and still retain the same INEGI LU/LC type.)

Forest and Grassland Conversion

The IPCC category "forest and grassland conversion" is primarily intended to account for the effects of slash and burn agriculture. Procedures for computing the net CO^2 emissions and removals from this category (fig. 3) account for the activities of cutting undergrowth and felling trees, followed by burning the biomass on site or as fuelwood (off site), with some of the biomass remaining behind to decay slowly.

In Mexico, land conversion is recorded as "deforestation" when it takes place in temperate or tropical forests and "clearing" when it takes place in scrubland. Clear cutting is common in tropical forests in southern Mexico, where forest is replaced by rangeland. Elsewhere, changes are more gradual. Progressive fragmentation of temperate forest (Herrera 2004) nevertheless eventually leads to establishment of agricultural lands.

The INEGI maps are particularly relevant for establishing where forest and grassland conversion has taken place, since other national mapping programs have not used consistent classification schemes or incorporated ground truth, without which measuring change is difficult if not impossible. Additional detail is also provided which is useful for understanding the causes of the changes. For areas identified with secondary vegetation, INEGI

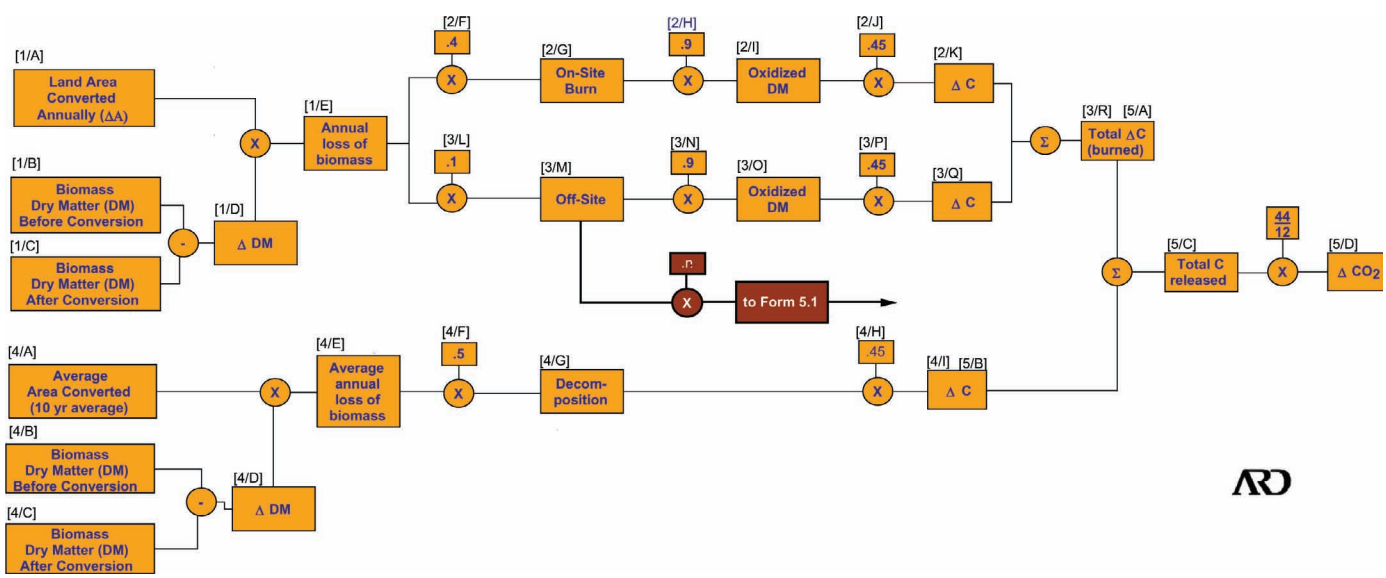

Figure 3. Forest and Grassland Conversion.

includes field verification of dominant species, while areas of mixed vegetation with shifting agriculture are shown by a specific hatching pattern. The major drawback of the INEGI map series is that they are only generated every 10 years.

Abandonment of Managed Lands

The IPCC category "abandonment of managed lands" deals with "net CO^2 removals in biomass accumulation resulting from the abandonment of managed lands," where "managed lands" include cultivated lands and pasture (Houghton and others 1997). Because carbon accumulation on abandoned lands is sensitive to ecosystem type, re-growth rates are further subdivided into land abandoned during the 20 years prior to the inventory, and land abandoned between 20 and 100 years ago. The computations required for estimating the CO^2 emissions and removals for this category are indicated graphically in figure 4.

The largest areas in Mexico of formerly managed, now abandoned lands are in Central Mexico (Herrera 2004). These areas were mostly marginal agricultural lands that had been abandoned due to unfavorable market conditions. They include many areas formerly registered in the Ministry of Agriculture's farm subsidy program Apoyos y Servicos a la Comercialización Agropecuaria (ASERCA).

Testing and Peer Review

Throughout the study we conducted a multiple-stage peer review, both technical and operational, of the evolving methodology. Peer reviewers included nationally and internationally recognized experts in the fields of forest inventory, mapping, and remote sensing, as well as a representative from the IPCC Task Force on National Greenhouse Gas Inventories. This peer review provided valuable guidance for directing our effort, and ensured compatibility not only with the IPCC but also with the North American Forestry Commission.

We tested the methodology in the Mexican state of Michoacán using Series II and III map sheets made available to us by INEGI. We engaged the services of a private contractor familiar with the INF procedures to collect data on a sample of INF points within INEGI quadrangle E-14-01. Of the 92 INF grid points that fall within this quadrangle, 64 are located in temperate forests, nine in tropical forests, and 19 in non-forested areas. We randomly selected 21 points from the INF grid which were classified as temperate forest in the INEGI Series II map. (We did not include tropical forests or other land cover types since the number of grid points in both cases would have been too small to be useful.) Procedures employed for collecting data from sample plots were nearly identical to the INF procedures, with the exception that data were not collected on species diversity, tree growth rings, minor vegetation, and soil organic matter. These data are not considered necessary for estimating above-ground biomass to the accuracy necessary for national carbon reporting.

During July 2003, the contractor collected field data on 19 of the 21 plots. (Land owners denied access to two plots.) We processed these data to calculate the volume of the stems and limbs for each plot (table 1). The results indicate rather high standard deviations, indicating a high "within stratum" variability.

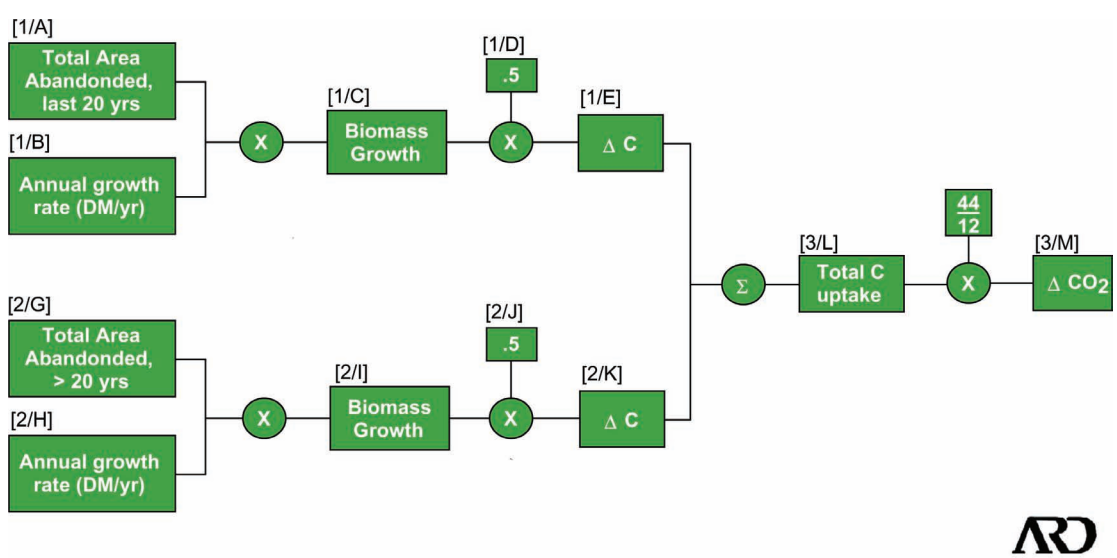

Figure 4. Abandonment of Managed Lands.

Table 1. Data from the 19 INF data points summarized by INEGI forest type.

			Volume (m^3/ha)	
INEGI Vegetation Type	**IPCC Category**	**Count**	**Mean**	**Std.dev.**
Pine-oak forest	Coniferous forest	6	120.4	83.7
Pine-oak forest/VSa	Coniferous forest	8	135.1	128.8
Oak forest/Vsa	Broadleaf forest	3	83.9	74.0
Oak-pine forest/VSa	Broadleaf forest	2	46.3	71.1
All vegetation types		19	127.6	100.0

It is useful to estimate the optimal sample size required to ensure a sample large enough to obtain the desired precision, while not sampling more points than needed. Using a "t" value of 1.96 and the average standard deviation from the data collected (100.0 m3/ha), the sample sizes corresponding to errors of 10, 20, and 30 m3/ha are 305, 76, and 34, respectively.

The preliminary results of our field test suggest that the methodology outlined in this paper would provide a mechanism for Mexico to make use of the INEGI LU/LC map series and INF for the purposes of national GHG inventory reporting to the UNFCCC in the LUCF sector.

Conclusions

The Government of Mexico should consider our methodology as a mechanism to improve its estimates of emissions and removals of GHGs, especially CO^2, from the LUCF sector in Mexico. Because the data upon which the methodology depends is the product of long-term, mandated government programs, it should yield consistent, reliable results now and in the future.

The specific Government programs that would allow the estimate of CO^2 are the 1:250,000 scale LU/LC map series of the Instituto Nacional de Estadística Geografía e Informática (INEGI) and the Inventario Nacional Forestal (INF, National Forest Inventory). The INEGI maps provide vegetation base maps (Victoria 2004), while the INF data provide information needed to characterize the mapped vegetation in terms of carbon content. However, unlike the well-established INEGI LU/LC map series, the INF program is advancing piece-meal, though there is a general strategy and plan of action to survey the entire country (Sandoval 2004).

Until the INF is complete, the sampling frame procedures used are fully defined and can be used immediately to gather data specifically for the purpose fulfilling Mexico's international reporting commitments to the UNFCCC.

Acknowledgments

The ARD team acknowledges the support and contributions of Ms. Heather Huppe and Mr. David Antonioli, USAID/Mexico; Dr. Julia Martínez, Instituto Nacional de Ecologia (INE) and her staff; Dr. Omar Masera, Instituto de Ecologia, Universidad Nacional Autonoma de México and his staff; Dr. Franscisco Takaki Takaki, Biol. Arturo Victoria Hernandéz, Ing. Alfonso Zarco Muñoz, and numerous other helpful staff of INEGI; and Bernard Herrera Herrera, Universidad Autónoma Chapingo.

References

Herrera Herrera, Bernard. 2004. Deforestación y Dinámica Territorial, Pariodo 1980 – 2000; Univ. Aut. Chapingo; Chapingo, México.

Houghton J.T., Meira Filho L.G., Lim B., Treanton K., Mamaty I., Bonduki, Y., Griggs D.J. and Callander B.A. (Eds). 1997. Revised 1996 IPCC Guidelines for National Greenhouse Inventories. IPCC/OECD/IEA, Paris, France. www.ipcc-nggip.iges.or.jp/public/gl/invs1.htm.

Watson, Robert T. and others. eds. 2000. Land Use, Land Use Change, and Forestry - A Special Report for the IPCC; Cambridge Press; 375 p.

Lund, H. G. 2003. North American Ecoregion Database Project. Management and Engineering Technologies International, Inc. (METI) Contract Number: 45318720535; Order Number: 43-3187-3-0620 Washington, DC: U.S. Department of Agriculture: Forest Service. Miscellaneous pagination.

Lund, H. Gyde; Thomas, Charles E. 1989. A primer on stand and forest inventory designs. Gen. Tech. Rep. WO-54. Washington, DC: U.S. Department of Agriculture; Forest Service. 96 p. (PDF: 4.1 MB) http://www.fs.fed.us/rm/ft-col/publications/outofprint/wo_54.pdf.

Penman, Jim and others (eds.). 2003a. Definitions and methodological options to inventory emissions from direct human-induced degradation of forests and devegetation of other vegetation types; Intergovernmental Panel on Climate Change. IPCC-XXI/Doc. 8. Kanagawa, Japan: IPCC Secretariat; 32 p.

Penman, Jim and others (eds.) 2003b. Good Practice Guidance for Land Use, Land-Use Change and Forestry; Intergovernmental Panel on Climate Change; IPCC National

Greenhouse Gas Inventories Programme; Kanagawa, Japan: Institute for Global Environmental Strategies (IGES).

Sandoval, Alberto. 2004. Inventario Nacional Forestal y de Suelos, Presentación Ejecutiva, Comisión Nacional Forestal, Panel de Conferencias Sobre el Inventario Forestal y de Suelos, Reunión Anual de Geografía; July 2, 2004; Guadalajara , Jalisco, Mexico.

SEMARNAT, 2003. Taller sobre mejoras a los estimados de emisiones de gases de efecto invernadero, para el sector uso de suelo, cambio de uso de suelo y silvicultura. Febrero 26, 2003. Mexico City: Instituto Nacional de Ecologia.; www.ine.gob.mx/dgicurg/cclimatico/taller_darum.html.

UNFCCC. 2001. Report Of The Conference Of The Parties On Its Seventh Session, Held At Marrakesh From 29 October To 10 November 2001, Addendum Part Two: Action Taken By The Conference Of The Parties, Volume I; FCCC/CP/2001/13/Add.1.

Victoria, Arturo. 2004. Información de Uso del Suelo y Vegetación, Series III, Instituto Nacional de Estadística Geografía e Informática, Panel de Conferencias Sobre el Inventario Forestal y de Suelos, Reunión Anual de Geografía, July 2, 2004, Guadalajara , Jalisco, Mexico.