Assessing Mitigation of Wildfire Severity by Fuel Treatments — An Example From the Coastal Plain of Mississippi

Erik J. Martinson[1] and Philip N. Omi[2]

Abstract—*Fuel treatments such as prescribed fire are a controversial tenet of wildfire management. Despite a well-established theoretical basis for their use, scant empirical evidence currently exists on fuel treatment effectiveness for mitigating the behavior and effects of extreme wildfire events. We report the results of a fire severity evaluation of an escaped prescribed fire that burned into an area previously treated with repeated prescribed fires. We observed significantly lower scorch heights, crown damage, and ground char in the treated area. We attribute the moderated fire severity in the treated area to a significantly altered fuel profile created by the repeated prescribed fires. Though our results represent just one treatment area in a single wildfire, they add to a depauperate database and bring us a step closer to defining the conditions under which fuel treatments are an effective pre-suppression strategy.*

Introduction

Fuel treatment effectiveness as a pre-suppression strategy is a controversial tenet of wildfire management with a strong theoretical foundation, but scant empirical evaluation. Several recent reviews provide a survey of the extant literature on the scientific justification for fuel treatment programs (Graham and others 2004; Carey and Schumann 2003; Fernandes and Botelho 2003). A perusal of the publications cited in these reviews and those published subsequently (prior to March 2006) reveals that much of the evidence of fuel treatment effectiveness comes from the results of simulations based on models of fire spread (Rothermel 1972) and crown fire potential (Rothermel, 1991). More than half (26 of 49) of the analytical studies conducted in North America rely on simulations and, of these, half (13) employ hypothetical treatments as well as hypothetical wildfires. Many questions related to fuel treatments can only be addressed in a modeling environment, such as optimal landscape placement (Finney 2001) or potential effectiveness under varying climate regimes. However, the ability of current fire behavior models to reflect reality has received little validation, particularly under the extreme conditions that produce large wildfire events (Cruz and others 2005). Thus, the results of modeling experiments are best viewed as hypotheses awaiting an empirical test.

Nonetheless, simulation experiments have been necessary to establish a scientific basis for the effectiveness of fuel treatments, given the obvious limitations on experimentation with actual wildfires. Just one study exists that tested the effectiveness of a fuel treatment under experimental conditions extreme enough to produce crown fire activity (Alexander and Lanoville 2004). This study was conducted in the boreal forest of the Canadian Northwest Territories and the authors conclude that thinning without treatment

In: Andrews, Patricia L.; Butler, Bret W., comps. 2006. Fuels Management—How to Measure Success: Conference Proceedings. 28-30 March 2006; Portland, OR. Proceedings RMRS-P-41. Fort Collins, CO: U.S. Department of Agriculture, Forest Service, Rocky Mountain Research Station.

[1] Research Associate, Department of Forest Rangeland and Watershed Stewardship, Colorado State University, Fort Collins, CO. erikm@warnercnr.colostate.edu

[2] Professor Emeritus, Department of Forest Rangeland and Watershed Stewardship, Colorado State University, Fort Collins, CO.

of surface fuels is largely ineffective, though the sample size was very limited and no statistical analysis has been reported.

The remainder of the evidence of fuel treatment effectiveness in North American ecosystems relies on natural experiments in which an actual wildfire serendipitously encountered one or more fuel treatment areas. Though there have been recent efforts to collect fire behavior data *in situ* as wildfires encounter fuel treatments (Fites-Kauffman 2001), all 22 of the natural experiments published to date have relied on *post facto* analysis. However, just 11 of these studies included a statistical analysis of the treatment effect and only seven attempted to control for the influences of topography and weather, which along with fuels are the determinants of fire behavior. Rather incredibly, only four studies have been published that included both a statistical test and adequate control to discern a fuel treatment effect in an actual wildfire.

Pollet and Omi (2002) evaluated the severity of four wildfires that burned over treated areas in ponderosa pine forests in Oregon, Washington, California, and Arizona. One of the fires encountered a prescribed burn, while the other three encountered thinning treatments where the activity fuels were effectively removed, either by burning or whole-tree removal. The treatments were completed 1 to 11 years prior to wildfire and in all cases fire severity was found to be significantly lower in treated stands.

Raymond and Peterson (2005) evaluated the severity of a wildfire in mixed conifer forest of coastal Oregon that burned over four thinning treatments, one of which included subsequent underburning. All thinning was completed 6 years prior to the wildfire and the underburn was done 5 years later. Fire severity was found to be significantly greater in two of the three thinned areas that were not underburned, while the third showed no effect. However, the wildfire burned around the underburned treatment without entering.

Cram and others (2006) evaluated the severity of three wildfires that burned over treatments in ponderosa pine forests in Arizona and New Mexico. All of the wildfires included areas that were thinned followed by prescribed burns and one of them also included areas where the slash was scattered but left on-site. All treatments reduced wildfire severity, but the treatments that were not prescribe-burned were less effective.

Skinner and others (*in press*) evaluated the severity of a wildfire in ponderosa pine dominated forest in northern California that burned over five thinning treatments, all but one of which were subsequently treated with prescribed fire. Fire severity was found to be significantly lower in the thinned units where the slash was treated, but no effect was observed in the thin-only treatment.

This paper describes how the fuel treatment assessment methods followed by Pollet and Omi (2002) were applied again to provide much needed additional empirical information from a wildfire that burned into an area that had been previously treated with repeated prescribed burns in coastal Mississippi. We follow with a discussion of how our methods have since evolved to overcome certain limitations presented by this site.

Methods

Study Area

The study site is located on and adjacent to the Fontainebleau Unit of the Mississippi Sandhill Crane National Wildlife Refuge. The Refuge is approximately 8 km east of Ocean Springs in Jackson County, Mississippi in

the Gulf Coastal Plain physiographic province. Topography is flat throughout at an elevation of 6m. Slash pine (*Pinus elliottii* Englem.) is dominant in the forest canopy with longleaf pine (*Pinus palustris* Mill.) also present. Sub-canopy species include persimmon (*Diospyros virginiana* L.) and black gum (*Nyssa sylvatica* Marsh). Vines (e.g., *Vitis* spp. and *Smilax* spp.), bays (*Persea* spp.), and gallberry (*Ilex coriacea* (Pursh) Chapm.) are abundant in the understory.

The US Fish and Wildlife Service established the Refuge in 1975 to protect the endangered Mississippi Sandhill Crane (*Grus canadensis pulla* Aldrich) and its wet pine savannah habitat. Management of the Refuge includes extensive use of prescribed fire to reduce hazardous fuels and restore the open structure of longleaf pine savannahs (Platt and others 1988). One such prescribed fire became the Fontainebleau wildfire at 1430 hours on April 18, 1999 when it spotted across a railroad and onto private property containing untreated fuels best characterized by Fuel Model 7 (Anderson 1982). The wildfire exhibited extreme behavior and at 1600 hours spotted back across the railroad and into a stand that Refuge managers had burned in 1988, 1992, and 1998 with the objective of converting fuels to approximate Model 2 conditions. The Fontainebleau fire grew to a final size of 142 ha including 36.5 ha on Refuge lands last treated in 1998. Hourly weather conditions from an on-site Remote Automated Weather Station are provided in Table 1.

Data Collection

We collected data in September 1999 to quantify fuels and fire severity differences between treated and untreated stands affected by the Fontainebleau Fire. Data were collected in nine variable radius plots in each of the two stand types (treated and untreated). Plot areas were defined with a Cruiser's Crutch with a metric basal area factor of 2 (Avery and Burkhart 1994). We employed a systematic sampling design in which plot centers were separated by 60 m along three transects also separated by 60 m. A 60 m buffer on either side of the railroad that separates the treated and untreated areas minimized edge effects. Figure 1 depicts a map of the fire perimeter, treatment area, and plot locations.

The trees sampled at each plot were distinguished by species and crown position and measured for the following aerial fuel descriptors: stand density, tree size and height, and height to the base of the pre-fire live crown. The

Table 1—Weather conditions during the Fontainebleau Fire on April 18, 1999 (weather data from an onsite Remote Automated Weather Station).

Time	Wind speed	Wind Direction	Temperature	Relative Humidity	Dead Fuel Moisture Content 1hr [a]	10hr [b]	100hr [c]
hr	*km per hr*	*Azimuth*	*°C*	*percent*			
1400	10.9	315	21.0	27	5.5	6.7	15
1500	9.0	270	22.3	28	5.5	6.7	15
1600	12.1	315	21.3	28	5.6	6.6	15
1700	9.7	315	21.3	29	5.9	5.8	15

[a] Dead fuel moisture content is expressed by standard equilibrium time lag classes: 1hr refers to fuels less than 0.25 inch diameter
[b] 10hr fuels are less than 1 inch in diameter
[c] 100hr fuels are less than 3 inches in diameter

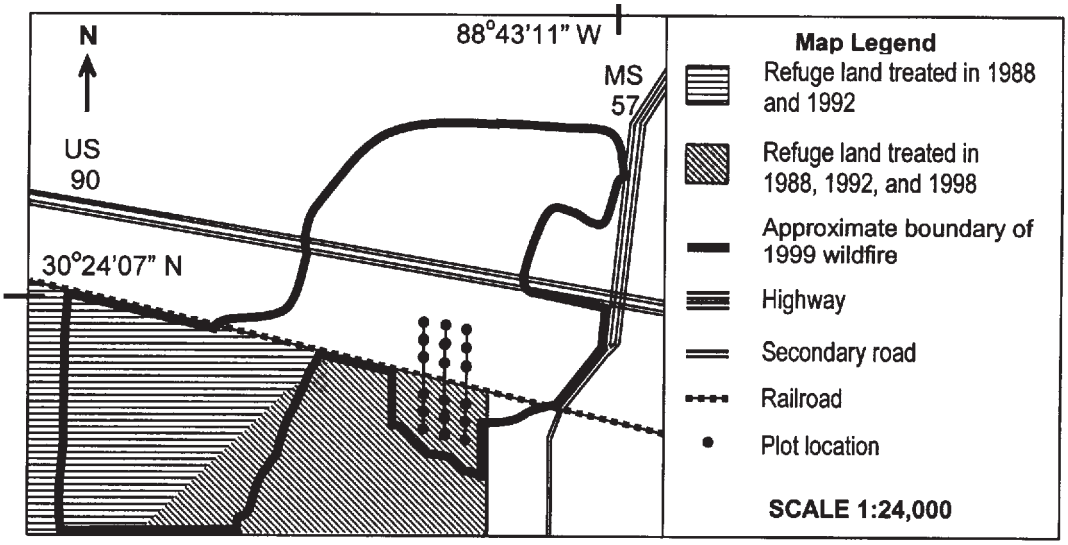

Figure 1—Plot locations in relation to fuel treatments involved in the 1999 Fontainebleau wildfire on and adjacent to the Mississippi Sandhill Crane National Wildlife Refuge. The fire started as a prescribed burn on the Refuge (in the area shaded with horizontal lines), but was declared a wildfire when it spotted across the railroad and onto private property. The wildfire later spotted back across the railroad and into an area the Refuge had previously treated.

base of the pre-fire live crown was judged to be the lowest branch with twigs, though this may have been an overestimate in severely burned plots if lower live branches or twigs were completely consumed; or an underestimate if lower branches with twigs were needleless prior to the fire. We also attempted to quantify the pre-fire density and height of shrub fuels (an important component of Fuel Model 7) by sampling four 1 m^2 circular plots located at 90 degree angles and 17.85 m from each plot center. No attempt was made to quantify pre-fire conditions of other surface fuel components post hoc, since the fine fuels that contribute most to surface fire spread are consumed in most fires (Ottmar and others 1993).

Following the methods used by Pollet and Omi (2002), we evaluated wildfire severity at each plot in terms of stand damage, as well as upward and downward heat pulse components. Stand damage ratings were adapted from Omi and Kalabokidis (1991) while the downward heat pulse was estimated with ground char ratings adapted from Ryan and Noste (1985). Rating criteria are provided in table 2. Stand damage was evaluated for the plot as a whole, while the downward heat pulse was estimated with ground char ratings in four 30 m x 60 m subplots at the same locations as the shrub subplots described above.

Table 2—Criteria used to evaluate fire severity in sampled stands.

Rating	Stand Damage Criteria	Ground Char Criteria
0	All tree crowns unscorched.	No evidence of surface fire.
1	Partial scorch on at least 1 tree, but some trees unscorched.	Litter and twigs charred.
2	Partial scorch on all tree crowns, but few trees completely scorched.	All twigs, leaves, and standing grasses consumed, branches and logs charred.
3	Nearly all tree crowns completely scorched, but few crowns consumed.	Branches and logs mostly consumed.
4	Nearly all tree crowns consumed.	

The height of needle scorch on the coniferous trees sampled at each plot was measured as an indicator of fireline intensity (Van Wagner 1973). Percent canopy scorch was ocularly estimated on all trees, as well. Since height of needle scorch underestimates fireline intensity on trees that are either unscorched or completely scorched (the upper bound of scorch height is limited by tree height, while the lower bound is limited by crown base height), we modified calculations for average scorch height at each plot by excluding measurements from trees that were uninformative or misleading. Specifically, only the following measurements contributed to plot averages for scorch height:

1) Scorch heights of all partially scorched trees.
2) Tree heights of completely scorched trees added sequentially by decreasing height until average scorch height was maximized.
3) Bole char heights of unscorched trees added sequentially by decreasing height until average scorch height was maximized.
4) Crown base heights of unscorched trees added sequentially by increasing height until average scorch height was minimized.

Data Analysis

Standard statistical software (SAS Institute 2001) was used to conduct two-sample one-tail parametric tests for comparisons of continuous variables between treated (n = 9) and untreated (n = 9) sample plots. Specifically, we tested the following null hypotheses:

H_{o1}: Vertical and horizontal fuel profiles do not differ between the area treated with prescribed fires and the untreated area.
- H_{o1a}: Trees are not larger (in diameter and height) in the treated area.
- H_{o1a}: Crown bases are not higher in the treated area.
- H_{o1a}: Shrubs are not shorter in the treated area.
- H_{o1b}: Densities of trees and shrubs are not greater in the untreated area.

H_{o2}: Wildfire severity does not differ between the area treated with prescribed fires and the untreated area.
- H_{o2a}: Scorch height is not greater in the untreated area.
- H_{o2b}: Crown volume scorch on overstory trees is not greater in the untreated area.
- H_{o2c}: Stand damage is not greater in the untreated area.
- H_{o2c}: Ground char depth is not greater in the untreated area.

Non-parametric Wilcoxon tests were used for ordinal categorical data (that is the fire severity ratings). Significance levels for all tests were adjusted by partial Bonferonni correction to account for multiple comparisons (the Bonferonni adjustment was increasingly liberalized as the correlations among the set of compared variables increased (see *ad hoc* adjustments to the Bonferonni procedure in Sankoh and others (1997) or Uitenbroek (2001)).

Results

The forest treated with repeated prescribed fires on the Mississippi Sandhill Crane National Wildlife Refuge was found to have significantly different fuel profiles than the adjacent unmanaged private forest (table 3). The untreated plots had nearly seven times as many trees as the treated plots and these

Table 3—Comparison of stand conditions and fire severity indicators between treated and untreated stands within the Fountainebleau fire (means with standard deviations in parentheses).

Variable	Treated (n = 9)	Untreated (n = 9)
Tree diameter (cm)	20.9[e] (3.4)	10.7 (4.7)
Tree height (m)	16.5[c] (2.5)	10.6 (4.2)
Height to crown (m)	11.1[c] (2.2)	7.3 (2.7)
Tree density (# per ha)	373[b] (224)	2,496 (2,092)
Tree basal area (m^2 per ha)	14.2 (7.8)	19.1 (10.8)
Shrub height (cm)	61.2[c] 17.2	164.3 (77.9)
Shrub density (# per m^2)	15.9 (5.8)	13.7 (3.7)
Scorch height (m)	10.0[b] (2.9)	15.4 (5.0)
Crown volume scorch (percent)	14[e] (22)	99 (1)
Stand damage rating	0.8[e] (0.7)	3.1 (0.8)
Ground char rating	1.0[b] (0.0)	1.2 (0.2)

Treatment means followed by a superscript indicate a significant difference from the untreated mean in the hypothesized direction as follows:
[a] $p<0.1$.
[b] $p<0.05$.
[c] $p<0.01$.
[d] $p<0.001$.
[e] $p<0.0001$.

were substantially smaller in diameter and height. Trees in the treated plots had twice the girth and were 50 percent taller than those in the untreated plots. Live crown bases were nearly twice as high off the ground in treated plots compared to untreated plots where shrubs were more than twice as tall. However, no significant difference was found in shrub density between the two sampled areas.

The two areas with distinctly different fuel profiles were observed to have experienced distinctly different wildfire severity (fig. 2, table 3). Average height of needle scorch was nearly twice as high in the untreated plots. With very few exceptions crown volume scorch in the untreated plots was 100 percent and significantly greater than in the treated plots. Ground char was light in all the treated plots, but somewhat deeper in the untreated plots.

(a)

(b)

Figure 2—Adjacent treated (a) and untreated (b) stands burned by the Fontainebleau fire.

Discussion

The differences we observed between the treated and untreated areas burned over by the Fontainebleau fire were dramatic. Still, our highly significant results may be conservative, since the 1998 prescribed fire that served as our treatment was reportedly more intense than the subsequent wildfire when it burned in the treatment area. Thus, the scorch heights and crown damage that we observed in the treated area probably resulted from the treatment itself, masking the less severe effects that resulted from the wildfire.

Vertical and horizontal fuel continuity was clearly greater in the private unmanaged forest, as evidenced by taller shrubs, lower tree crowns, and higher tree density. We attribute the lower severity observed on the Refuge primarily to a less hazardous fuel profile that resulted from distinct land management practices, most notably the repeated application of prescribed fire.

However, several caveats associated with this study bear mention. Unlike completely randomized pre-planned experiments, retrospective studies such as this one are inherently prone to selection bias both in the choice of study sites and the location of sample plots. Further, the availability of treatment replicates that might be considered independent samples is beyond the control of the investigators.

When the Fontainebleau fire was selected for investigation, our approach to identifying potential study sites relied on advertising our interest and criteria on relevant electronic list serves and at professional meetings attended by land managers. It soon occurred to us, however, that we might only be contacted in the case of an obviously effective treatment. We have since taken a more rigorous approach to defining the universe of possible study sites in any given year and now contact land managers directly wherever a wildfire exceeds 4,000 ha (10,000 acres).

Wildfires smaller than 4,000 ha are unlikely to encounter a single fuel treatment area, much less multiple treatments. Prior to the recent expansion of fuel treatment initiatives it was rare even for large wildfires to encounter more than one treatment. Unfortunately, any analysis of the effect of a single treatment must be based on pseudo-replicated samples (Hurlbert 1984), resulting in underestimated variance and compromised statistical tests. Such was the case with Fontainebleau, as well as all of Pollet and Omi's (2002) study sites. Few fuel treatment studies have been published based on samples from (approximately) replicated treatments and all but Cram and others (2006) relied on an analysis of remote sensing data that failed to control for the effects of weather and topography (for example, Weatherspoon and Skinner 1995; Martinson and others 2003, Finney and others 2005). However, since sampling Fontainebleau we have been able to restrict our investigations to wildfires that burned over at least three spatially dispersed areas that were similarly treated. We have now completed data collection from eight such study areas.

Once a wildfire is selected for investigation, we follow the procedures established by Pollet and Omi (2002) to minimize potential bias in locating sample plots. Plot locations are selected prior to any field visits and based solely on maps of treatment boundaries, roads, streams, vegetation, topography, and wildfire progression. Comparison plots are situated such that they straddle a treatment boundary, burned on the same day and under similar weather conditions, and have similar slope, aspect, elevation and tree species. We further seek to avoid areas that were a focus of fire control activities, as well as treatment boundaries defined by a significant fuel break, such as a major

road or stream. The straddle point along each treatment boundary is then chosen by random number generation, if any choice remains after all criteria are satisfied. The Fontainebleau site met all these criteria with the notable exception of a railroad separating the treated and untreated areas. While this was a substantial fuel break, it failed to stop fire spread; not once but twice. Further, the fire was not even curtailed by a much wider divided highway that included a mown median. We therefore concluded that any reduction in fire severity accomplished by the prescribed burns was undiminished by the presence of the railroad.

A final caveat for the Fontainebleau site is the unknown management history of the privately owned stand that served as our untreated control. While no activity has occurred in this stand since establishment of the Wildlife Refuge in 1975, its condition differed from the treated stand to such a degree that we find it difficult to believe three prescribed fires alone accomplished the difference. Rather, the untreated stand had probably been clearcut sometime in the past with no subsequent management (personal communication from Tony Wilder, Refuge Fire Management Officer). Nonetheless, the Fontainebleau site illustrates the differential consequences of fuels management and lack thereof when a wildfire occurs.

Conclusion

Like all studies of fuel treatment effectiveness, the data from the Fontainebleau fire are limited in many respects. Nonetheless, the results of this study provide a rare addition to a depauperate literature. Fuel treatment activities are expanding rapidly on public lands despite minimal empirical evidence to support their use. At least one beneficial consequence of this should be an increase in the number of wildfires that burn over multiple treatments, providing greater opportunity to achieve a semblance of replication and control in future retrospective studies of fuel treatment effectiveness. Thus fuel treatment activities are perhaps best viewed as experiments that provide potential learning opportunities. Knowledge must be gleaned from both the successes and the failures so that we might eventually define the conditions under which fuel treatments are an effective pre-suppression strategy for the mitigation of extreme wildfire behavior and effects. Every effort to collect empirical information from natural experiments such as that presented by the Fontainebleau fire brings us a step closer to this end.

Acknowledgments

We thank Malia Boyum for field assistance and Tony Wilder for facilitating our field visit and providing fire weather and behavior information. The Joint Fire Science Program funded this research.

Literature Cited

Alexander, M. E.; Lanoville, R. A. 2004. The international crown fire modeling experiment fuel treatment trials. Tall Timbers Fire Ecology Conference Proceedings 22: 222.

Anderson, H. E. 1982. Aids to determining fuel models for estimating fire behavior. Gen. Tech. Rep. INT-GTR-122. Ogden, UT: U.S. Department of Agriculture, Forest Service, Intermountain Research Station. 19 p.

Avery, T. E.; Burkhart, H. E. 1994. Forest measurements, 4th edition. New York, NY: McGraw-Hill Book Co. 408 p.

Carey, H.; Schumann, M. 2003. Modifying wildfire behavior – the effectiveness of fuel treatments. Santa Fe, NM: National Community Forestry Center Southwest Region Working Paper #2. 26 p.

Cram, D. S.; Baker, T. T.; Boren, J. C. 2006. Wildland fire effects in silviculturally treated vs. untreated stands of New Mexico and Arizona. Research Paper RMRS-RP-55. Fort Collins, CO: U.S. Department of Agriculture, Forest Service, Rocky Mountain Research Station. 28 p.

Cruz, M. G.; Alexander, M. E.; Wakimoto, R. H. 2005. Development and testing of models for predicting crown fire rate of spread in conifer forest stands. Canadian Journal of Forest Research 35: 1626-1639.

Fernandes, P. M.; Botelho, H. S. 2003. A review of prescribed burning effectiveness in fire hazard reduction. International Journal of Wildland Fire 12: 117-128.

Finney, M. A. 2001. Design of regular landscape fuel treatment patterns for modifying fire growth and behavior. Forest Science 47: 219-228.

Finney, M. A.; McHugh, C. W.; Grenfell, I. C. 2005. Stand- and landscape-level effects of prescribed burning on two Arizona wildfires. Canadian Journal of Forest Research 35: 1714-1722.

Fites-Kauffman, J. 2001. Real-time evaluation of effects of fuel-treatments and other previous land management activities on fire behavior during wildfires. Research proposal funded by the United States Departments of Agriculture and Interior Joint Fire Science Program.

Graham, R. T.; McCaffrey, S.; Jain, T. B. 2004. Science basis for changing forest structure to modify wildfire behavior and severity. Gen. Tech. Rep. RMRS-GTR-120. Fort Collins, CO: U.S. Department of Agriculture, Forest Service, Rocky Mountain Research Station. 43 p.

Martinson, E. J.; P. N. Omi; W. D. Sheppard. 2003. Fire behavior, fuel treatments, and fire suppression on the Hayman fire. Part 3. Effects of fuel treatments on fire severity. Gen. Tech. Rep. RMRS-114: 96-122. Fort Collins, CO: U.S. Department of Agriculture, Forest Service, Rocky Mountain Research Station.

Omi, P. N.; Kalabokidis, K. D. 1991. Fire damage on extensively versus intensively managed forest stands within the North Fork Fire, 1988. Northwest Science 65: 149-157.

Ottmar, R. D.; Burns, M. F.; Hall, J. N.; Hanson, A. D. 1993. CONSUME user's guide. Gen. Tech. Rep. PNW-GTR-304. Portland, OR: U.S. Department of Agriculture, Forest Service, Pacific Northwest Research Station. 118 p.

Platt, W. J.; Evans, G. W.; Rathburn, S. L. 1988. The population dynamics of a long-lived conifer (*Pinus palustris*). The American Naturalist 131: 491-525.

Pollet, J.; Omi, P. N. 2002. Effect of thinning and prescribed burning on crown fire severity in ponderosa pine forests. International Journal of Wildland Fire 11: 1-10.

Raymond, C. L.; Peterson, D. L. 2005. Fuel treatments alter the effects of wildfire in a mixed-evergreen forest, Oregon, USA. Canadian Journal of Forest Research 35: 2981-2995.

Rothermel, R. C. 1972. A mathematical model for predicting fire spread in wildland fuels. Research Paper INT-115. Ogden, UT: U.S. Department of Agriculture, Forest Service, Intermountain Research Station. 40 p.

Rothermel, R. C. 1991. Predicting behavior and size of crown fires in the northern Rocky Mountains. Research Paper INT-RP-438. U.S. Department of Agriculture, Forest Service, Intermountain Research Station. 46 p.

Ryan, K. C.; Noste, N. V. 1985. Evaluating prescribed fires. Gen. Tech. Rep. INT-GTR-182: 230-238. Ogden, UT: U.S. Department of Agriculture, Forest Service, Intermountain Research Station.

Sankoh, A. J.; Huque, M. F.; Dubey, S. D. 1997. Some comments on frequently used multiple endpoint adjustment methods in clinical trials. Statistics in Medicine 16: 2529-2542.

SAS Institute, Inc. 2001. The SAS system for windows, release 8.2. Cary, NC: The SAS Institute, Inc.

Skinner, C. N.; Ritchie, M. W.; Hamilton, T.; Symons, J. In press. Effects of prescribed fire and thinning on wildfire severity: the Cone fire, Blacks Mountain Experimental Forest. In: Proceedings of the 25th Vegetation Management Conference, Redding, CA.

Uitenbroek, DG. 2001. Simple interactive statistical analysis: Bonferonni correction. URL: http://home.clara.net/sisa/bonhlp.htm#Corr.

Van Wagner, C. E. 1973. Height of crown scorch in forest fires. Canadian Journal of Forest Research 3: 373-378.

Weatherspoon, C. P.; Skinner, C. N. 1995. An assessment of factors associated with damage to tree crowns from the 1987 wildfires in northern California. Forest Science 41: 430-451.