ROUTE MARKER

TYPICAL ID	ROUTE MARKER TYPE	ROUTE MARKER LOCATION	INFORMATION LOCATION	SUPPORT TYPE	SUPPORT SIZE	SUPPORT QUANTITY	COMMENTS
RTM–1							

ROUTE MARKER INFORMATION ORDER

NO.	DESCRIPTION
1	TRAIL IDENTIFICATION
2	ARROW
3	SPECIAL TRAIL DESIGNATION
4	BLAZE(R)
5	OTHER

ROUTE MARKER LOCATION ON TRAIL

L	LEFT SIDE
R	RIGHT SIDE
BOTH	BOTH SIDES

INFORMATION LOCATION ON SUPPORT

FR	FRONT SIDE
BA	BACK SIDE
BOTH	BOTH SIDES
OTHER	

SUPPORT TYPE

TR	TREE
WP	WOOD POST
SP	STEEL POST
FP	FLEXIBLE POST

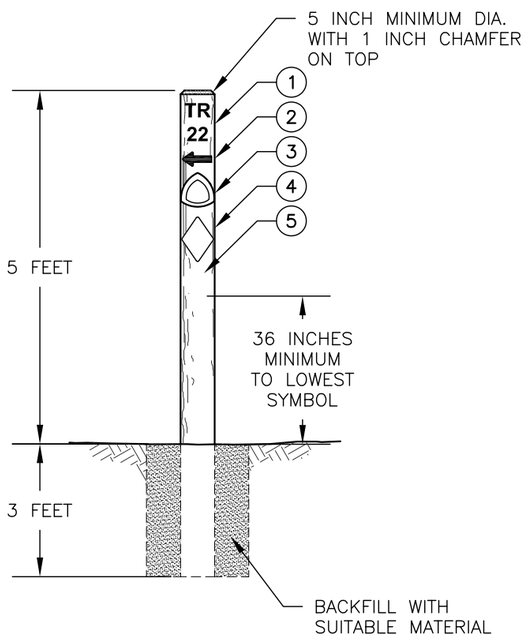

M

ROUTE MARKER INFORMATION

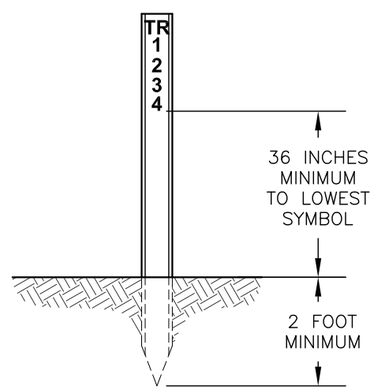

N

ROUTE MARKER ON FLEXIBLE POST

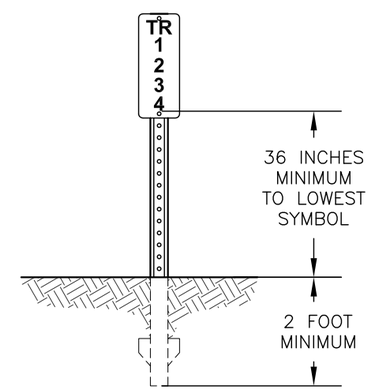

O

ROUTE MARKER ON STEEL U–CHANNEL OR TREE

NOTES:

1. REFER TO "EM–7100–15 SIGN AND POSTER GUIDELINES, FOR THE FS" FOR SIGN SPECIFICATIONS, MATERIALS, AND PLACEMENT.
2. CUT BLAZE NO DEEPER THAN NECESSARY FOR CLEAR VISIBILITY. CUT ON BOTH SIDES, VISIBLE FROM BOTH DIRECTIONS.
3. REFER TO EM 7100–15 FOR BLAZER COLOR.

U.S. DEPARTMENT OF AGRICULTURE
FOREST SERVICE

STANDARD TRAIL PLAN

PROJECT NAME & LOCATION

DRAWING NAME: **ROUTE MARKERS**

SECTION: **952 - ROUTE MARKERS**

TYPICAL ID: **RTM**

REVISION DATE: **XX/XX/XX**

NO SCALE

DRAWING NO.: **STD_952-01**

SHEET | OF