STACKED RAIL (WORM) FENCE

TYPICAL ID	SECTION TYPE	FENCE: BASE TYPE	FENCE: HEIGHT	RAIL: SIZE	RAIL: LENGTH	RAIL: PRESERV. TYPE	DISTANCE: C	DISTANCE: D	COMMENTS
SRF–1						P			

N/A WHEN NOT APPLICABLE

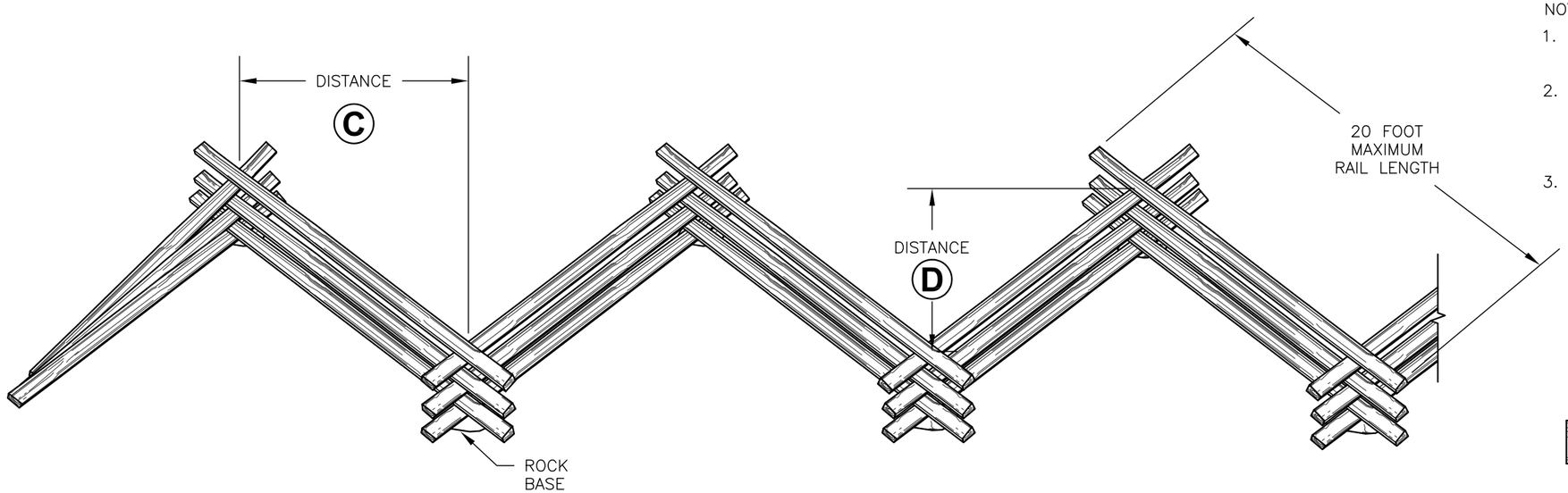

NOTE:

1. REMOVE AND DISPOSE OF DUFF AND TOP ORGANIC LAYERS DOWN TO MINERAL SOIL.
2. REFER TO THE PUBLICATION "FENCES" PREPARED BY THE MISSOULA TECHNOLOGY AND DEVELOPMENT CENTER FOR ADDITIONAL CONSTRUCTION DETAILS AND INSTALLATION PROCEDURES.
3. GATE LOCATIONS AS STAKED IN THE FIELD.

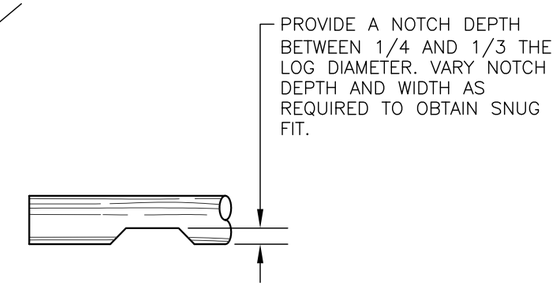

NOTCHING DETAIL

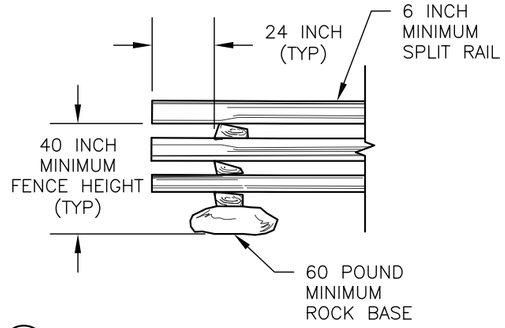

A TYPICAL SPLIT RAIL SECTION

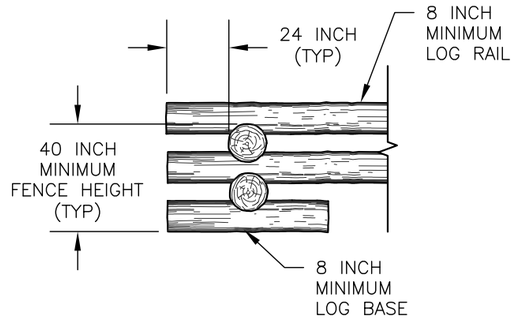

B TYPICAL LOG SECTION

PRESERVATIVE TREATMENT – (REFER TO AWPA USE CATEGORY SYSTEM)			
PRESERVATIVE TYPE	TREATMENT TYPE	USE CATEGORY	COMMENTS
P1	WB	UC4A	
P2	WB	UC3B	
P3			

TREATMENT TYPE

WB = WATERBORNE
OT = OIL–BORNE

USE CATEGORY

UC3B = ABOVE GROUND – EXPOSED
UC4A = GROUND CONTACT – GENERAL USE
UC4B = GROUND CONTACT – HEAVY DUTY

U.S. DEPARTMENT OF AGRICULTURE
FOREST SERVICE
STANDARD TRAIL PLAN

PROJECT NAME & LOCATION

DRAWING NAME
STACKED RAIL (WORM) FENCE

SECTION
941 - FENCES

TYPICAL ID
SRF

REVISION DATE
XX/XX/XX

NOT TO SCALE

DRAWING NO.
STD_941-50-01

SHEET
OF