STANDARD BOARDWALK

TYPICAL ID	SECTION TYPE	OVERALL WIDTH	SURFACE WIDTH	FOOTING MATERIAL			POST/SILLS/BACKWALLS				HEADER BEAM/STRINGERS/ DECK/CURB/RAILING SYSTEM			COMMENTS
				TYPE	DEPTH	WIDTH	POST HEIGHT	POST EMBEDMENT DEPTH	SPECIES	PRESERV. TYPE	DECK SIZE	SPECIES	PRESERV. TYPE	
SB1–1				F						P			P	

N/A WHEN NOT APPLICABLE

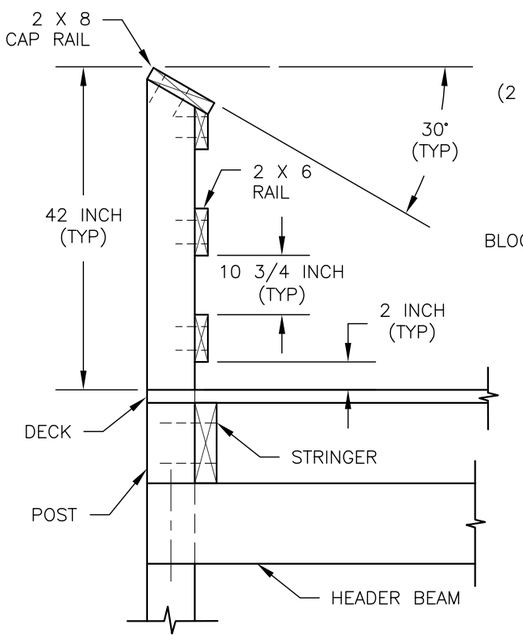

RAIL SYSTEM DETAIL

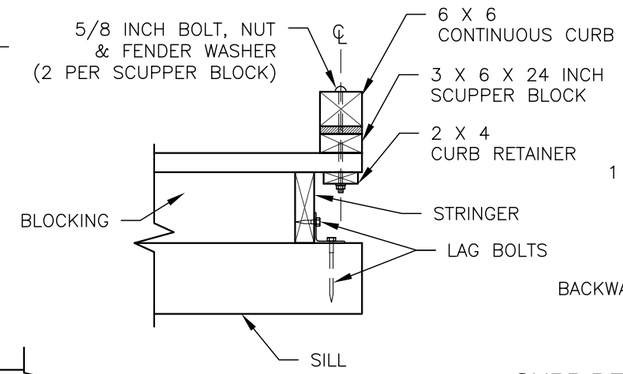

BACKWALL NOT SHOWN FOR CLARITY

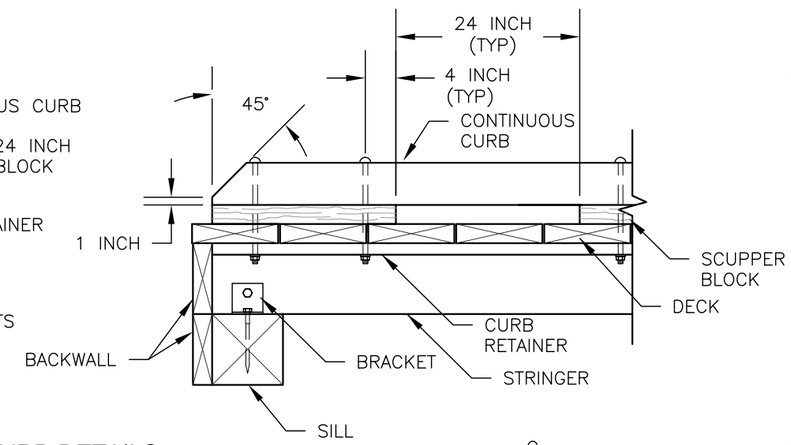

CURB DETAILS

NOTES:

1. DESIGN LOAD: 100 PSF PEDESTRIAN LOAD.
2. ALL MATERIAL TYPE SHALL BE DOUGLAS FIR OR SOUTHERN PINE NO. 2 OR BETTER AS SPECIFIED IN THE ABOVE TABLE.
3. ALL FASTENERS SHALL BE GALVANIZED.
4. FASTENERS:
   - DECKING: 60d 6 INCH RING SHANK NAILS OR DECK SCREWS 2 PER DECK STRINGER CONNECTION.
   - RAILING: NO. 10 X 4 INCH LONG WOOD SCREWS 2 PER RAIL POST CONNECTION.
   - STRINGERS & BACKWALLS: 40d 5 INCH LONG RING SHANK NAILS.
5. ALERNATIVE FOR 7/8 BOLTS FOR HEADER BEAM IS BRACKET WITH AN ALLOWABLE LOAD OF 1100 LBS EACH SIDE.

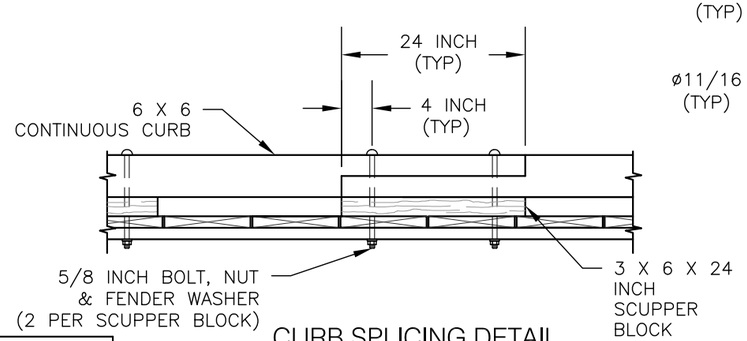

CURB SPLICING DETAIL

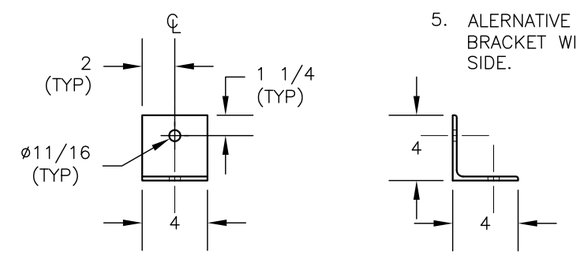

BRACKET DETAIL

FOOTING MATERIAL

TYPE	MATERIAL	GRADATION	COMMENTS
FT1	CONCRETE		
FT2	AGGREGATE		
FT3			

PRESERVATIVE TREATMENT – (REFER TO AWPA USE CATEGORY SYSTEM)			
PRESERVATIVE TYPE	TREATMENT TYPE	USE CATEGORY	COMMENTS
P1	WB	UC4A	
P2	WB	UC3B	
P3			

TREATMENT TYPE

WB = WATERBORNE
OT = OIL–BORNE

USE CATEGORY

UC3B = ABOVE GROUND – EXPOSED
UC4A = GROUND CONTACT – GENERAL USE
UC4B = GROUND CONTACT – HEAVY DUTY

SHEET 1 OF 3

U.S. DEPARTMENT OF AGRICULTURE
FOREST SERVICE
STANDARD TRAIL PLAN

PROJECT NAME & LOCATION

DRAWING NAME
STANDARD BOARDWALK

SECTION
938 - BOARDWALKS

TYPICAL ID
SB1

REVISION DATE
XX/XX/XX

NO SCALE

DRAWING NO.
STD_938-10-01

SHEET
OF