PUNCHEON WITHOUT DECKING

		MUD SILL		STRINGER			BACKWALL		
TYPICAL ID	WIDTH	SPECIES	PRESERV. TYPE	TYPE	SIZE	PRESERV. TYPE	SIZE	PRESERV. TYPE	COMMENTS
NDP–1			P					P	

N/A WHEN NOT APPLICABLE

NOTES:

1. PRE–DRILL HOLES FOR FASTENERS TO PREVENT SPLITTING OF LOGS OR SAWN TIMBERS.
2. RECESS END OF REBAR 1/2 INCH BELOW TOP OF STRINGERS.
3. COMPACT BACKFILL IN 6 INCH LIFTS UNTIL NO VISUAL DISPLACEMENT.
4. ALL FIELD DRILLED HOLES AND CUTS SHALL BE FIELD TREATED.
5. FINAL DECK ELEVATION FOR RUNNING PLANKS OR DECKING SHALL BE NO MORE THAN 1/2 INCH DIFFERENCE IN ELEVATION.

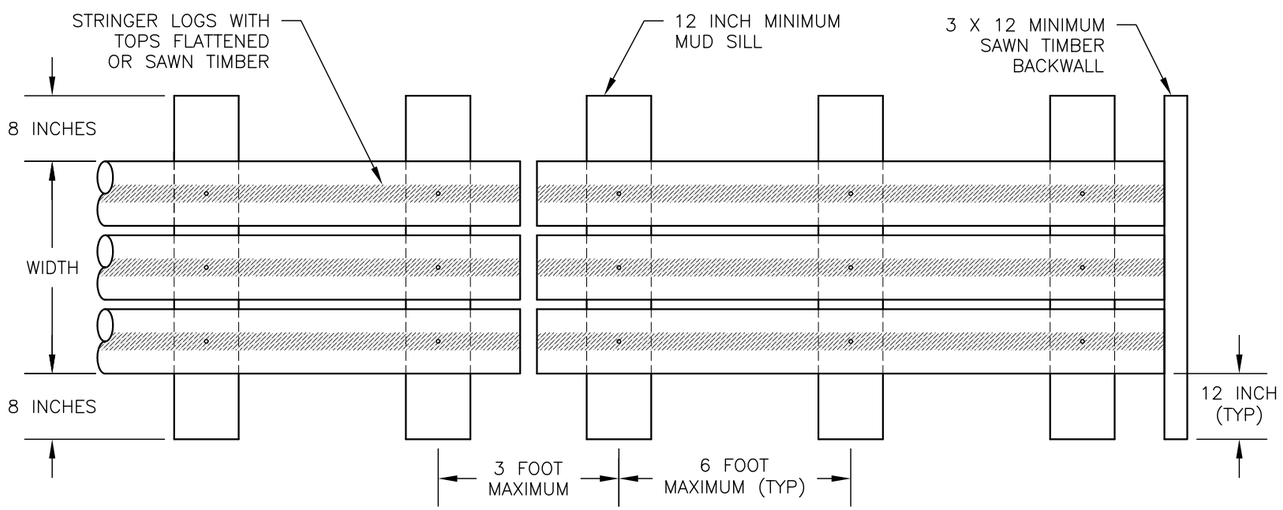

PLAN VIEW

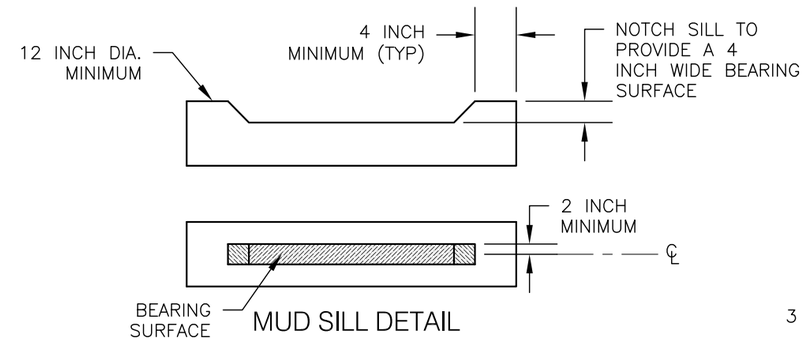

MUD SILL DETAIL

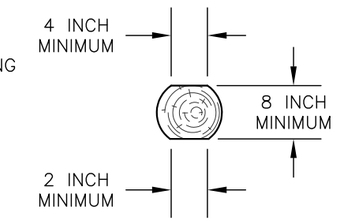

LOG STRINGER DETAIL

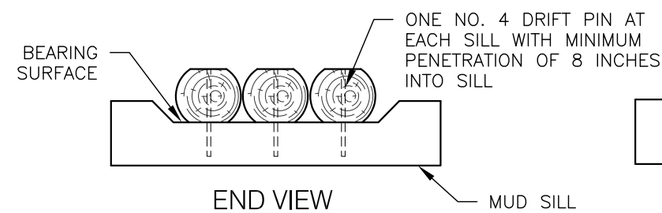

END VIEW
LOG STRINGER

PLACE ROUND LOG STRINGERS AS CLOSE AS POSSIBLE WITH NO GAPS GREATER THAN 2 INCHES

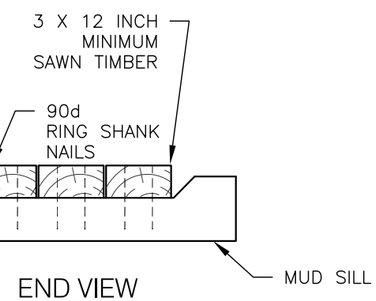

END VIEW
SAWN TIMBER STRINGER

PLACE SAWN TIMBER STRINGERS WITH A MAXIMUM GAP OF 3/8 INCH

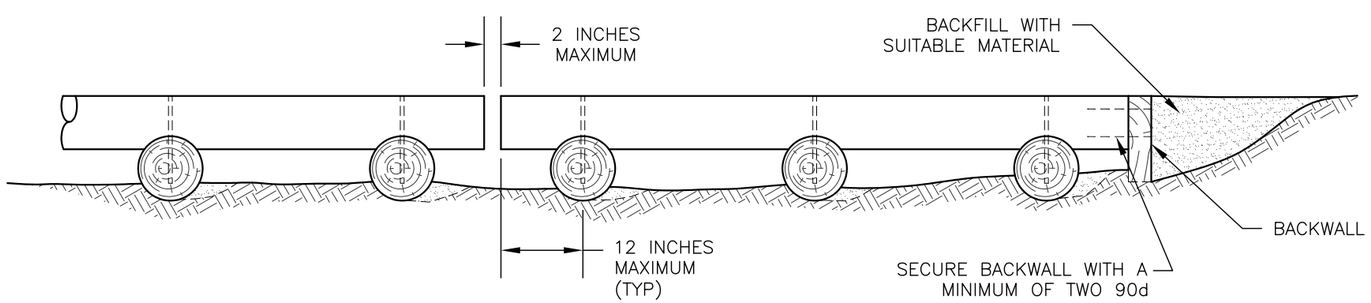

ELEVATION VIEW

PRESERVATIVE TREATMENT – (REFER TO AWPA USE CATEGORY SYSTEM)			
PRESERVATIVE TYPE	TREATMENT TYPE	USE CATEGORY	COMMENTS
P1	WB	UC4A	
P2	WB	UC3B	
P3			

TREATMENT TYPE

WB = WATERBORNE
OT = OIL–BORNE

USE CATEGORY

UC3B = ABOVE GROUND – EXPOSED
UC4A = GROUND CONTACT – GENERAL USE
UC4B = GROUND CONTACT – HEAVY DUTY

U.S. DEPARTMENT OF AGRICULTURE
FOREST SERVICE

STANDARD TRAIL PLAN

PROJECT NAME & LOCATION

DRAWING NAME
PUNCHEON WITHOUT DECKING

SECTION
934 - PUNCHEONS

TYPICAL ID
NDP

REVISION DATE
XX/XX/XX

NO SCALE

DRAWING NO.
STD_934-20-01

SHEET
OF