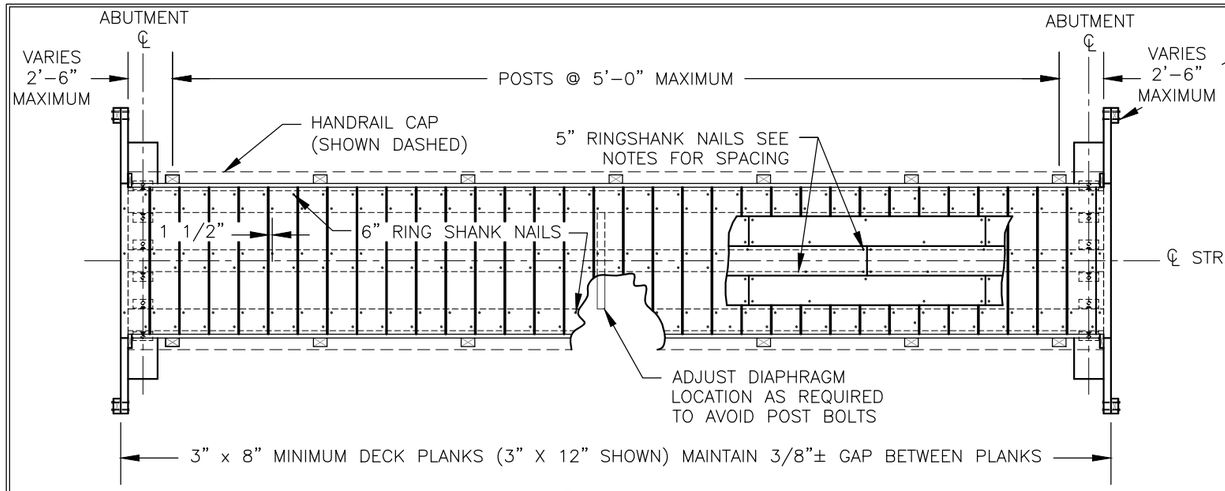

PLAN

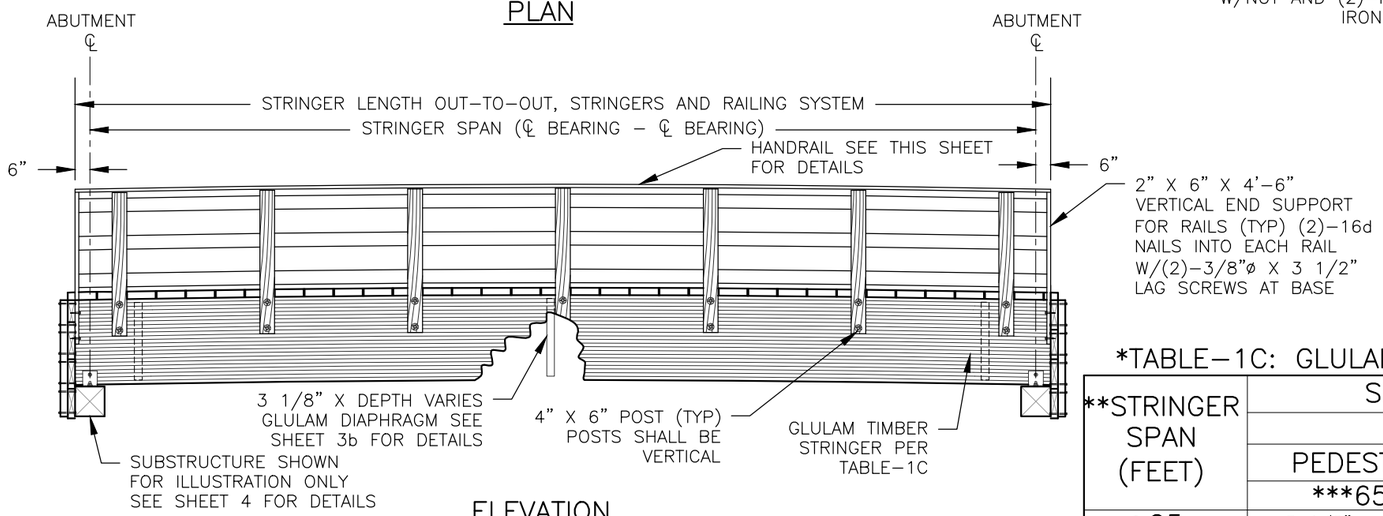

ELEVATION

GRADE SHOWN = 0.0%

- FABRICATE GLULAM STRINGERS WITH CAMBER BASED ON A 900 FOOT RADIUS.
- RUNNING PLANKS NOT SHOWN FOR CLARITY.

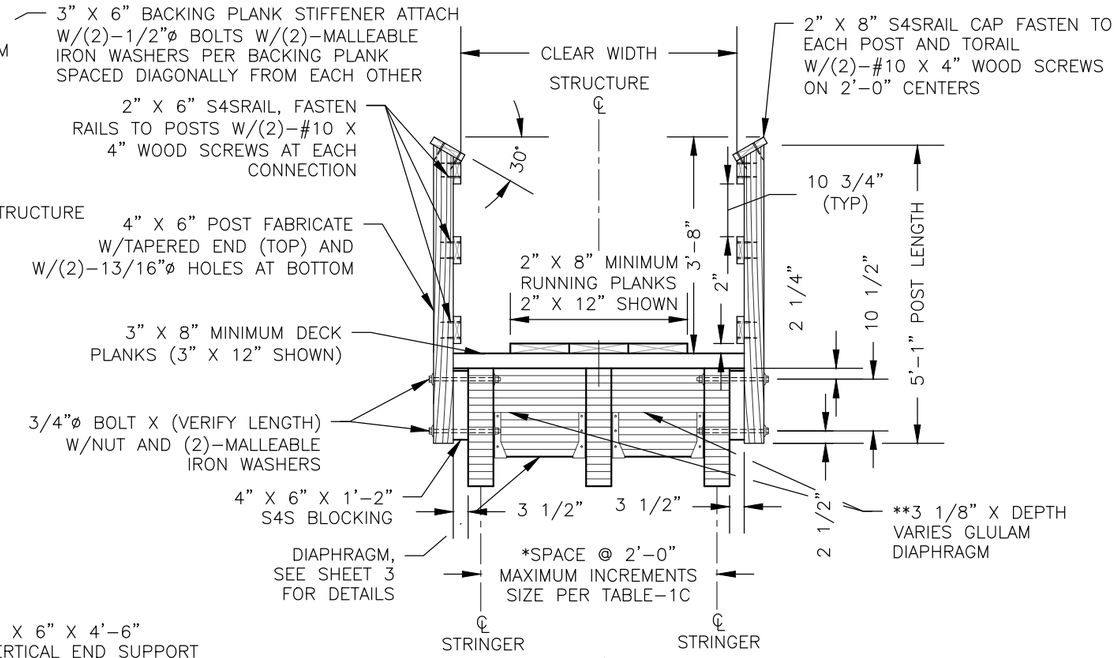

BRIDGE W/RAILING SYSTEM

DECK SECTION W/STRINGERS @ 2'-0" O.C.

*MINIMUM NUMBER OF STRINGERS IS 3.DIAPHRAGM DEPTH SHALL BE ** APPROXIMATELY 70% OF STRINGER DEPTH

*TABLE-1C: GLULAM STRINGER SIZE REQUIREMENTS – LRFD

**STRINGER SPAN (FEET)	SPECIES – DF/DF, COMBINATION SYMBOL 24F – V4				
	DESIGN LOADING IN POUNDS PER SQUARE FOOT				
	PEDESTRIAN LIVE LOAD		GROUND SNOW LOAD		
	***65	90	120	150	200
●25	5 1/8" x 15"	5 1/8" x 15"	5 1/8" x 15"	5 1/8" x 15"	5 1/8" x 16 1/2"
●30	5 1/8" x 15"	5 1/8" x 16 1/2"	5 1/8" x 16 1/2"	5 1/8" x 18"	5 1/8" x 19 1/2"
▲35	5 1/8" x 18"	5 1/8" x 19 1/2"	5 1/8" x 19 1/2"	5 1/8" x 21"	5 1/8" x 22 1/2"
▲40	5 1/8" x 21"	5 1/8" x 22 1/2"	5 1/8" x 21"	5 1/8" x 22 1/2"	5 1/8" x 25 1/2"
▲45	5 1/8" x 24"	5 1/8" X 25 1/2"	5 1/8" X 24"	5 1/8" x 25 1/2"	5 1/8" X 28 1/2"
■50	5 1/8" X 25 1/2"	5 1/8" X 28 1/2"	5 1/8" X 27"	5 1/8" x 28 1/2"	6 3/4" x 28 1/2"
■55	5 1/8" X 28 1/2"	5 1/8" X 31 1/2"	5 1/8" X 30"	5 1/8" x 31 1/2"	6 3/4" X 31 1/2"
■60	5 1/8" X 31 1/2"	6 3/4" X 31 1/2"	6 3/4" X 30"	6 3/4" X 31 1/2"	6 3/4" X 34 1/2"

●INSTALL DIAPHRAGMS AT MID-SPAN AND WITHIN A DISTANCE OF THE DEPTH FROM THE ABUTMENTS
▲INSTALL DIAPHRAGMS AT THIRD POINTS OF SPAN AND WITHIN A DISTANCE OF THE DEPTH FROM THE ABUTMENTS
■INSTALL DIAPHRAGMS AT QUARTER POINTS OF SPAN AND WITHIN A DISTANCE OF THE DEPTH FROM THE ABUTMENTS

* STRINGER SIZE SHALL BE THE LARGER OF THE PEDESTRIAN OR GROUND SHOW LOAD SIZE REQUIRED FOR THE SITE CONDITIONS

** STRINGER LENGTH EQUAL TO STRINGER SPAN PLUS ONE FOOT

*** REQUIRES REGIONAL BRIDGE ENGINEER APPROVAL

NOTES:

1. FASTEN DECK PLANKS TO STRINGERS WITH TWO ROWS 60d (6-INCH) RING SHANK NAILS PER PLANK AT EACH STRINGER. ALTERNATE CENTERS.
2. FASTEN RUNNING PLANKS TO DECK WITH 40d (5-INCH RING SHANK) NAILS AT 24-INCHES SPACING. ALTERNATE CENTERS WITH TWO AT EACH END.
3. SPLICE RAILS AT POSTS. RAILS SHALL BE CONTINUOUS FOR TWO POST SPACES. DO NOT LOCATE MORE THAN ONERAIL SPLICE AT ANY ONE POST.
4. THE MINIMUM STRINGER DEPTH FOR BRIDGES WITH PEDESTRIAN RAILS IS 15-INCHES.
5. BRIDGES WITH STRINGER DEPTHS LESS THAN 15-INCHES SHALL HAVE CURBS ONLY.

U.S. DEPARTMENT OF AGRICULTURE
FOREST SERVICE

STANDARD TRAIL PLAN

PROJECT NAME & LOCATION

DRAWING NAME
GLULAM STRINGER TRAIL BRIDGE

SECTION
963 - GLULAM TRAIL BRIDGE

TYPICAL ID
GSB

REVISION DATE

NOT TO SCALE

DRAWING NO.
STD_963-10-02c

SHEET OF