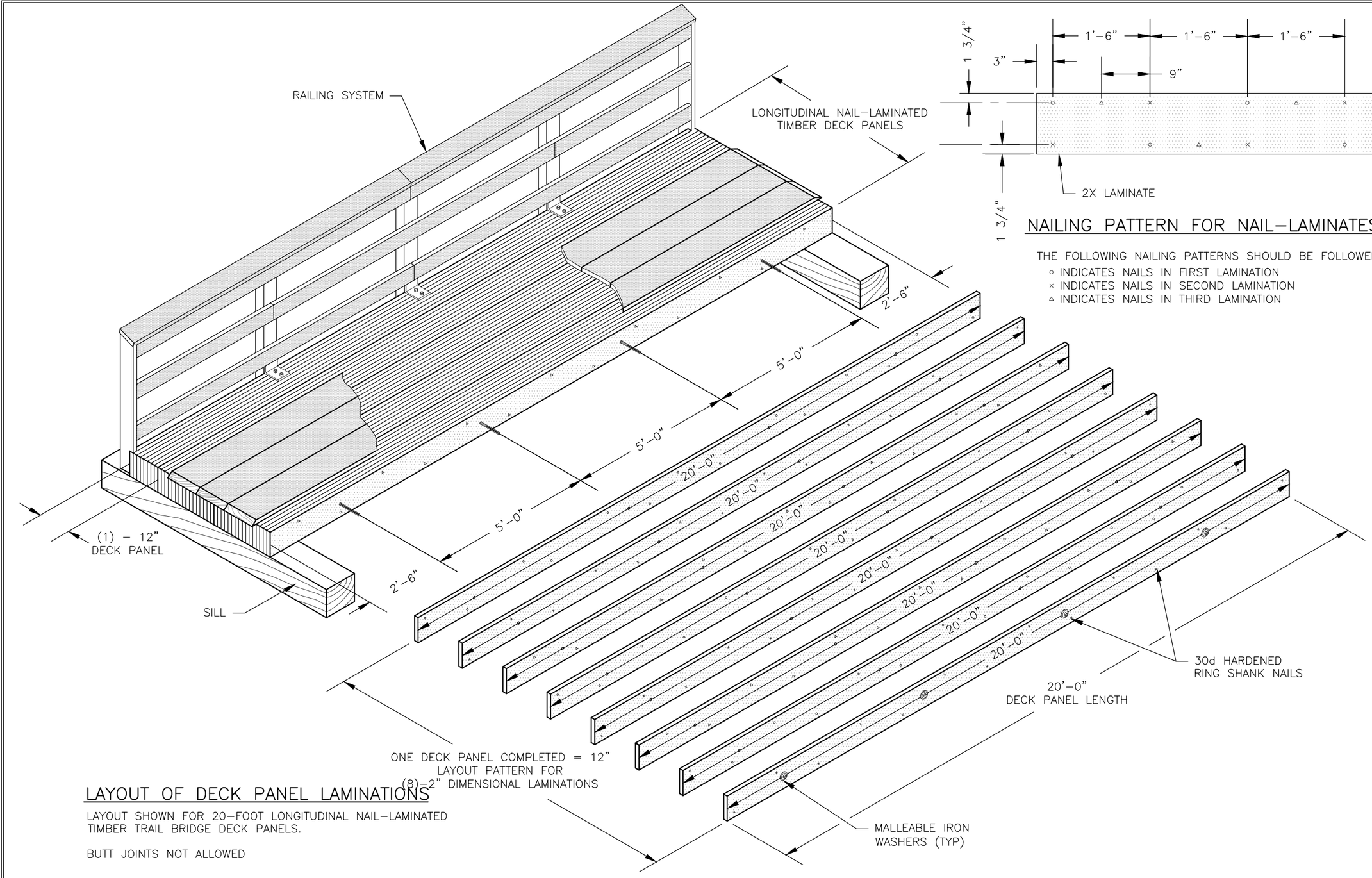

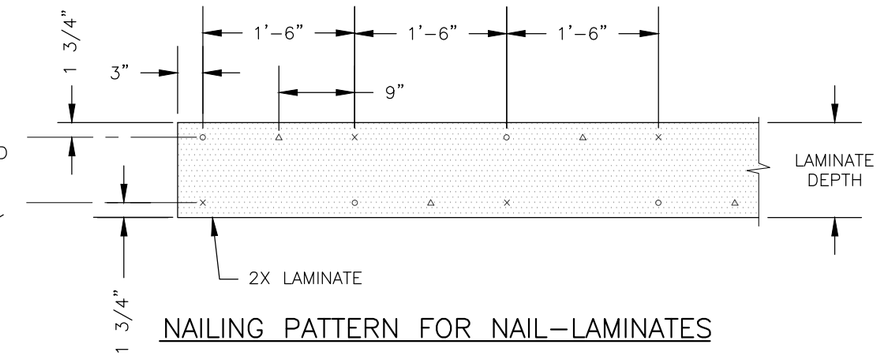

NAILING PATTERN FOR NAIL–LAMINATES

THE FOLLOWING NAILING PATTERNS SHOULD BE FOLLOWED:

- ○ INDICATES NAILS IN FIRST LAMINATION
- × INDICATES NAILS IN SECOND LAMINATION
- △ INDICATES NAILS IN THIRD LAMINATION

LAYOUT OF DECK PANEL LAMINATIONS

LAYOUT SHOWN FOR 20–FOOT LONGITUDINAL NAIL–LAMINATED TIMBER TRAIL BRIDGE DECK PANELS.

BUTT JOINTS NOT ALLOWED

SHEET 3 OF 5

U.S. DEPARTMENT OF AGRICULTURE
FOREST SERVICE

STANDARD TRAIL PLAN

PROJECT NAME & LOCATION

DRAWING NAME **LONGITUDINAL NAIL- LAMINATED TIMBER TRAIL BRIDGE**

SECTION **962 - SAWN TIMBER TRAIL BRIDGE**

TYPICAL ID **LNL**

REVISION DATE

NOT TO SCALE

DRAWING NO. **STD_962-20-03c**

SHEET OF