Timber Supply Projections for Northern New England and New York: Integrating a Market Perspective

Paul E. Sendak, *USDA Forest Service, Northeastern Research Station, P.O. Box 640, Durham, NH 03824-0640;* **Robert C. Abt,** *North Carolina State University, Department of Forestry, Raleigh, NC 27695; and* **Robert J. Turner,** *R.J. Turner Company, Bristol, VT 05443.*

ABSTRACT: *The North East State Foresters Association (NEFA) commissioned a study that resulted in the publication of a report titled, "A Forest Resource Model of the States of New York, Vermont, New Hampshire, and Maine." In this article we used the integrated NEFA computer simulation framework to go beyond the reported results and further explore the effects on the forest resource in terms of timber harvest, inventory, and price under various market and demand assumptions. Five scenarios were run through the integrated SRTS-ATLAS model to project long-run effects on timber inventory (growing stock) and price. Besides reflecting differing assumptions about demand and supply, these scenarios defined different markets, thus affecting how the wood harvest was allowed to move across the region in response to demand. Regionally, at the end of the 50 yr projection period, cubic-foot growth and harvest were approximately in balance in the* Reference Case, *the scenario that we felt was most likely. Initial inventory on all timberland was 66.7 billion ft^3. By 2050, inventory volume increased 13% to 75.4 billion ft^3. Net growth declined over the 50 yr period from 35.3 to 32.1 ft^3 ac^{-1} yr^{-1}, while harvest increased from 26.6 to 31.9 ft^3 ac^{-1} yr^{-1}. Regional real price increased approximately 1.1% yr^{-1} over the period. Changes in the resource situation in one state affect the situation in the other states. There is a mutual dependence in markets that policy makers need to recognize. The integration of a market module into the NEFA modeling process added the interplay of market forces and improved upon the policy information available from the model. North. J. Appl. For. 20(4):175–185.*

Key Words: Timber supply, markets, economic modeling, Maine, New Hampshire, New York, Vermont.

Until recently, few northeastern states had attempted developing long-term timber supply models. Maine is an exception and completed its most recent analysis of long-term timber supply in 1998 (Gadzik et al. 1998). The usefulness of the approach taken in Maine led to interest in nearby states for a similar analysis for the region. The North East State Foresters Association (NEFA) commissioned a study that resulted in a report titled, "A Forest Resource Model of the States of New York, Vermont, New Hampshire, and Maine" (Turner and Caldwell 2001). The computer simulation framework uses the most recent USDA Forest Service Forest Inventory and Analysis (FIA) data for the four states and projected the forest resource situation to 2050. The report explores the effects of a number of social and biological factors on the forest resource. It examines the effects of markets on timber supply by integrating a market module and by assuming a constant regional harvest for timber and comparing that to an increased harvest scenario. In this article we used the integrated NEFA computer simulation framework to go beyond the results of Turner and Caldwell (2001) and further explore the effects on the forest resource in terms of timber harvest, inventory, and price under various market and demand assumptions.

Forests cover an estimated 45.7 million ac (74% of the land area) in the states of Maine, New Hampshire, New York, and Vermont, the area referred to as the NEFA states in this article. Ninety-two percent of the timberland in the NEFA region is privately owned, 29% by industrial and 63% by nonindustrial owners. Maine's forest economy is heavily dependent on pulpwood production and on softwoods such as spruce, balsam fir, and eastern white pine. Since 1952, Maine on average has accounted for almost a third of the timber harvested in the 12 northeastern states (Field 1997). Maine accounts for over half of the harvest in the

NOTE: Paul E. Sendak can be reached at (603) 868-7672; Fax: (603) 868-7604; E-mail: psendak@fs.fed.us. The authors thank the North East State Foresters Association and the USDA Forest Service, Northeastern Area, for partial funding of this study. Copyright © 2003 by the Society of American Foresters.

Table 1. Assumptions used in scenarios for runs of the integrated SRTS and ATLAS model for the four-state study area.

Scenario number and description	Wood market	Annual increase in demand (%)	Total timberland area change (ac)
1. Reference	Region	1	480,000
2. Constant demand	Region	0	480,000
3. High demand	Region	2	480,000
4. Pessimistic land use change	Region	1	(908,800)
5. NH pessimistic land use change	New Hampshire	1	(1,038,000)

NEFA region but has only a third of the inventory. Moving west into New York, the hardwood resource becomes more dominant and the market is oriented more toward sawlog production. New York accounts for 25% of the harvest in the NEFA region but has 39% of the region's timber inventory. The dominant FIA forest-type groups—northern hardwoods, spruce/fir, white/red pine, aspen/birch, and oak/hickory—account for more than 90% of the regional timberland area.

From 1961 to 2000, roundwood (sawlogs and pulpwood) harvest in Maine increased at an average annual rate of 1.50% (79% period increase), while real stumpage price for roundwood in Maine increased at an annual rate of 2.16% (130% period increase). In Vermont, roundwood harvest has increased 2.07% annually (122% period increase) from 1961 to 2000, while real price increased 3.35% annually (81% period increase) from 1982 (earliest reported prices) to 2000. Comparable annual harvest statistics do not exist for New Hampshire and New York although both states have stumpage price series that date back to 1961.

Econometric modeling of the timber market in the Northeast, particularly the hardwood segment, has been limited by lack of reliable data at a scale appropriate to address the inherent complexity of the market (Adams and Haynes 1996). They note that hardwood lumber output in the northeastern and northcentral regions has been relatively stable despite widely fluctuating product prices and production costs. But hardwood lumber is only one of many products produced in the region. Other products include: softwood lumber, dimension, and timbers; pulp and paper products from hardwood and softwood; hardwood and softwood plywood; and engineered wood products such as oriented strand board. Wood wastes from logging and sawmills are converted to pulp chips and fuel. Recent advances in technology utilize spruce and fir from commercial thinnings down to 6.5 in. stump diameters to produce 2 × 4 and 2 × 3 in. dimension lumber, thus blurring the size differences separating sawlogs and pulpwood.

In spite of the complexity in northeastern markets, we felt that the NEFA computer simulation framework, which included certain basic market principles, could provide insight into the operation of those markets. We know that economic forces determine timber harvest and that future harvests will be affected by future demands and resource availability. The Sub-Regional Timber Supply model or SRTS has been used over the last 10 yr or more to explore a number of different forestry issues in the South (Abt et al. 2000). The market module from SRTS was linked to the Aggregate Timberland Assessment System model or ATLAS (Mills and Kincaid 1992, Turner and Caldwell 2001). The linkage of ATLAS and SRTS provided a mechanism to assess the potential implications of market adjustments to timber supply projections in the NEFA States.

The following five scenarios were run through the integrated SRTS-ATLAS model to project long-run effects on timber inventory (growing stock) and price (Table 1). Besides reflecting differing assumptions about demand and supply, scenario five defined different markets, thus affecting how the wood harvest was allowed to move across the region in response to demand.

1. Wood was allowed to move freely among states to satisfy harvest requests on a regional basis under an assumption of an increased demand of 1% yr^{-1} with an expected net increase in regional timberland area of 480,000 ac (Turner and Caldwell 2001).

2. Demand was assumed to remain constant; wood movement and timberland area as in 1.

3. Demand was assumed to increase at 2% yr^{-1}; wood movement and timberland area as in 1.

4. Loss of timberland was expected to accelerate so that at the end of 50 yr there was a regional net loss of 908,800 ac. Most of this loss was allocated to New Hampshire and to a lesser extent, Maine. Demand and wood movement in response to harvest requests was as in 1.

5. Since most timberland area loss was expected to occur in New Hampshire in both the *Reference Case* (1) and *Pessimistic Land-Use Change Case* (4) (Table 2), New Hampshire was examined independently in a separate run.

The scenarios resulted from collaboration between the NEFA technical advisory group and the modeling team. Trends in key variables such as stumpage prices and timber harvests, expectations of possible future changes, and projections of the timber situation in the Northeast (USDA Forest Service 2002) helped identify the scenarios.

Table 2. Change in area of timberland from 2000 to 2050 under two different land use change scenarios by state and NEFA region.

State	Change in timberland	
	Reference case	Pessimistic case
	(ac)	
Maine	(1,000)	(410,000)
New Hampshire	(188,000)	(1,038,000)
Vermont	24,000	12,000
New York	645,000	527,200
Regional net change	480,000	(908,800)

Ecosystem Modeling with Atlas and FlexFIBER

A technical group advised the modeling team on model selection and formulation of scenarios for both the Maine study (Gadzik et al. 1998) and NEFA study. The ATLAS model was used as the primary modeling framework because it had been used to integrate FIA data in regional timber supply projections. ATLAS is the model used for RPA (Renewable Resource Planning Act of 1974) timber resource projections by the USDA Forest Service (USDA Forest Service 1989). ATLAS provides an open, robust structure for integrating inventory, management, growth, and land-use change. This allows the modeler to design and articulate the model's structure in a way that reasonably represents the complexity of the system being modeled—in this case the diverse forests of the NEFA states. ATLAS is an "accounting" type model; it can organize and report on a large set of strata and associated actions, but the modeler must program the actions that apply to each stratum over time. Prior to the Maine study, ATLAS had been primarily used to model even-aged forests with well-defined management and growth trajectories. For both the Maine and NEFA study, new approaches were developed to portray the complexity of multi-aged, mixed-species stands that lacked empirical growth estimates. These new approaches helped define the structure of the model and are summarized below.

Vegetative Habitats

The core of the NEFA model uses FIA data to describe current inventory and projections of growth, harvest, and land use to describe expected changes to the inventory over time. To capture geographically and ecologically significant aspects of the inventory in the model we classified FIA plots by state into various vegetative types. The majority of acres were assigned to one of six "ecological habitats," consistent with the requirements of the FlexFIBER growth model (Brann and Solomon 2001, Solomon et al. 1995). These habitats, roughly analogous to natural community types, influence assumptions about site productivity and the succession of species during a growth simulation. The six available FlexFIBER habitats were sugar maple/ash, beech/red maple, oak/white pine, hemlock/red spruce, spruce/fir, and cedar/black spruce. In addition to the six FlexFIBER habitats, special classes were added for softwood plantations, deer wintering areas (Maine only), high-yield (Maine only)(Turner and Caldwell 2001), Allegheny hardwoods (New York only), and oak/hickory (New York only). These additional types accounted for only about 7.3% of the total timberland area. Four primary FlexFIBER vegetative habitat types, sugar maple/ash, beech/red maple, oak/white pine, and spruce/fir, accounted for 80% of the timberland in the NEFA region (Figure 1).

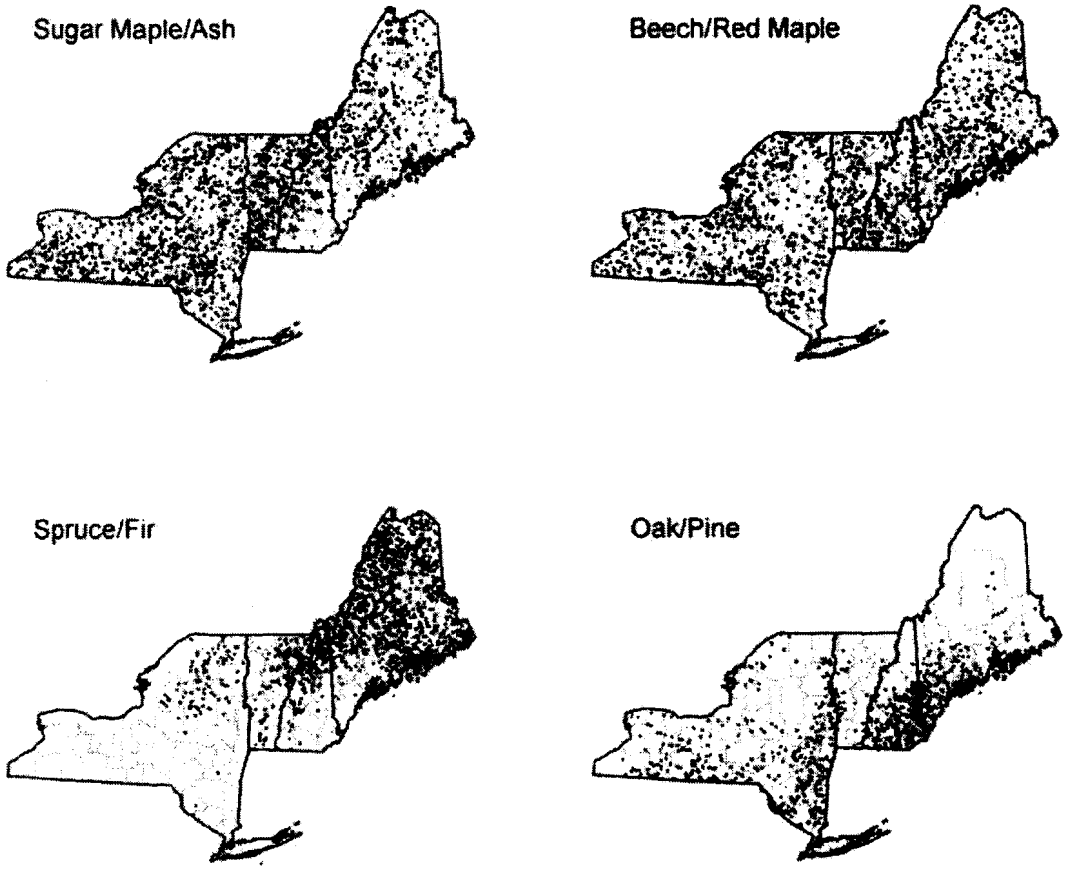

Figure 1. Distribution of FIA plots by habitat type for the four major habitats in Maine, New Hampshire, New York, and Vermont: sugar maple/ash, beech/red maple, spruce/fir, and oak/pine.

Volume Classes and Yield Curve Development

ATLAS expects to see inventory arrayed by age class. The previous ATLAS modeling project in Maine (Gadzik et al. 1998) considered several approaches to estimate stand age for FIA data, but all were deemed inadequate. Instead of age classes, the Maine project chose to classify and manipulate stands in 10 yr *volume* classes. The same approach was employed here. It was necessary to replace the volume-over-age relationship of the typical yield curve with a volume-over-time relationship. While future growth is only partially dependent on current volume, stand volume often drives management actions and harvest decisions. In this sense, the volume-over-time relationship had a pragmatic, operational basis. This arrangement is consistent with ATLAS yield table requirements as long as 10 yr volume class midpoints are approximately equivalent to the volume growth over the same period. Using FlexFIBER output, and empirical and other published yield curves, 10 yr volume class midpoints were developed for each habitat and all plots were assigned a 10 yr volume class based on their current growing stock volume.

Typically, yield curves for ATLAS formulations are developed empirically from FIA data. In addition to the obstacle presented by unreliable or missing stand age, Seymour and Lemin (1991) indicate that past attempts to develop empirical yield tables from FIA data suffer from insufficient plot data and concentration of high-graded stands in older age classes. We chose to simulate growth by submitting plots in habitat/volume class groups to FlexFIBER. FlexFIBER was modified to allow species present in the understory to be included in the ingrowth for the plot. This feature greatly improved the representation of understory species in stands and, depending on those species present, had a significant impact on projected volume.

Management

Management was characterized in general terms by describing three harvest removal classes (relative to volume prior to harvest): 0 to 50% volume removed, 50 to 80% removed, and 80 to 100% removed. By examining the FIA records of actual removals in each of these classes, estimates of volume harvested were developed for each class. The final structure of the strata in the ATLAS model is illustrated in Figure 2. Each combination of state, habitat, and removal class represented a stratum or "management unit" within ATLAS. Harvests were assigned to groupings of these management units into "harvest units." The scenarios described in this study manipulated collections of harvest units as "markets."

Land-Use Change

Any long-term model examining regional resource supply must consider changes in the area of productive forest over time. Estimates of resource availability and wood supply are influenced by area of timberland, which is influenced in turn by growing populations, increased development, and changing attitudes toward land use and harvesting. Turner and Caldwell (2001) identified two land-use change scenarios based on a review of current land-use studies, historical trends, and projections of census data by FIA region (Table 2). The first (*Reference Case*) assumes a continuation of recent trends. The second (*Pessimistic Case*) assumes accelerated timberland loss concentrated in near-urban areas.

Modeling the Market

SRTS Model Structure

SRTS was developed to provide an economic overlay to traditional timber inventory models, e.g., ATLAS, and to develop a consistent methodology for disaggregating the impacts of national and global models, e.g., the Timber Assessment Market Model (TAMM) (Abt 1989, Adams and Haynes 1996). In an inventory model, the focus is usually on how harvest scenarios affect inventory levels in a particular region. The recent Maine report is an example (Gadzik et al. 1998). This type of analysis provides data on the biological consequences of different harvest levels. It does not allow for economic adjustments to changes in harvest or inventory. In SRTS, the potential price and harvest consequences of demand shifts and supply responses across supply regions are modeled consistently.

Market Module

A "market" in SRTS is a collection of ATLAS harvest units deemed to be in competition. The ATLAS structure allowed us to define "markets" as harvest-unit groupings by habitat type across states, across regions, or across both regions and habitats. Each harvest unit began the simulation with a harvest allocation based on an estimate of year 2000 harvest by state, distributed across habitat types proportional to the inventory in each habitat.

SRTS models harvest unit i, year t harvest quantities as determined by the supply function:

$$Q_{it}^{S} = V_{it} \cdot P_t^{\beta} \cdot I_{it}^{\gamma}$$

And the demand function:

$$Q_t^{D} = Z_t \cdot P_t^{\alpha}$$

With the equilibrium condition:

$$Q_t^{D} = \sum_i Q_{it}^{S}$$

Harvests in unit i at time t, Q_{it}, are determined by finding the price P_t, such that the sum of harvest over all harvest units equals the demand quantity. This price is conditional on beginning of period inventory, I_{it}, in each harvest unit and on other supply and demand shifters (V_{it}, Z_t).

We assumed supply-price elasticities, β, of 0.31 for softwood-dominated vegetation types and 0.26 for hardwood vegetation types and a supply-inventory elasticity, γ, of 1 based on estimates for the northeast region (Adams and Haynes 1996). We assumed a demand-price elasticity, α, of 0.5 to reflect inelastic timber demand. Our results were dependent on the assumptions we made in building and calibrating the models. The structure of the supply function

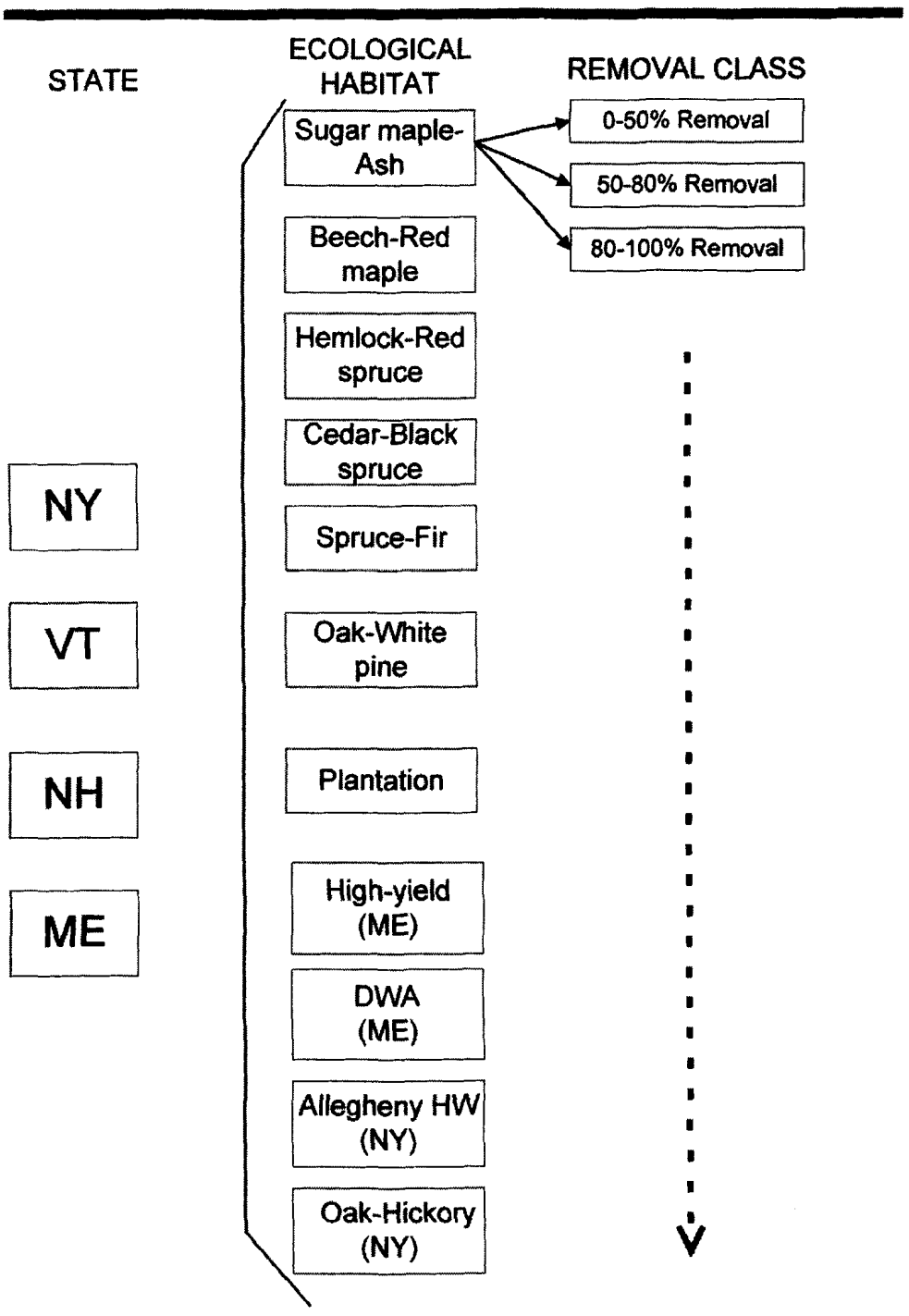

Figure 2. Schematic of ATLAS management units in the NEFA study.

is consistent with recent empirical analyses of timber supply (Adams and Haynes 1996, Newman 1987, Newman and Wear 1993). While these studies estimate elasticities at a broad regional level, there is little information on price or inventory elasticities at the state, ecological habitat, or other sub-regional level.

Each market was assumed to start in equilibrium. Since starting harvest Q_{it}, price P_t, inventory I_{it}, and elasticities (α, β, γ) were known, the equation was solved for initial location parameters (V_{it}, Z_t). The model does not explicitly model product flows between subregions. It assumes that current harvest by subregion

and interregional flows reflect an equilibrium response to transportation costs and other factors not explicitly modeled. Changes in stumpage price due to modeled demand or supply shifts lead to marginal shifts in harvest that reflect the equilibrium effect of harvest consumed locally and in other subregions.

Model Linkage

The solution sequence for each scenario proceeded as follows. First a market was defined by choosing which state/habitat combinations were able to respond to a given demand scenario. For example, in the *Reference Case* all regions and ecological habitats were considered potential suppliers. When individual states were considered markets, a separate demand curve was posited for each state and only within-state habitat types were considered suppliers (scenario 5, Table 1). The various scenarios were designed to investigate the impact of different levels of market integration as well as sensitivity to demand or land-use trends.

Figure 3 shows a simplified example of how equilibrium was estimated through time. Given starting values, initial demand and supply curve locations were estimated at the beginning of the period (Figure 3a). In the *Reference Case*, the demand curve was shifted outward 1% in yr 1 (D_1, Figure 3b). Given initial harvest, the change in inventory was estimated in ATLAS, which SRTS used to shift supply proportionately (S_1, Figure 3b). In this example, supply was assumed to decrease by 2% in response to a decline in inventory. This resulted in a relatively large increase in price (from P_0 to P_1) and a small relative decrease in harvest (from H_0 to H_1, Figure 3b). In the integrated model, ATLAS inventories would shift the supply curves of all supply units, and a market clearing price would be found using a binary search algorithm.

Results

Economic theory suggests that quantity demanded (harvested) should increase in harvest units with a price advantage. In this modeling framework, increases in inventory (excess of growth to drain) would, other things being equal, lead to lower prices and increased harvest relative to harvest units with an inventory shortfall (drain exceeds growth). The scenarios outlined in Table 1 were designed to examine the effects of changing assumptions about wood demand, wood supply markets, and timberland area on timber inventory and price over a 50 yr projection period. In essence, we have manipulated some aspect of the market for wood, either on the demand side or supply side, to see likely effects on timber inventory and price given the model assumptions. Results are presented in a series of figures and tables.

Reference Case (1% yr^{-1} Demand Increase, Regional Market)

The 50 yr projection for the *Reference Case*, the scenario that we felt was most likely, indicates a gradual increase in timber inventory and harvest over the period (Figure 4). ATLAS output provided a breakdown by hardwood and softwood species groups and is shown for the *Reference Case* in Table 3. Data for the other scenarios are not shown because the differences among them were not great enough to justify the addition of a large number of tables. Both hardwood and softwood inventory and harvest increased over the period (Table 3). Initial inventory on all timberland was 66.7 billion ft^3 (62% was hardwood and 38% softwood). By 2050, inventory volume increased 13% to 75.4 billion ft^3 with almost no change in proportion of volume in hardwoods and softwoods. Net growth declined over the 50 yr period from 35.3 to 32.1 ft^3 ac^{-1} yr^{-1}, while harvest increased from 26.6 (57.0% hardwood) to 31.9 ft^3 ac^{-1} yr^{-1} (56.0% hardwood) (Table 3). Growth declined from 1.33 times removals to just slightly greater than 1 times removals. Regional price increased 73% over the period or approximately 1.1% yr^{-1} (Figure 5).

Within our modeling framework, harvest units with inventory increases should lead to lower prices and increased harvest relative to harvest units with decreased inventory. Over the projection period, aggregate regional harvest in the *Reference Case* shifted from states with a relative inventory deficit, like New Hampshire, to states with a relative inventory surplus, like New York. Regionally, harvest increased 21% over the period, but increased 50% in New York and only 6% in New Hampshire (Table 4). The principle also applies to harvest units where harvest shifted from habitat types with a relative inventory deficit, like oak/white pine, to types with a relative inventory surplus, like sugar maple/ash (Table 5).

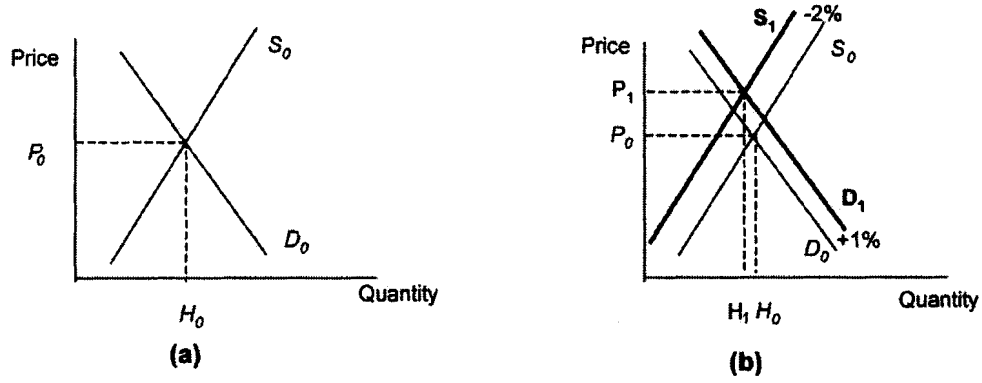

Figure 3. (a) Model starting point with price P_0 and harvest H_0 at intersection of demand curve D_0 and supply curve S_0. (b) Yr 1 model adjustment to price P_1 and harvest H_1 assuming a 1% increase in demand to D_1 and a 2% decrease in supply to S_1.

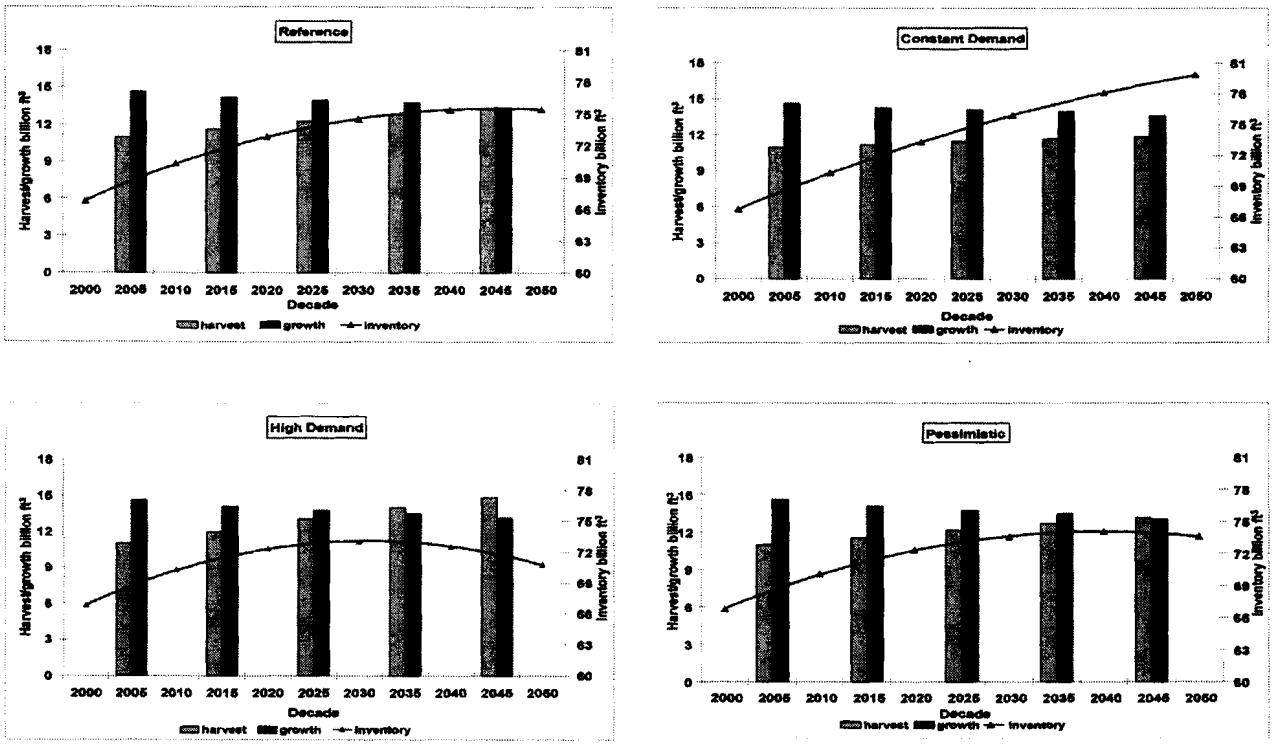

Figure 4. Inventory, harvest, and growth (billion ft³) on timberland in the NEFA states over the 50 yr projection period for the following scenarios: Reference, Constant Demand, High Demand, and Pessimistic Land-Use Change. Inventory plotted at beginning of decade, harvest, and growth per decade plotted at mid-decade.

Table 3. Inventory, harvest, and growth by species group and timberland area by decade for the 50 yr projection period for the NEFA states for the *Reference Case* scenario. Inventory and land area recorded at beginning of decade, harvest and growth data are decadal values.

	Beginning of decade			Decade total			
Decade	Hardwood inventory	Softwood inventory	Timberland area (million ac)	Hardwood harvest	Softwood harvest	Hardwood growth	Softwood growth
	(billion ft³)			(billion ft³)			
2000	41.520	25.262	41.347	6.257	4.720	9.038	5.560
2010	43.792	26.526	41.507	6.668	4.914	8.767	5.403
2020	45.359	27.477	41.607	6.963	5.265	8.452	5.481
2030	46.375	28.124	41.698	7.223	5.588	8.238	5.501
2040	46.946	28.448	41.769	7.460	5.867	8.073	5.323
2050	47.203	28.237	41.827				

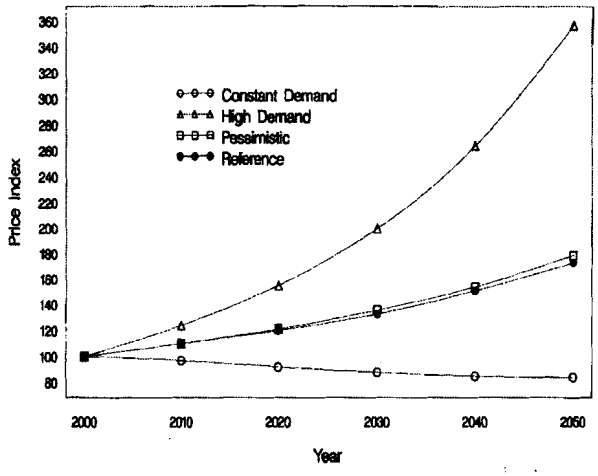

Figure 5. Stumpage price change over time for Reference, Constant Demand, High Demand, and Pessimistic Land-Use Change scenarios.

Although softwood plantations account for a small proportion of the total timberland area they almost doubled in harvested volume over the projection period (Table 5).

Constant Demand (No Demand Increase, Regional Market)

The *Constant Demand* scenario resulted in a greater increase in inventory over the period compared to the *Reference Case* (Figure 4). By 2050, inventory volume increased 20% to 79.8 billion ft³ with almost no change in proportion of volume in hardwood and softwood. Net growth declined over the 50 yr period from 35.3 to 32.5 ft³ ac⁻¹ yr⁻¹, while harvest increased from 26.6 (57.0% hardwood) to 28.4 ft³ ac⁻¹ yr⁻¹ (55.6% hardwood). Growth declined from 1.33 times removals to 1.15 times removals. Regional price decreased 16% over the period or approximately 0.3% yr⁻¹ (Figure 5).

High Demand (2% yr⁻¹ Demand Increase, Regional Market)

The *High Demand* scenario resulted in less of an increase in inventory over the period compared to the *Reference Case*

Table 4. Change in total harvest volume per decade by state and region from decade beginning 2000 to decade beginning 2040 for the *Reference Case* scenario.

Decade	State				
	Maine	New Hampshire	New York	Vermont	Region
	(million ft^3)				
2000–2009	5,573	1,525	2,723	1,156	10,977
2040–2049	6,213	1,609	4,096	1,409	13,327
Percent change	12	6	50	22	21

Table 5. Change in total harvest volume per decade by habitat type and region from decade beginning 2000 to decade beginning 2040 for the *Reference Case* scenario.

Decade	Habitat type							
	Sugar maple/ash	Spruce/ fir	Beech/ red maple	Hemlock/ red spruce	Oak/ white pine	Plantation	Other*	Region
	(million ft^3)							
2000–2009	2,683	2,503	1,708	1,264	1,432	476	911	10,977
2040–2049	3,337	3,087	2,175	1,386	1,485	907	950	13,327
Percent change	30	23	27	10	4	93	4	21

* Other types include Allegheny hardwoods, oak/hickory, cedar/black spruce, and deer wintering area, which aggregated account for 8 % of the regional harvest volume.

(Figure 4). By 2050, the ending inventory volume had increased only 6% to 70.8 billion ft^3 with a small change in proportion of volume in hardwood (63%) and softwood (37%) (Figure 4). Net growth declined over the 50 yr period from 35.3 to 31.4 ft^3 ac^{-1} yr^{-1}, while harvest increased from 26.6 (57.0% hardwood) to 35.5 ft^3 ac^{-1} yr^{-1} (56.4% hardwood). Growth declined from 1.33 times removals to 0.88 times removals. Inventory declined in absolute terms for both hardwood and softwood by the decade beginning 2040. Softwood harvest level surpassed growth in the decade of 2020 and hardwood harvest in the decade of 2040. Regional price increased 257% over the period or approximately 2.6% yr^{-1} (Figure 5).

Pessimistic Land-Use Change (1% yr^{-1} Demand Increase, Regional Market, Increased Timberland Loss)

The *Pessimistic Land-Use Change* scenario resulted in less of an increase in inventory over the period compared to the *Reference Case* (Figure 4). By 2050, inventory volume increased 10% to 73.6 billion ft^3 with a small change in proportion of volume in hardwood (63%) and softwood (37%). Net growth declined over the 50 yr period from 35.3 to 32.2 ft^3 ac^{-1} yr^{-1}, while harvest increased from 26.6 (57.0% hardwood) to 32.5 ft^3 ac^{-1} yr^{-1} (55.9% hardwood). Growth declined from 1.33 times removals to just slightly greater than 1 times removals. Softwood harvest level surpassed growth in the decade beginning 2040 but hardwood harvest remained less than hardwood growth for the entire period. Regional price increased 79% over the period or approximately 1.2% yr^{-1} (Figure 5).

New Hampshire Pessimistic Land-Use Change (1% yr^{-1} Demand Increase, State Market, Increased Timberland Loss)

In the *Pessimistic Land-Use Change* scenario most of the regional loss in timberland was attributed to New Hampshire, a loss of almost a quarter of its timberland over 50 yr. In this scenario New Hampshire's timber demand was satisfied by harvest from within state. Initial inventory in New Hampshire was 9.5 billion ft^3, 59% of volume was in hardwoods and 41% in softwoods (Figure 6). By 2050, inventory volume decreased 25% to 7.1 billion ft^3 with a small change in proportion of volume in hardwood (58%) and softwood (42%). Net growth declined over the 50 yr period from 36.1 to 31.6 ft^3 ac^{-1} yr^{-1}, while harvest increased from 33.8 (58.0% hardwood) to 45.0 ft^3 ac^{-1} yr^{-1} (56.5% hardwood). Growth declined from 1.07 times removals to just 0.71 times removals. New Hampshire price increased 173% over the period or approximately 2.0% yr^{-1}.

Discussion

The objective of the study was to use the NEFA computer simulation framework with the integrated market module to explore further the effects on the forest resource in terms of timber harvest, inventory, and price under various assumptions about demand, land-use change, and markets. The *Reference Case* proposed estimates of change in demand and land-use change based on continuation of recent trends and assumed that the four-state region was the market. Wood fiber substituted freely and was free to move from harvest units with surplus

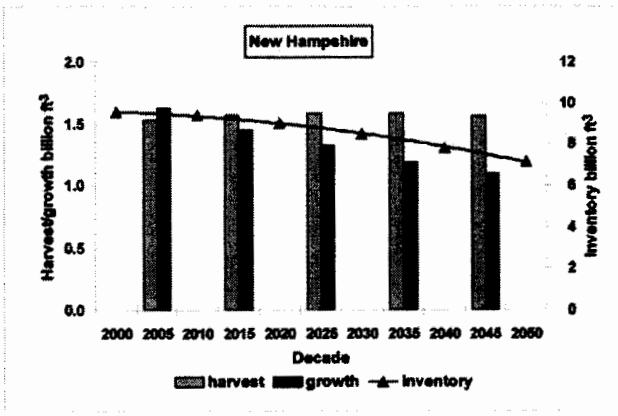

Figure 6. Inventory, harvest, and growth (billion ft^3) on timberland in New Hampshire for the New Hampshire Pessimistic Land-Use scenario. Inventory plotted at beginning of decade, harvest, and growth per decade plotted at mid-decade.

inventory to compensate harvest units with deficits. Assumptions were made more restrictive incrementally to examine the effects on inventory, harvest, and price. These restrictions included constant demand, greater increase in demand, greater loss of timberland area, and markets confined to be individual states.

The reference case in the report, "A Forest Resource Model of the States of New York, Vermont, New Hampshire, and Maine" (Turner and Caldwell 2001) was almost identical to our *Constant Demand* scenario with one exception. They assumed that harvest would remain at the current level for the entire 50 yr projection period and by 2050 inventory increased by 24% to 82.5 billion ft^3. By making harvest exogenous, the market model found the price and demand level consistent with the harvest assumption and allowed a shift in harvest across states and habitat types based on the estimated supply response. By assuming exogenous harvest Turner and Caldwell maintained a parallel with the Maine study (Gadzik et al. 1998) where only ATLAS was used and constant harvest level was assumed. But unlike the Maine study, the market model reallocated harvest across states and habitat types in response to supply.

In our *Constant Demand* scenario we assumed that *demand* remained constant and by 2050, inventory volume increased by only 20% to 79.8 billion ft^3. Harvest rate became endogenous and by making assumptions about demand trends, the model found both price and harvest quantity, and timber supply became dynamic. In the model, increased inventory moved the supply curve out, lowering price, and calling for greater harvest volume. ATLAS alone as used in the Maine study ignores the demand side of the market and therefore the equilibrating effect of price. In the *Constant Demand* scenario regional price decreased 16% over the period or decreased approximately 0.3% yr^{-1} (Figure 5).

The effects of changing assumptions in scenarios 2 through 4 are summarized in Table 6 where relative change in price, harvest, and inventory are examined at the end of the 50 yr projection period, both in terms of resulting values for individual scenario runs and relative to the *Reference Case* (scenario 1). The magnitude of the change in price, harvest, and inventory (initial year was always 100) measured the effect of changing the assumptions in each scenario. The index measured the change relative to the *Reference Case*. For example, the price index for the *Constant Demand* scenario relative to the *Reference Case* was 49 (84/173).

The price effect (Table 6) was greatest when demand assumptions were manipulated. The *Reference Case* assumed demand increased at the rate of 1% yr^{-1}, *Constant Demand* assumed no change, and *High Demand* assumed demand increased at the rate of 2% yr^{-1}. Price decreased under *Constant Demand* and was about half the price of the *Reference Case*, while price increased under *High Demand* and was about 2 times the *Reference Case* price. On an annual basis, *Reference Case* price increased at the rate of 1.1% yr^{-1} and *High Demand* at 2.6% yr^{-1}, both rates of increase were near or within the recent historical record of real price increase for Maine and Vermont. Harvests are expected to climb in the Northern states and particularly in the Northeast over the next 50 yr because of large and expanding hardwood inventories and high proportion of nonindustrial private forest ownership (USDA, Forest Service 2002).

Price change for the *Pessimistic Land-Use Change* scenario was only slightly greater, by 3%, than the *Reference Case* despite the net loss of nearly 1 million acres of timberland (2.2%) in the region (Table 6). Although the losses associated with the *Pessimistic* scenario are not anticipated, a booming economy in southern New England, as we saw in the 1980s, could make them more likely. The fact that we assumed a regional market in this scenario dampened the effect of net loss in timberland area, allowing habitat types and states with surplus timber to compensate for those with deficits. Loss of forest area is a problem that the region must address if current rates of harvesting are to be increased (Irland 1999, Field 1997). Whether forestland continues to be nibbled away by near-urban development and sprawl as assumed here or large tracts of land are reserved from timber production through such action as the proposed 3.2 million ac Maine Woods National Park, effects will be felt far beyond the immediate area.

In the *Pessimistic Land-Use Change* scenario most of the regional loss in timberland was attributed to New Hampshire, a loss of almost a quarter of its timberland over 50 yr (Table 2). A separate scenario was run including only New Hampshire and assuming that demand for New Hampshire timber was satisfied by harvest within state (*New Hampshire Pessimistic Land-Use Change*). Although not reported here, a scenario was run consisting of *Independent State Markets*, where all states were confined to be markets for their own timber, but where timberland loss was the same as in the *Reference Case*. New Hampshire price increased 173% and was 24% greater than when timberland loss was the same as in the *Reference Case*, and New Hampshire timber demand was satisfied by harvest within state. When New Hampshire was considered part of the regional market, the region was able to absorb the loss of significant area of timberland. The model allowed wood to flow from surplus areas to compensate for deficit areas, and gain in timberland in New York offset some of the loss in New Hampshire. Scenario 5 forced New Hampshire markets to absorb the large loss of its timberland area and resulted in a large increase in price

Table 6. Integrated SRTS-ATLAS scenarios 1 to 4 summarized by relative change in price, harvest, and inventory (initial year = 100) at the end of the 50 yr projection period also expressed as an index of the *Reference Case*, ranked by index.

Scenario	Price	Index	Scenario	Harvest	Index	Scenario	Inventory	Index
2 Constant demand	84	49	2 Constant demand	109	87	3 High demand	106	94
1 Reference	*173*	*100*	4 Pessimistic	123	98	4 Pessimistic	110	97
4 Pessimistic	179	103	*1 Reference*	*125*	*100*	*1 Reference*	*113*	*100*
3 High demand	357	206	3 High demand	143	114	2 Constant demand	120	106

in New Hampshire. We know that the assumption of an independent state market is somewhat artificial, but it emphasizes that the wood economy is regional. Issues affecting the forest resource in one state cross the border into the surrounding region and have an affect there.

In all scenarios where a regional market was assumed (scenarios 1 through 4, Table 1), growth declined over the projection period on average approximately 9%. The senescence of mature and over-mature hardwood forests contributed to this effect. Although growth measured in cubic feet declines, the maturing forest increases in board foot volume and timber grade and, therefore, value.

The results for harvest and inventory were consistent with the results for price. For example, in the *Constant Demand* scenario, price decreased and the index was 49 relative to the *Reference Case* (Table 6). The small increase in harvest was less than that in the *Reference Case* and the increase in inventory was greater. Unchanging demand resulted in an increased inventory that led to decreased price and increased harvest.

Because there has been so little empirical work in the area of econometrics on the timber industry of the Northeast, we relied on what limited evidence was available for the Northeast, results from other regions of the United States, and economic theory. The *Reference Case* scenario resulted in harvest and price trends that were consistent with recent historical trends in Maine and Vermont. Assuming one large regional market for wood was an obvious oversimplification. There is substantial trade with states and Canadian provinces adjacent to the NEFA region. But we do know that wood is transported over great distances within the region. There are many examples of species substitution (Irland et al. 2001), and over the long projection period, processing facilities could be built near areas of surplus timber supply. Although the NEFA region does not exist as an independent market, its roundwood consumption is roughly in balance with its roundwood harvest. In 1997, 96% of the roundwood harvest was consumed within the region (The Irland Group 1999). Most cross-border movement occurs among the NEFA states. Canada (predominantly Quebec), a net importer from the region, accounts for the largest share of wood trade with the NEFA states.

Conclusions

The major conclusions that we can draw from the study are:

- In all scenarios, including *High Demand*, regional inventory was greater in 2050 than in 2000.
- In the *Reference Case*, regional growth and removals were in balance in 2050.
- The regional forest economy has a greater diversity that makes it more resilient compared to any one state's.
- The *High Demand* scenario resulted in a growth to removals ratio 0.88 by 2050. The higher prices simulated under *High Demand* could encourage more intensive management which may ameliorate some of the simulated inventory decline.
- Change in the resource situation in one state affects the situation in the other states in the region as well. There is a mutual dependence in markets that policy makers need to recognize when considering policy changes.

A number of potential policy issues were examined in the Maine study (Gadzik et al. 1998) and the NEFA study (Turner and Caldwell 2001) that were not re-examined here. They include: spruce budworm infestation and improved timber yields in Gadzik et al. (1998), and hemlock woolly adelgid infestation and a no-clearcutting alternative in Turner and Caldwell (2001). The model could be applied to other policy issues in the region including additions to the Adirondack Preserve, establishment of a Maine Woods National Park, various forest practices initiatives to limit timber harvests, and improvements in utilization and efficiency in conversion. However, it was not our intent to predict future conditions but to gain some insight into how adding a market perspective affects timber supply projections for the NEFA states. The NEFA model integrated SRTS and ATLAS and was a major advance over previous age-based timber supply simulations (Turner and Caldwell 2001). Integration of SRTS and ATLAS in the NEFA modeling process added the interplay of market forces and improved upon the policy information available from the ATLAS model alone.

Thus, we present our results as a starting point to encourage future research in the economics of timber supply in the Northeast. Basic annual harvest data that includes cross-border wood flow is needed for New York and New Hampshire. Research is needed in the following areas: stumpage demand and supply elasticities at sub-regional or state levels and for industrial and non-industrial landowners; logging costs; effect of technology on production costs; species substitution in the market; the extent to which inputs into primary forest products are complementary or competitive; and the effect of trade in roundwood products on the region.

Literature Cited

Abt, R.C. 1989. A "top-down" approach to modeling state forest growth, removals, and inventory. For. Prod. J. 39(1):71–76.

Abt, R.C., F.W. Cubbage, and G. Pacheco. 2000. Forest resource assessment using the sub-regional Timber Supply Model (SRTS). For. Prod. J. 50(4):25–33.

Adams, D.M., and R.W. Haynes. 1996. The 1993 Timber Assessment Market Model: Structure, projections and policy simulations. USDA For. Serv. Gen. Tech. Rep. PNW-GTR-368. 58 p.

Brann, T.B., and D.S. Solomon. 2001. Inventory processor and forest growth and management model. Misc. Publ. 749. Maine Agric. and For. Exp. Sta. 86 p.

Field, D.B. 1997. The strategic economic importance of Maine's forestry sector in an era of intensifying competition for land. P. 183–198 *in* Proc. of joint meeting of the Can. and Northeastern for. economists. MacFarlane, D., and D. Dennis (comps.). Can. For. Serv.

Gadzik, C.J., J.H. Blanck, and L.E. Caldwell. 1998. Timber supply outlook for Maine: 1995–2045. Maine For. Serv. http://www.state.me.us/doc/mfs/pubs.htm.

IRLAND, L.C. 1999. The Northeast's changing forests. Harvard Univ. Press, Cambridge, MA. 401 p.

IRLAND, L.C., P.E. SENDAK, AND R.H. WIDMANN. 2001. Hardwood pulpwood stumpage price trends in the Northeast. USDA For. Serv. Gen. Tech. Rep. NE-286. 23 p.

MILLS, J.R., AND J.C. KINCAID. 1992. The Aggregate Timberland Assessment System—ATLAS: A comprehensive timber projection model. USDA For. Serv. Gen. Tech. Rep. PNW-GTR-263. 169 p.

NEWMAN, D.H. 1987. An economic analysis of the Southern softwood stumpage market: 1950–1980. For. Sci. 33:932–945.

NEWMAN, D.H., AND D.N. WEAR. 1993. Production economics of private forestry: A comparison of industrial and nonindustrial forest owners. Am. J. Agric. Econ. 75(3):674–684.

SEYMOUR, R.S., AND R.C. LEMIN, JR. 1991. Empirical yields of commercial tree species in Maine. Misc. Rep. 361. Maine Agric. and For. Exp. Sta. 112 p.

SOLOMON D.S., D.A. HERMAN, AND W.B. LEAK. 1995. FIBER 3.0: An ecological growth model for northeastern forest types. USDA For. Serv. Gen. Tech. Rep. NE-204. 24 p.

THE IRLAND GROUP. 1999. Wood flows in New York, Vermont, New Hampshire, and Maine. The Northeast State For. Assoc. http://nefa.conknet.com.

TURNER, R.J., AND L.E. CALDWELL. 2001. A forest resource model of the States of New York, Vermont, New Hampshire, and Maine. The Northeast State For. Assoc. http://nefa.conknet.com.

USDA FOREST SERVICE. 1989. RPA assessment of the forest and rangeland situation in the United States, 1989. FRR-26. USDA For. Serv. 72 p.

USDA FOREST SERVICE. 2002. An analysis of the timber situation in the United States: 1952–2050. A technical document supporting the 2000 USDA For. Serv. RPA assessment. Draft. www.fs.fed.us/pnw/sev/rpa/ RPA timber assessment home page.