United States Department of Agriculture

Using Radio Frequency Identification (RFID) for Monitoring Trees in the Forest: State-of-the-Technology Investigation

Forest Service

National Technology & Development Program

1419 1805
Inventory and Monitoring

April 2014

Using Radio Frequency Identification (RFID) for Monitoring Trees in the Forest: State-of-the-Technology Investigation

Rey Farve, Project Leader
Forest Service
National Technology & Development Center
Inventory and Monitoring Program

April 2014

The information contained in this publication has been developed for the guidance of employees of the Forest Service, U.S. Department of Agriculture, its contractors, and cooperating Federal and State agencies. The Forest Service assumes no responsibility for the interpretation or use of this information by other than its own employees. The use of trade, firm, or corporation names is for the information and convenience of the reader. Such use does not constitute an official evaluation, conclusion, recommendation, endorsement, or approval of any product or service to the exclusion of others that may be suitable.

The U.S. Department of Agriculture (USDA) prohibits discrimination in all its programs and activities on the basis of race, color, national origin, age, disability, and where applicable, sex, marital status, familial status, parental status, religion, sexual orientation, genetic information, political beliefs, reprisal, or because all or part of an individual's income is derived from any public assistance program. (Not all prohibited bases apply to all programs.) Persons with disabilities who require alternative means for communication of program information (Braille, large print, audiotape, etc.) should contact USDA's TARGET Center at (202) 720-2600 (voice and TDD). To file a complaint of discrimination, write USDA, Director, Office of Civil Rights, 1400 Independence Avenue, S.W., Washington, D.C. 20250-9410, or call (800) 795-3272 (voice) or (202) 720-6382 (TDD). USDA is an equal opportunity provider and employer.

TABLE OF CONTENTS

I. INTRODUCTION 1
A. Background and Need 1
1. FIA program 1
2. Need as identified by proposer 3

B. Objective of Investigation 4

C. Technology Not Considered in the Investigation 4
1. Barcode technology 4

II. RFID TECHNOLOGY 4
A. Passive Tag – Active Reader 5

B. Active Tag – Passive Reader 6

C. Semi-Passive Tag – Active Reader 7

D. Application/Usage of RFID Technology 8
1. General use of RFID 8
2. RFID technology use in forestry 8

III. INVESTIGATION 9
A. RFID Tags Investigated 9
1. Semi-passive tags 9
2. Passive tags 9

B. RFID Readers Investigated 11

IV. FIELD TESTING THE MAXIMUM READ RANGE OF RFID TAGS AND READERS 12
A. Indoor Test 12

B. Outdoor Test 13

V. CONCLUSIONS AND RECOMMENDATIONS 15

VI. LITERATURE CITED 17

APPENDIX 19

A. PHOTOS OF RFID TAGS TESTED 21

I. INTRODUCTION

For Fiscal Year 2013, Gretchen Nicholas (Pacific Northwest Research Station, Forest Inventory and Analysis (FIA) program manager) submitted a proposal to the National Technology and Development Program's Inventory and Monitoring Steering Committee to investigate the state-of-the-technology of radio frequency identification (RFID) for use in relocating and monitoring trees in the forest environment.

RFID technology involves a wireless, non-contact system that uses radio frequency electromagnetic fields to transfer data from a tag (attached to an object) for automatic identification and/or tracking. This technology has advanced rapidly over the past decade.

The proposal was a request for the National Technology and Development Program to investigate whether (or not) RFID technology has advanced such that it might be a practical, cost-effective tool for the inventorying and monitoring of trees on forest lands (especially for the FIA program).

A. Background and Need

1. FIA program

The Forest Service's Forest Inventory and Analysis (FIA) program provides the information needed to assess America's forests. The FIA program provides a continuous, nationwide forest census that projects how forests are likely to appear 10 to 50 years in the future. This enables the FIA program to evaluate whether current forest management practices are sustainable over the long term.

The nationwide forest census requires continuous, periodic collection of field data to generate reports on status and trends: in forest area and location; in the species, size, and health of trees; in total tree growth, mortality, and removals by harvest; in wood production and utilization rates by various products; and in forest land ownership.

The FIA program is managed within the Forest Service's Research and Development organization in cooperation with State and Private Forestry and National Forest Systems.

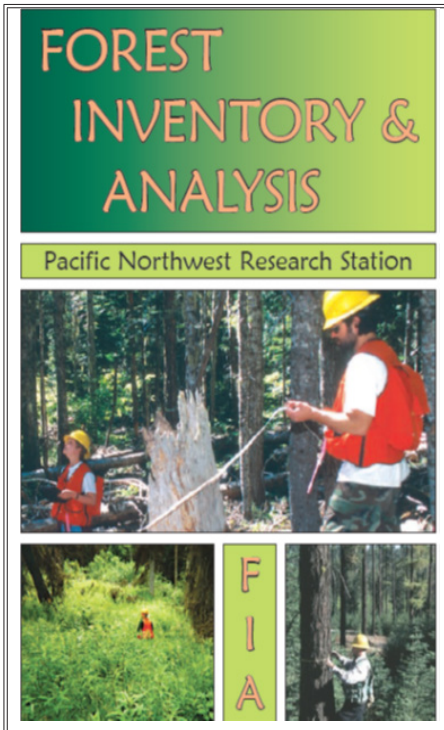

*Figure 1—FIA Program at PNW Research Station. See → http://*www.fs.fed.us/pnw/pubs/fia.pdf

Currently, for the national census, FIA monuments forest plots and trees with metal tags, which assist in relocating (revisiting) plots 10 years later for remeasurement. Frequently, after several years, trees have consumed the tags or tags are otherwise lost. Since RFID technology has advanced significantly over the past few years and is being used in wider applications, the proposer speculated that passive or semi-passive RFID technology (see RFID technology discussion in section II) may have advanced to a point that this technology might be a cost-effective tool to tag trees on a forest plot.

If trees on plots could be tagged with an inexpensive, durable, long-lived RFID tag that stores all (or most) of the tree's pertinent data (e.g., location, species, height, diameter, crown cover, health, etc…), a researcher with an RFID reader might easily relocate trees on plots 10 years later. Additionally, if the previous information about the tree could be retrieved easily and new (remeasurement) data uploaded easily, the time involved in the data capture process (i.e., collection of previous data and recording of new remeasurement data) on the revisited plots could be greatly reduced. This would reduce costs associated with data capture per plot.

As such, the National Technology and Development Program's Inventory and Monitoring Committee identified the scope of this investigation as:
"Investigate and demonstrate an electronic tracking method for locating trees and plot centers over time."

2. Need as identified by proposer

San Dimas staff contacted the proposer in March 2013 to determine the specific needs of the FIA program from RFID technology. Table 1 identifies parameters that would be considered ideally suitable for the FIA program and parameters that should be considered unsuitable (not acceptable). The parameters identified as acceptable are those that might be more suitable for other foresters in Research and Development or the National Forest System (that is, foresters within the agency that are not part of the FIA program).

Ideally, the proposer felt that the FIA program would benefit from RFID technology that allowed a surveyor to be able to revisit a FIA forest plot center and query the information on all RFID tags that were attached to trees in the plot area on the previous visit (10 years prior). The read range of the tags should be 20 feet (or greater) for the technology be a significant improvement over the current method of physically searching for metal tags attached to trees. Also, the GPS location information stored on the individual tree tags should enable trees to be more readily relocated.

Once revisited, the tree could be remeasured, and this updated information uploaded to the original tag (or the tag could be replaced, if necessary). Since several hundred trees are measured (and remeasured) in the FIA program, tags would have to be inexpensive and the tag-to-tree attachment must be simple and fast.

Table 1—Need/requirements of FIA of RFID technology for use in monitoring trees

	Performance Requirement		
Parameter	**IDEAL**	**ACCEPTABLE***	**NOT ACCEPTABLE**
Read range	> 20 ft.	5-10 ft.	< 3 ft.
Cost (per tag)	< $ 0.10	$ 0.15 - $ 0.45	> $ 0.50
Life span/ durability	12+ yrs.	8-9 yrs.	< 5 yrs.
Tag-to-tree attachment	Manual, simple, with lightweight tool	Intermediate	Needs heavy tool(s), complicated
Programmability	Fully and easily programmable in the field	In office – (with simple tree number)	---
Read accuracy	100%	---	< 99%
* Requirements that might be more acceptable to other foresters in R&D and/or NFS			

B. Objective of Investigation

The objective of this study is to investigate the current state of RFID technology – especially as it relates to practical, cost-effective use within the forest environment. The investigation focuses on needs that the FIA program considered as important for monitoring trees.

San Dimas staff enlisted the support of Don Limuti, electronics engineer, National Technology and Development Center, Missoula, MT. in the investigation.

C. Technology Not Considered in the Investigation

1. Barcode technology

Based on the needs identified by the proposer, barcode technology is not considered acceptable (or practicable) for FIA use on forest plots for the following reasons:

- Barcodes must be in the reader's line-of-sight (i.e., not obscured by other obstacles/vegetation).
- Readers must be (at most) within a few feet of the barcode.

II. RFID TECHNOLOGY

Unless otherwise cited, most of the information in this section was obtained from:

- en.wikipedia.org/wiki/RFID.
- rfid.net/basics.
- calpoly.edu/tutorial.htm.
- Karygiannis et al. 2007.

RFID technology involves a wireless, non-contact system that uses radio-frequency electromagnetic fields to transfer data from a tag (attached to an object) for automatic identification and/or tracking. A typical RFID system consists of an interrogator (also called a reader), and a transponder (commonly referred to as a tag) (figure 2). The tag is usually attached to an object that is to be identified.

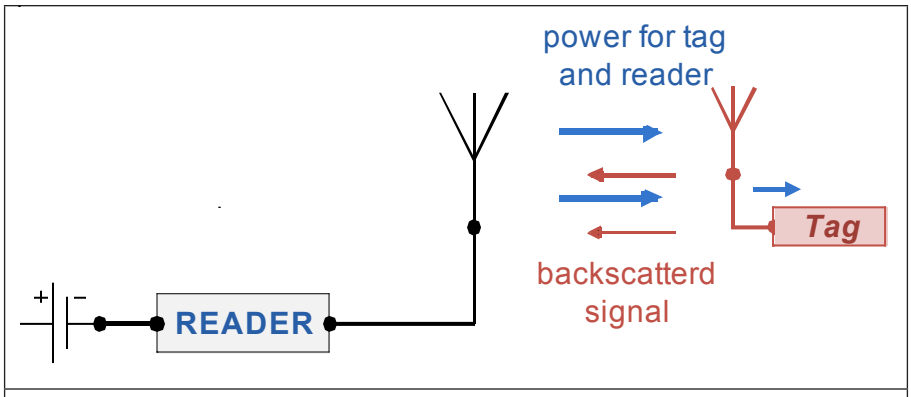

Figure 2—Typical RFID system consists of a reader and a tag. The reader sends radio waves to the tag that contains its identifying information. The tag responds to the reader with its information.

Radio transmissions are used by the reader to send a query to the tag and by the tag to return an answer, generally containing identifying information. The reader also can be connected to a host computer, where information can be incorporated into a database.

The three basic types of RFID systems are: (1) Passive Tags – Active Readers; (2) Active Tags – Passive Readers; and (3) an intermediate system of Semi-passive Tags – Active Readers.

The following discussion is the result of a brief literature search that staff conducted on RFID technology.

A. Passive Tag – Active Reader

Passive tags have no power of their own; instead, all the power needed to operate the tag is derived from the radio signals sent by the reader. Furthermore, passive tags have no conventional radio transmitter and, as such, cannot create their own signal. Instead, they vary the electrical load attached to the antenna in order to vary the signal reflected from the antenna, somewhat analogous to using a movable mirror to send a signal by reflecting the light of the sun towards a watcher. This technique is known as backscatter communications. Backscatter communications also require that the tag and reader be in close proximity (within a few feet) of each other when the transmitted radio waves are low frequency (LF) or high frequency (HF). With the emerging technology that transmit ultra-high frequency (UHF) radio waves, longer read ranges are becoming possible[1]; some UHF RFID manufacturers claim read ranges as long as 15 to 20 feet. Since metal and water (or moisture) tend to absorb UHF waves, consider their presence when evaluating UHF tags read ranges.

[1] For a discussion of the differences between HF and UHF RFID, see Intermec Technologies Corporation (2007).

Passive tags often are extremely simple devices (figure 3). The typical structure consists of a plastic substrate or inlay, a printed or etched metal antenna, and a single integrated circuit. As a consequence, passive tags can be much smaller and less expensive than other types of radio devices. A UHF passive tag with an antenna can be purchased in bulk for nickels per tag.

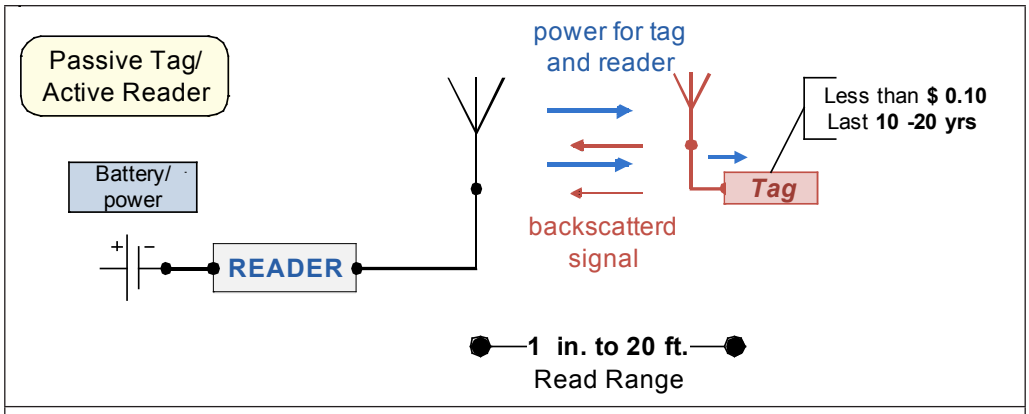

Figure 3—RFID system that consists of a passive (non-powered) tag and an active (powered) reader.

A passive tag requires no maintenance, and has a long lifetime, limited by degradation of the tag materials rather than battery usage. It is reasonable to expect that in many environments passive tags will be readable for 10 to 20 years.

B. Active Tag – Passive Reader

This RFID system is the opposite of the one described in section II.A. In the Active Tag – Passive Reader system, the tag is powered and the reader has no power (figure 4). In essence, an active RFID tag is equipped with its own radio transmitter, such as a cellphone or WiFi client.

Active tags use conventional circuitry for transmission and reception with read range and reliability similar to the performance of other radios. As such, read ranges of hundreds of meters to kilometers (miles) are achievable, and tags can be read despite substantial obstructions between the tag and reader.

With improved read range and reliability comes increased cost, size (circuit complexity), and maintenance requirements. Active tags cost more than $20 each; some cost as much as $100 each and are designed for tracking high-value assets.

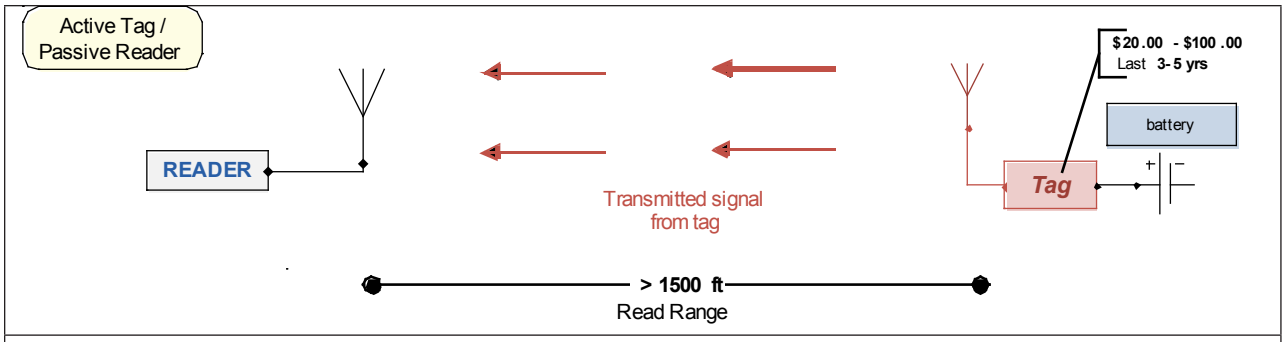

Figure 4—RFID system that consists of an active (powered) tag and a passive (non-powered) reader.

This technology is not practical (or cost-effective) for the needs identified in this investigation and will not be investigated/evaluated further. Readers interested in more details on Active Tag RFID technology should see the references/links provided at the beginning of this section.

C. Semi-Passive Tag – Active Reader

This RFID system is intermediate between the two systems discussed in sections II.A and II.B. In the Semi-Passive tag – Active Reader System, the reader is powered and the tag has a battery to power the tag's circuitry; the tag, however, still employs backscattering or load modulation to communicate with the reader (figure 5).

Semi-passive tags require that the reader signal be large enough to decipher but does not need to extract power to run the tag's circuitry. Therefore, the read range is not limited to a few feet (as with a passive tag). The read range of semi-passive tags usually is limited by the rapid decrease in the reader signal; however, high-quality receivers can achieve read ranges on the order of 300 feet in unobstructed areas.

In addition to longer range, semi-passive tags provide much better reliability at short ranges. A passive tag at several feet from a reader might not read the tag if the transmission path (of the radio waves) from tag to reader is blocked by an obstacle. A semi-passive tag at a similar distance is often better to decipher and reply to the reader's signal.

A downside of semi-passive tags is that they are more expensive than passive tags; furthermore, their applicability is limited by battery life. Manufacturers of semi-passive tags try to ensure that most of the circuitry is switched off except when the tag is being queried by a reader; battery life is still generally limited to only a few years.

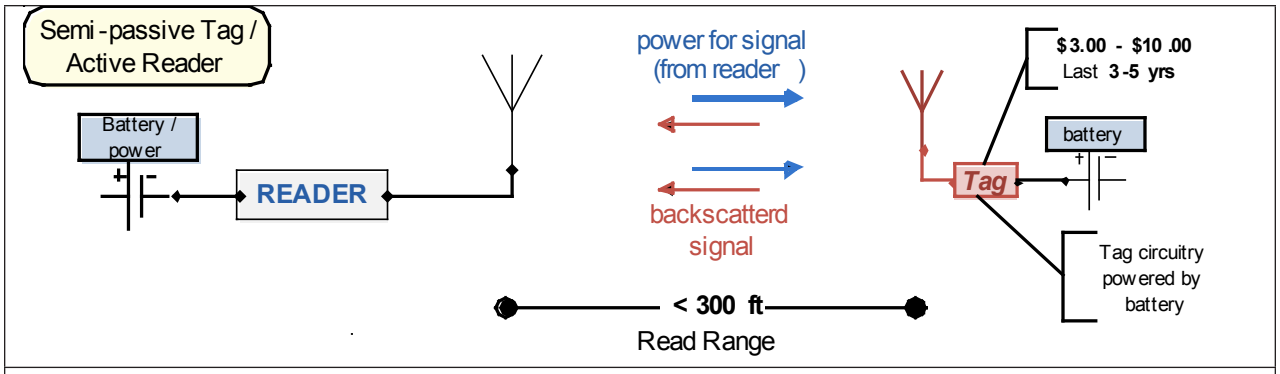

Figure 5—RFID system that consists of a semi-active (powered) tag and an active (powered) reader.

D. Application/Usage of RFID Technology

1. General use of RFID

RFID is used in numerous applications and it is projected to become more widespread in the future. For a general discussion of RFID history, usage, and cost see Roberts (2006) and Zhu et al. (2012).

Ferrer et al. (2010) provide a detailed discussion of how RFID can be used to enhance a wide variety of service delivery operations (e.g., freeway toll collection, library material tracking, hospital patient tracking, cargo tracking, retail cashless payment, and several others). They reported that most industries benefited by replacement of labor through automation, cycle time reductions, enabling self-service, and/or inventory control/loss prevention.

For a discussion of RFID use (and challenges to usage) in the agriculture industry see Ruis-Garcia and Lunaei (2011).

2. RFID technology use in forestry

According to our literature review, the suggested application of RFID for forestry is for tracking logs through the forestry supply chain and is reported by European foresters (Germany and Finland). Korten and Kaul (2008) were the first to report on the feasibility of using a passive RFID tag to track logs as they moved through the supply chain. However, the short read range of the HF tags used in the pilot study (6 inches to 1 foot) made reading tags a significant challenge.

Hakii et al. (2010) and Bjork et al. (2010) report on passive UHF RFID tags that were attached to the butt end of cut logs. The 6-foot read range of the UHF tag allowed logs to be tracked by a reader attached to the harvester and two readers located at the mill (in a log sorting area and a log sawing area) to document supply-chain performance.

Foresters from Asia (Malaysia and South Korea) have performed pilot studies using RFID tags attached to trees to test the feasibility of using the technology for monitoring trees. Mohamed et al. (2009)

conducted a proof-of-concept-like study that reported on the benefits and challenges of using RFID in a forest setting. Jung et al. (2009) attached various sized UHF RFID tags to trees and compared maximum read distance under different environmental conditions. Of the 15 different tags they tested, the maximum read distance was no more than 5 feet. Larger tags tended to perform better than smaller tags and damp weather tended to affect read range.

III. INVESTIGATION

Based on our review of RFID technology literature (section II), we felt that passive UHF tags might provide a reasonable solution to meet several of FIA's needs. We, therefore, decided to investigate several manufacturers of RFID technology that use UHF to gain additional information on the capabilities of passive tags and readers.

This was not a comprehensive, exhaustive investigation; it was a reasonable search of potential vendors to get a sense of what the current state-of-RFID-technology (using UHF) is relative to use for inventory and monitoring of trees in the forest environment. We contacted several RFID manufacturers to determine if they had a product that might meet the needs identified in section I.A.2, table 1.

Don Limuti, electronics engineer, National Technology and Development Center, Missoula, MT conducted the investigation.

A. RFID Tags Investigated

1. Semi-passive tags

During the course of the investigation, we were able to confirm our original understanding of the benefits and shortcomings of semi-passive tags (section II.C). Semi-passive tags have much longer read ranges than passive tags, but the current cost and short life span of semi-passive tags make them unacceptable as a tool for the FIA program and most likely make them impractical (or not cost effective) for other potential users within the National Forest System. We did not investigate semi-passive tags further.

2. Passive tags

Since we suspected that passive tags might provide a reasonable solution to meet the identified needs, the investigation focused on this technology. Early in the investigation, it became obvious that only tags that utilized UHF radio waves to transmit data would be capable of providing read ranges close to the distances of interest (i.e., > 20 feet). As such, the investigation focused only on passive UHF tags.

We contacted eight RFID manufacturers (see table 2) during May – September 2013 to inquire about their RFID tags, especially their ability to meet our identified needs (table 1)[2]. By September 2013, we had acquired sample tags for testing from all manufacturers. The passive tags provided by the manufacturers came in many shapes and sizes. Since we were primarily interested in the read range of the tags, we were not particularly concerned with the form factor (i.e., packaging, physical shape, or size) of the tag. (See appendix A for photos of several of the tags tested.)

In the course of the investigation, we periodically asked the manufacturers about cost. We never requested a formal quote from the manufacturers, but our general sense was that $0.45/tag (or greater) for an order of 100,000+ was probably most manufacturers negotiating starting point.

Table 2. RFID manufactures that were contacted for the investigation and the number of tags they provided for testing

RFID Manufacturer	Web site	Point of Contact	# of Tags Provided
SAG	www.sag.com.tw	Daniel Yeh danielyeh@sag.com.tw	4
ZEBRA	www.zebra.com	Stuart_Garney@Identisys.com www.identisys.com	3
THINKIFY	www.thinkifyit.com	Melissa Beagle, melissa@thinkifyit.com	6
CONFIDEX	www.confidex.com	Eric Heineman eric.heineman@confidex.com	2
FRICK	www.fricknet.com	Brent Howell Brent.Howell@fricknet.com	6
VIZINEX RFID	www.vizinexrfid.com	Robert Oberle roberle@vizinexrfid.com	2
HID Global Corp.	www.hidglobal.com	David Chose Dchose@hidglobal.com	3
uGROKit	www.ugrokit.com	Laura Sankey Laura@UGrokit.com	9
		Total	35

On 5-6 November 2013, we tested the tags at the National Technology & Development Center, Missoula, MT (see discussion in section IV).

[2] We considered FIAs identified need for long read ranges and low cost/tag as the more crucial needs. We felt if those needs could not be satisfied, FIA would not be interested in whether (or not) RFID technology met the other identified needs.

B. RFID Readers Investigated

To be a practical field tool, we felt that a RFID reader should be lightweight, rugged, and waterproof. The RFID reader also should allow for wireless connectivity to a laptop and have about 0.5 watts of transmission (output) power to provide for a long read range.

During the course of the investigation, we identified two RFID readers that met most of those parameters: Thinkify UHF Reader and the uGROKit Reader. The manufacturers of these RFID readers loaned us the devices to use in testing the passive tags.

The Thinkify RFID reader is attached to (integrated with) an ATid – AT-570 mobile computer (figure 6). The reader has 0.8 watts of transmission power. The uGROKit Reader system uses a smartphone (iOS or Android) attached to a RFID reader (called a Grokker) that operates with 0.4 watts of transmission power (figure 7).

Figure 6—Thinkify RFID reader (attached to ATiD, AT-570 mobile computer). Top = top view; Bottom = front view

Figure 7—uGROKit RFID reader (Grokker) attached to mobile phone.

IV. FIELD TESTING THE MAXIMUM READ RANGE OF RFID TAGS AND READERS

We tested the read range of the RFID tags and readers at Missoula, MT, on 5–6 November 2013. On 5 November in a conference room at the Missoula Center we tested all RFID tags for their maximum read range. Since we considered a read range of 15 feet to be at the lower end of the FIAs need, we felt that any tags that consistently had, at least, that read range would be tested outdoors too.

A. Indoor Test

We tested the tags by attaching the RFID tags (of a given manufacturer) to the conference room wall (using masking tape) and used the Thinkify and uGROKit RFID readers to determine the maximum read range (figure 8). We started the test by reading the tags with one reader at a distance of 2 feet. (Note: The reader was rotated in all directions to obtain a tag reading.) From 2 feet we backed away from the wall (tag) at 3-foot increments until we were at the other end of the room (27 feet). Then we tested the same tags with the other RFID reader. We then repeated the process with another manufacturer's tags.

Figure 8—Indoor testing of maximum read range of uGROKit tags.

The results of the maximum read range test are shown in table 3.

Table 3—Indoor read ranges of 35 passive RFID tags tested in the study

Manufacturer	Tag ID No.	Reader	Read Range (ft.) 2	6	9	12	15	18	21	24	27
SAG	7010A1	Thinkify	X								
		uGROKit	X								
	406BE1	Thinkify	X								
		uGROKit	X								
	90C485	Thinkify	X								
		uGROKit	X								
	00D8A8	Thinkify	X	X	X	X	X				
		uGROKit	X	X	X	X	X	X	X	X	
ZEBRA	221605	Thinkify	X	X	X	X		X		X	
		uGROKit	X	X	X	X	X	X	X		X
	221611	Thinkify	X	X	X		X				
		uGROKit	X	X	X	X	X	X	X	X	X
	22160C	Thinkify	X	X	X	X				X	
		uGROKit	X	X	X	X	X	X	X	X	X
THINKIFY	204B61	Thinkify	X	X	X	X	X				
		uGROKit	X	X	X	X	X	X	X	X	X
	404F78	Thinkify	X	X	X	X					
		uGROKit	X	X	X	X	X	X	X		
	700C30	Thinkify									
		uGROKit	X								
	10E1FC	Thinkify	X	X							
		uGROKit	X	X	X	X	X		X	X	
	00BA02	Thinkify	X								
		uGROKit	X								
	880468	Thinkify	X								
		uGROKit	X								
CONFIDEX	100360	Thinkify	X								
		uGROKit	X								
	00013C	Thinkify	X								
		uGROKit	X								

Manufacturer	Tag ID No.	Reader	Read Range (ft.) 2	6	9	12	15	18	21	24	27
FRICK	257672	Thinkify									
		uGROKit	X								
	0000E8	Thinkify									
		uGROKit									
	300030	Thinkify	X	X	X				X		
		uGROKit	X	X	X	X	X	X		X	X
	254744	Thinkify	X								
		uGROKit	X	X							
	00B1D8	Thinkify	X	X	X	X	X	X		X	X
		uGROKit	X	X	X	X	X	X	X	X	X
	3000E2	Thinkify	X	X		X			X	X	
		uGROKit	X	X	X	X	X		X		
VIZINEX	90E785	Thinkify	X	X	X	X	X	X			X
		uGROKit	X	X	X	X	X	X	X	X	X
	165DF6	Thinkify	X	X							
		uGROKit									
HID	2014E0	Thinkify	X	X	X						
		uGROKit	X	X	X	X					
	E20068	Thinkify	X								
		uGROKit	X								
	00A2CA	Thinkify	X	X							
		uGROKit	X	X							
uGROKit	2	Thinkify					X		X		
		uGROKit	X	X	X	X	X	X	X		X
	6	Thinkify	X	X	X	X		X	X		
		uGROKit	X	X	X	X		X	X	X	X
	9	Thinkify									
		uGROKit	X	X	X	X	X	X			X
	12	Thinkify	X			X	X	X			
		uGROKit	X	X	X	X	X	X	X		X
	16	Thinkify	X		X	X	X		X	X	
		uGROKit	X	X	X	X	X	X	X	X	X
	21	Thinkify						X			
		uGROKit	X	X	X	X	X		X	X	X
	22	Thinkify	X		X	X	X			X	X
		uGROKit	X	X	X	X	X	X		X	X
	24	Thinkify				X					
		uGROKit	X	X	X	X	X	X	X	X	
	26	Thinkify	X	X			X				
		uGROKit	X	X	X	X			X		

XX Tag chosen for outdoor testing

The read range of the tags was 2 feet to 27 feet (i.e., the length of the room). The Grokker (i.e., the uGROKit reader) consistently read further than the Thinkify reader.

From this indoor test, we selected 12 tags (shaded in green in table 3) for outdoor testing. In general, these 12 tags consistently had a read range of 15 feet (or more) from both readers.

B. Outdoor Test

We conducted the outdoor test of the 12 selected tags individually in the front parking area of the Missoula Center. We attached each tag to a cottonwood tree (11inches in diameter). As with the indoor test, we started the test by reading the tag with one reader at a distance of 2 feet, facing the direction

of the tag (figure 9). (Note: As in the indoor test, the reader was rotated in all directions to obtain a tag reading.) From 2 feet we backed away from the tree (tag) at 3-foot increments (but always directly facing the tag) until we could no longer read the tag. The same tag was tested with the other RFID reader.

Figure 9—Testing read range of RFID tags outdoors. Top - RFID tag taped to cottonwood tree. Bottom - Reading a RFID tag several feet from tree.

The results of the maximum read range test are shown in figure 10. None of the tags read farther than 15 feet. Four of the 12 tags had read ranges of 12 to 15 feet. The manufacturers of the four tags were: Vizinex (# 90E785); Zebra (# 221605); and Thinkify (# 204B61 and # 10E1FC).

We also tested reading the tags at 45 degrees and 90 degrees within 6 feet of the tree, but received inconsistent readings. As such, we decided not to systematically test reading tags in this manner.

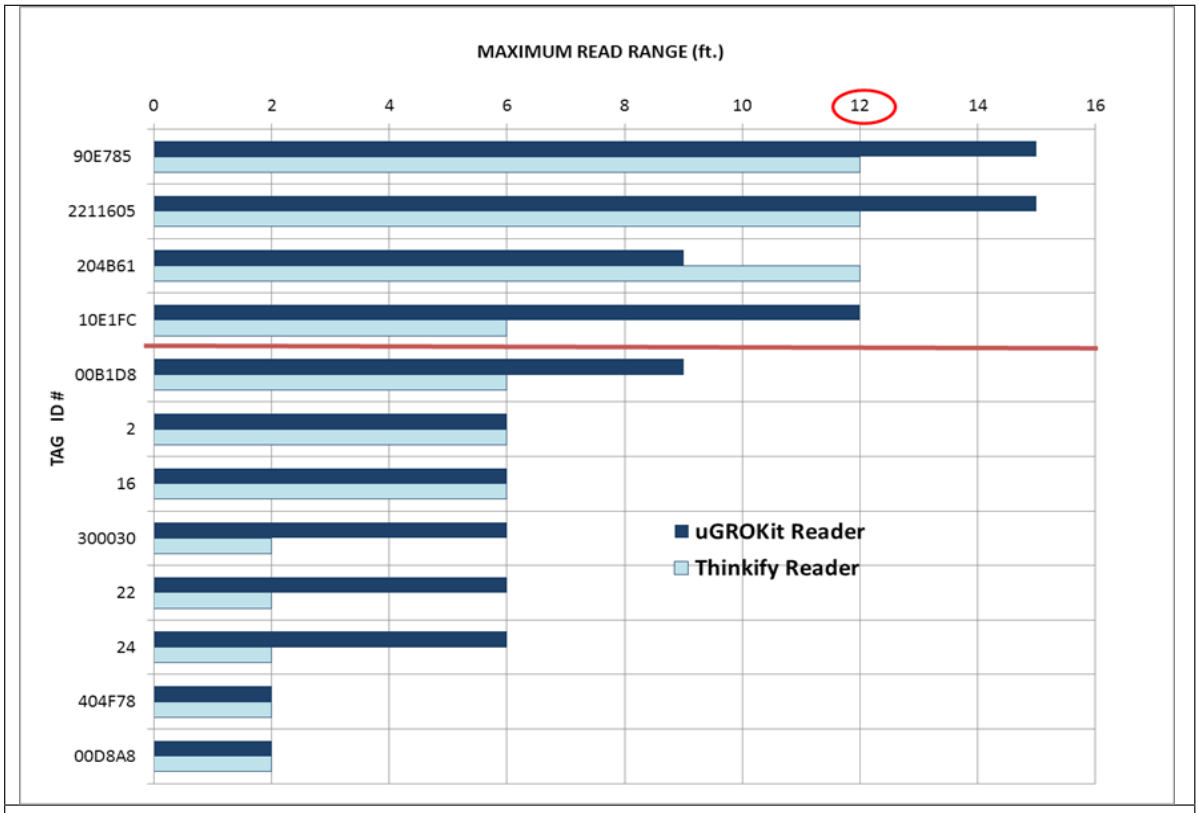

Figure 10—Outdoor read ranges of the 12 passive RFID tags tested in the study – using the uGROKit and Thinkify RFID Readers. The four tags above the red line had maximum read ranges of 12 to 15 feet.

V. CONCLUSIONS AND RECOMMENDATIONS

As stated in section I.B, the objective of this study was to investigate the current state of RFID Technology – especially as it relates to practical, cost-effective use within the forest environment.

We determined that the current state of RFID technology does not meet the most crucial needs (i.e., low cost and long read range) identified by the proposer. None of the RFID tags that we tested outdoors had a maximum read range of more than 15 feet. Also, manufacturers indicate that the likely cost/tag would be $0.45/ tag (or greater) for 100,000+ tags.

If the cost of passive UHF RFID tags continues to decline and the read range improves, this technology may become an increasingly attractive option for inventorying and monitoring assets outdoors.

We did determine that some manufacturers have RFID tags that provide fairly long outdoor read ranges (15 feet). Some manufacturers (Vizinex in particular) told us that they were working actively on improving the read range of their passive UHF tags. Also, more expensive RFID readers (with more output power) might increase outdoor read ranges. As such, a more focused collaboration with a Forest Service sponsor (e.g., FIA) and a specific manufacturer (or a few manufacturers) might lead to the development of an inexpensive tag with a longer read range and a suitable form factor.

VI. LITERATURE CITED

Bjork, A.; Erlandsson, M.; Hakli, J.; Jaakkola, K.; Nilsson, A.; Nummila, K.; Puntanen, V,; Sirkka, A. 2010. Monitoring environmental performance of the forestry supply chain using RFID. Commuters in Industry. 62: 830-841.

Ferrer, G.; Dew, N.; Apte, U. 2010. When is RFID right for your service. Int. Jour. Prod. Economics. 124:414-425.

Ha¨ kli, J.; Jaakkola, K.; Pursula, P.; Huusko, M.; Nummila, K. 2010. UHF RFID based tracking of logs in the forest industry. In: Proceedings of the IEEE conference on RFID (IEEE RFID 2010), April (2010). 245–251.

Jung, T.-W.; Koo, J-H.; Kim, K-M,; Pyeon, M-W. 2009. Research on RFID system recognition test under the forestry environment for tree management. In: Fifth International Joint Conference on INC, IMS, and IDC, Seoul, (2009). 1180–1184.

Intermec Technologies Corporation. 2007. UHF vs. HF RFID: new insights on the old debate. White Paper. Downloaded on 8/26/2013 at → http://www.intermec.com/public-files/white-papers/en/UHFvs.HF_RFID_wp.pdf.

Karygiannis, T.; Eydt, B.; Barber, G.; Bunn, L.; Phillips, T. 2007. Guidelines for securing radio frequency identification (RFID) systems. Recommendations of the National Institute of Standards and Technology. NIST Special Publication 800-98.

Korten, S.; Kaul, C. 2008. Application of RFID (Radio Frequency Identification) in the Timber Supply Chain. Croatian J. Forest Engineering. 29:85-94.

Mohamed, N.; Garoot, A.H.; Hazza, Z.M. 2009. A case study on impact of RFID adoption in tree inventory management. In: 2nd IEEE International Conference on Computer Science and Information Technology (ICCSIT), Beijing, (2009). 624–628.

Roberts, C.M. 2006. Radio frequency identification (RFID). Computers & Security. 25:18-26.

Ruiz-Garcia, L.; Lunadei, L. 2011. The role of RFID in agriculture: applications, limitations and challenges. Computers and Electronics in Agriculture. 79:42-50.

Zhu, X.; Mukhopadhyay, S.K.; Kurata, H. 2012. A review of RFID and its managerial applications in different industries. Jour. Eng. & Technol. Manage. 29:152-167.

APPENDIX A. PHOTOS OF RFID TAGS TESTED

FRICK Tags	SAG Tags
THINKIFY Tags	VIZINEX Tags
uGROKit Tags	HID Tags