United States Department of Agriculture
Forest Service

U.S. Department of Transportation
Federal Highway Administration

Tech Tips

National Technology & Development Program • **Recreation** • July 2013 • 2300 • 1223–2316P–MTDC

Innovative Design for Short-Span Timber All-Terrain Vehicle Trail Bridges

Jerry D. Barrow, Civil Engineer and James Scott Groenier, Project Leader

A simple, inexpensive, 12-foot-long sawn timber bridge that was designed for an all-terrain vehicle (ATV) trail is also suitable for horse, bicycle, and pedestrian trails that cross small drainages (figure 1). The photographs and construction details in this tech tip originate from a project completed at the Tombigbee National Forest, Mississippi, by Trails Unlimited, a U.S. Department of Agriculture, Forest Service enterprise team that works on trail construction projects throughout the country.

The design of this short-span bridge has been used in national forests in the Southern Region (R-8) of the Forest Service. Other jurisdictions may have other specifications and their own approval requirements for similar trail bridges. It meets the load design criteria of 90 pounds per square foot and is capable of carrying a 10,000-pound trail dozer or similar equipment. The design is suitable for clear spans of 6 to 24 linear feet, using pressure-treated timbers. The assembly hardware, such as bolts, nails, and screws, is hot-dipped galvanized.

The bridge design itself is straightforward (figure 2). The approximate cost of the materials used to build the bridge is $1,500. A knowledgeable, four-person crew can assemble the bridge in about 8 hours. Although the crew needs to assemble the bridge onsite, the longest individual component is 12-feet long, so the crew can carry the components to the site with small motorized equipment, or by hand, if necessary.

Highlights...

- A new design for a simple, inexpensive short-span timber all-terrain vehicle trail bridge is available.
- The design meets current bridge design load requirements and uses innovative ideas to increase the longevity and sustainability of the structure.
- This tech tip includes a sample drawing of a 12-foot bridge.

Figure 1—This bridge was constructed on an all-terrain vehicle trail at the Tombigbee National Forest, Mississippi.

For additional information, contact: *USDA Forest Service, MTDC; 5785 Hwy. 10 West; Missoula, MT 59808–9361. Phone: 406–329–3900; fax: 406–329–3719; email: wo_mtdc_pubs@fs.fed.us*

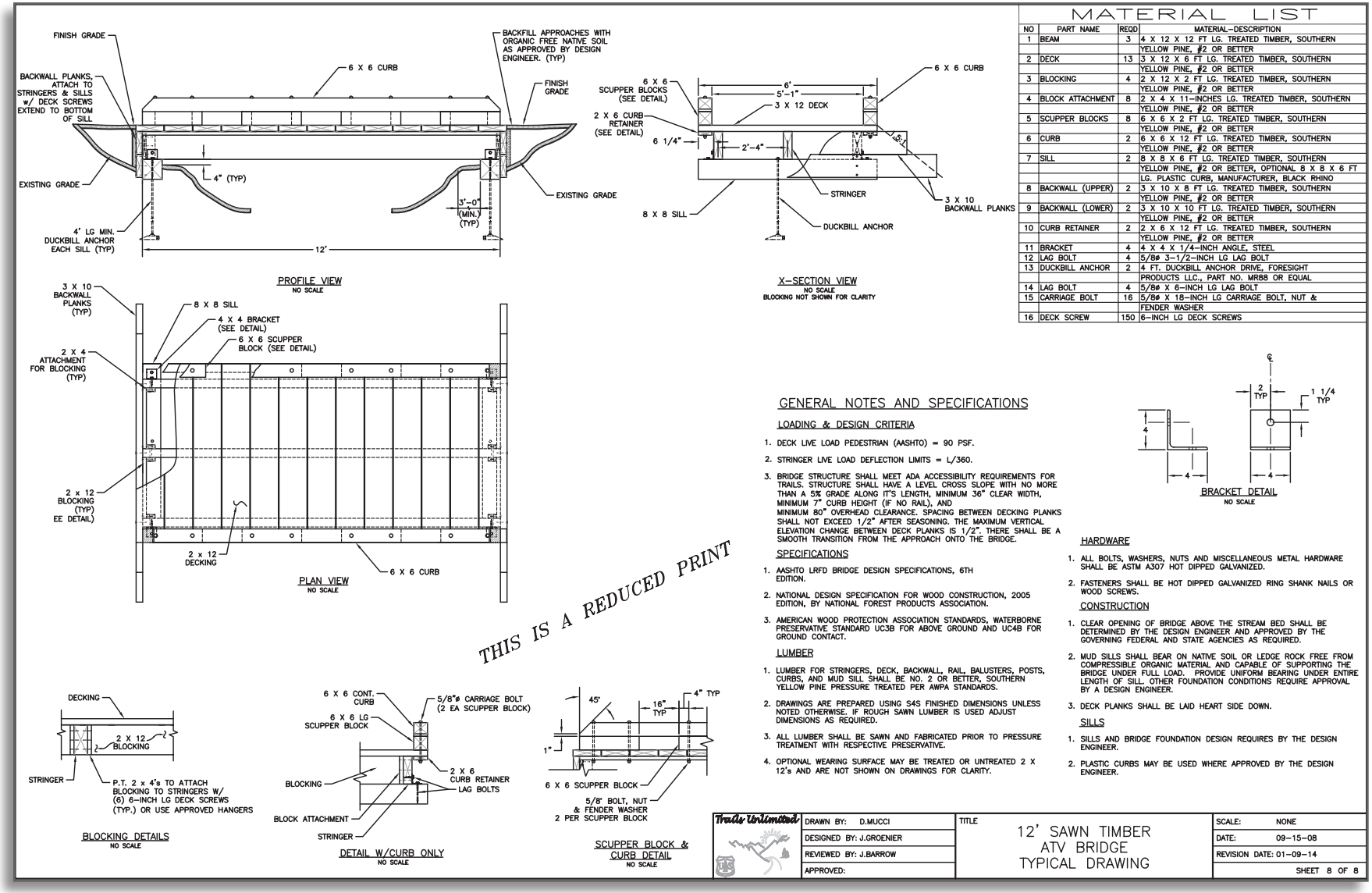

Figure 2—A sample drawing of a 12-foot-long all-terrain vehicle bridge.

Details and Features That Increase Longevity

Several features of this bridge design add to its longevity and are innovative when compared with traditional designs.

The foundation consists of heavy-duty plastic or concrete parking curbs, anchored down with one Duckbill earth anchor per sill.

- Using inexpensive aluminum or polymeric flashing bent over the stringers extends the stringer life by preventing wood-to-wood contact and standing water on the stringer.
- Extending the decking over the top of the backwall reduces the chance of water running down between the backwall and stringer. This extension reduces the chance that the end grain of the stringer will wick moisture into the end of the stringer.
- Extending the decking out over the stringers 6 inches makes installation of the curb easier. Water will run off the end of the decking and not run down the side of the stringers.
- Lengthening the backwalls prevents dirt from wrapping around them and accumulating on the sills against the stringers. This longer backwall helps keep stringers clean and dry and prevents backfill from eroding at the approaches.
- Using 6- by 6-inch curbing with 6- by 6-inch scupper blocks provides an 11-inch high barrier that helps reduce the chance of ATV tires driving over the curb.
- Allowing for 6-inch scupper openings helps water drain better and reduces the chance of leaves collecting on the deck.
- Using paving blocks at the bridge approaches drains water away from the approaches, stabilizes the trail transition material onto the deck, and helps prevent potholes at the approaches caused by backfill settlement and erosion caused by ATV tires, bicycle tires, horse hooves, and even hikers.
- Using running planks is strongly recommended to protect the transverse decking from wear due to snowmobile tracks and horseshoes. Running planks were not used on this ATV bridge.

Construction Details

The innovative features of this design also add to its longevity.

Foundation

The sills consist of 6-inch by 6-inch by 8-foot heavy-duty recycled plastic parking curbs (figure 3) that resist decay. Each sill is anchored by one Duckbill earth anchor attached to a 4-foot-long, ½-inch diameter galvanized steel all-thread rod. The Duckbill anchor, like a toggle bolt, can be driven into the ground with a hydraulic or mechanical jackhammer with the aid of a steel rod gad. Then a ratchet is used to tighten the nut, pulling up the rod, causing the anchor to pivot in the ground, and anchoring it in place. About 3 inches of rod needs to be pulled up to obtain about 3,000 pounds of anchor force. The anchor keeps the sill in place and prevents it from floating off in floods (figure 4).

Sills can also be formed from precast concrete curbs or planks, which stay in place due to their weight and last a long time. Traditional sills are 8-inch by 8-inch by 6-foot long treated southern pine timber, No. 2 grade or better.

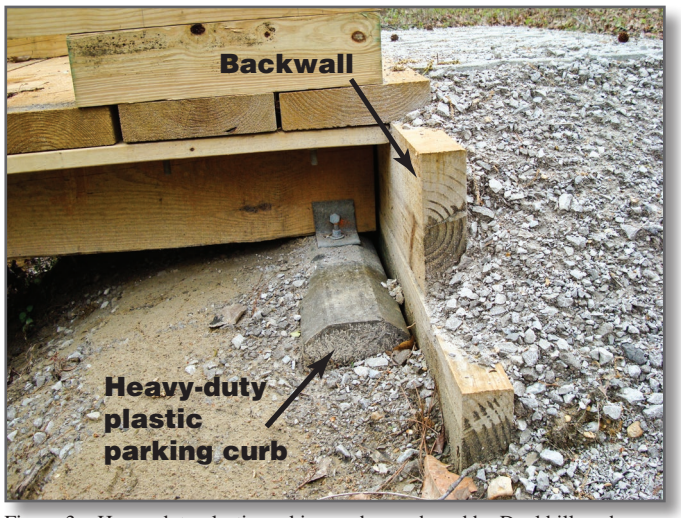

Figure 3—Heavy duty plastic parking curbs, anchored by Duckbill anchors, serve as sills. Two backwall planks are buried to the depth of the bottom of each sill. The backwall is extended well to the sides of the bridge to prevent earth-to-wood contact for both the sill and stringers. Decking extends over the top of the backwall to prevent water from running down between the backwall and the ends of the stringers.

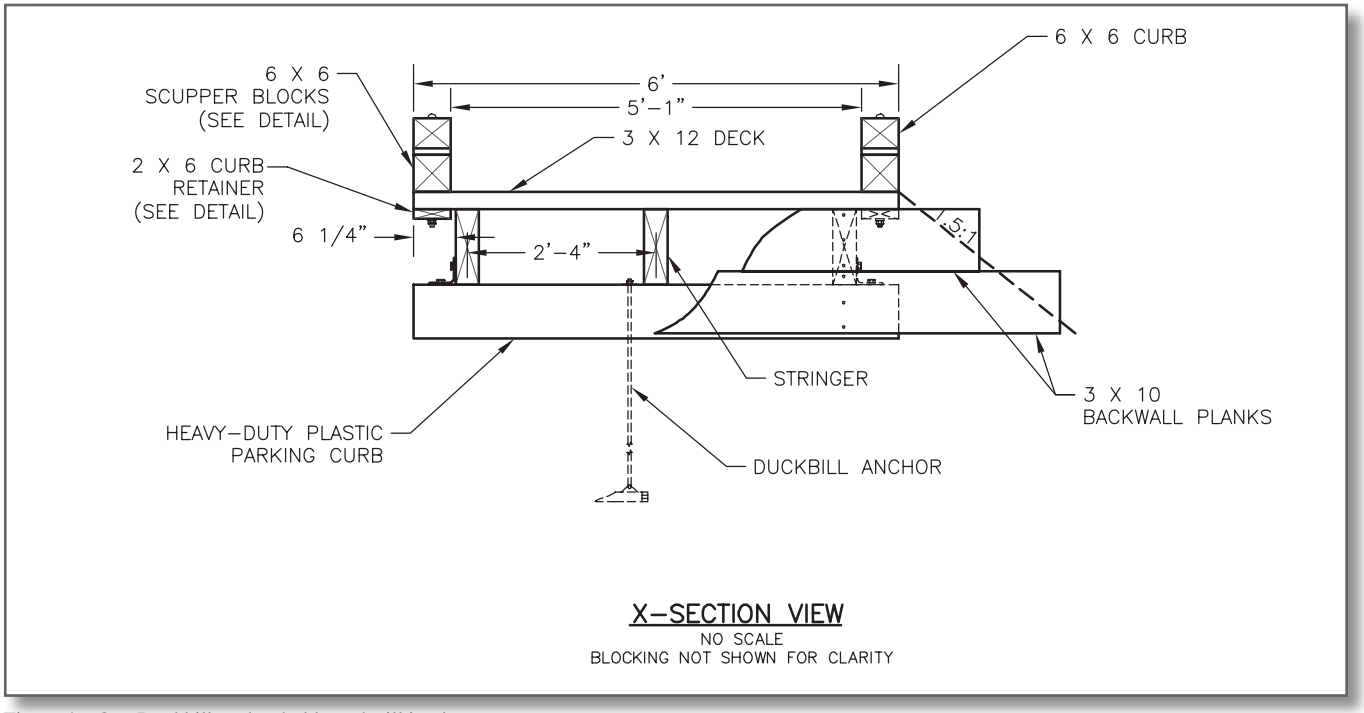

Figure 4—One Duckbill anchor holds each sill in place.

Stringers

The 12-foot-long ATV bridge requires three 4- by 12-inch pressure-treated southern pine stringers. Using three stringers provides redundancy for the structure. If one stringer fails, the other two stringers should be able to support most of the load. When a bridge has two stringers and fails, the structure is more likely to fall into the stream. The three stringers are placed on the sill and the two outside stringers are fastened down with 4- by 4- by ¼-inch steel angle brackets. Blocking between stringers secures and holds down the center stringer and prevents lateral rotation of the stringers. An optional, but inexpensive, way to extend the life of the stringers and protect them from dirt and water is to bend a strip of aluminum or polymeric flashing over the length of the top of each stringer.

Backwall Details

Installing backwalls at the ends of the bridge provides another practical design detail to help keep the stringers and sills clean and free of dirt (see figure 3). The backwall extends to the bottom of the sill to keep dirt from contacting the ends of the stringers. The upper backwall plank extends a minimum of 1 foot beyond the sides of the bridge and the lower backwall plank extends a minimum of 2 feet. The extended backwalls help keep dirt from wrapping around the backwall and accumulating on the sills next to the stringers (figure 5). They also help prevent the approach fill from eroding. Any location where dirt contacts the wood may also accumulate water and start the wood-decay process that will reduce the lifespan of the structure.

Extending the decking over the top of the backwall provides another important detail: reducing the chance of water running down between the backwall and stringer. When water runs down the end of the stringers, the end grain of the stringer may wick moisture into the end of the stringer and start to decay.

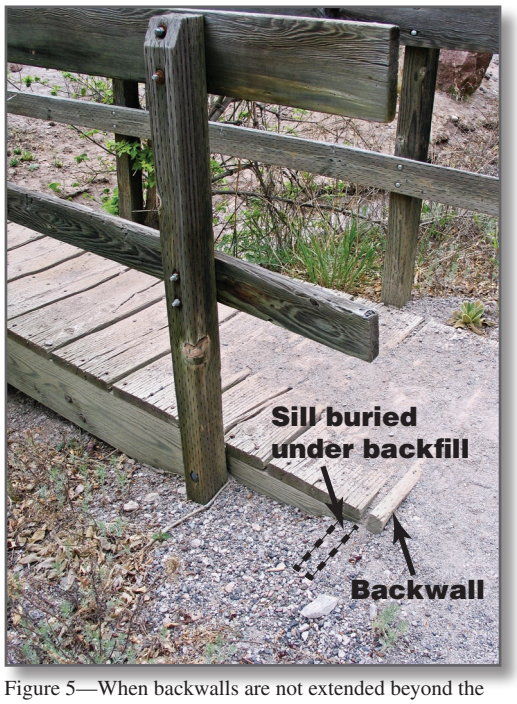

Figure 5—When backwalls are not extended beyond the sides of the stringers, backfill wraps around the backwall, which causes dirt to accumulate on the sills, causing the decay process to begin and allowing the bridge approaches to unravel.

Decks

Decking material is 3-inch by 12-inch by 6-foot-long treated southern yellow pine. The 3-inch thick material is enough to withstand the heavy loading and wear of the ATV tires and, for equestrian bridges, reduces the hollow sound of thinner planks, which can spook a horse. The decks, with the wood laid heartwood side down to reduce cupping, are fastened with 6-inch deck screws with large wafer heads. FastenMaster HeadLOK gimlet point deck screws were used on this installation. The large wafer heads increase the pullthrough strength of the screw in the wood.

On heavily used trail bridges or those used by snowmobiles or horses, untreated timber running planks may be fastened to the top of the deck, providing a wear surface that can be replaced easily. They were not used in this installation. Extending the decking out over the stringers by 6 inches makes installation of the curb easier. Water will run off the end of the decking and not run down the side of the stringers.

Curbs

For an ATV trail application, 6- by 6-inch treated curbs placed on 2-foot-long sections of 6-inch by 6-inch scupper blocks work well (figure 6). It is difficult for ATV tires to drive over the curb without intentional effort (figure 7). The bridge curb ends should be beveled to protect ATV tires from abrupt impacts. Each 2-foot-long scupper block is fastened to the deck with two 5/8-inch-diameter carriage bolts, secured through the curb and deck to 2- by 6-inch curb retainers.

Figure 6—Place curbs on top of scupper blocks, which are held in place with carriage bolts placed through the curb, scupper block, decking, and curb retainer.

Figure 7—The curbs are difficult to drive over with all-terrain vehicle tires without intentional effort. The ends are beveled to protect the tires from abrupt impacts.

Approaches

The grid pavement blocks like those shown in figure 8 are outsloped from the bridge end so the backfill at the bridge ends does not settle to create a lip or pothole after repeated traffic impacts.

The last row of grid pavement blocks is angled down to sit approximately 2 feet below the surface. This helps provide a sustainable transition for the approach.

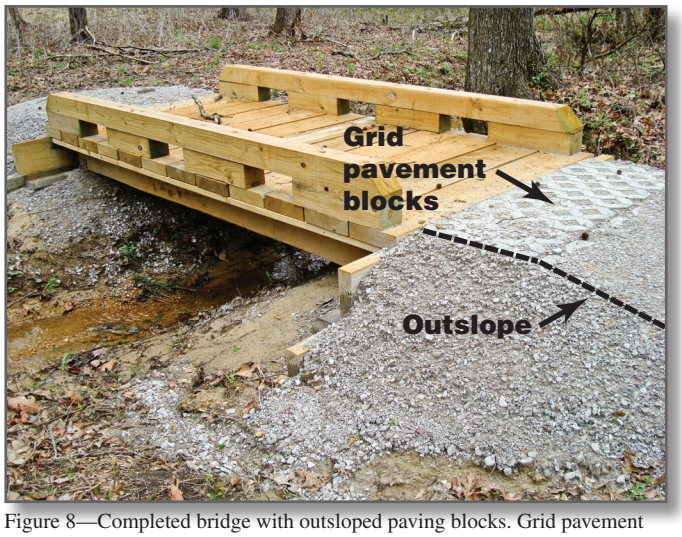

Figure 8—Completed bridge with outsloped paving blocks. Grid pavement blocks sloped downhill from the bridge help prevent the development of potholes adjacent to the bridge backwall. Object markers on each side of both bridge approaches are required for motorized trails on National Forest System lands. The object markers have not yet been installed.

Product Sources

The Forest Service does not endorse products to the exclusion of other products that may be suitable. The following products were used in this installation and should be used as a place to start for comparison with similar products.

- Duckbill anchors
  <http://foresightproducts.com/duckprod.html>
- FastenMaster HeadLOK gimlet point deck screws
  <http://www.Fastenmaster.com>
- Percstone pavers (grid pavement blocks)
  <http://www.hardscapesusa.com>

About the Authors

Jerry D. Barrow joined the Trails Unlimited enterprise team in 2007 as a civil engineer specializing in trail bridge construction. Barrow began his career with the Forest Service in 1985 after 8 years in the private sector and the U.S. Army Corps of Engineers. He earned degrees in forestry and civil engineering from Virginia Tech and the University of Tennessee. He has worked on the Cherokee, Chattahoochee-Oconee, and George Washington National Forests. He served as the project construction engineer for the 1996 Olympic Venue at the Cherokee National Forest.

James Scott Groenier is a professional engineer who began working for the Missoula Technology and Development Center as a project leader in 2003. Groenier started with the Forest Service in 1992 and has worked for the Ashley and Tongass National Forests and for Region 9.

Library Card

Barrow, Jerry D.; Groenier, James Scott. 2012. Innovative design for short-span timber all-terrain vehicle trail bridges. Tech Tip 1223–2316P–MTDC. Missoula, MT: U.S. Department of Agriculture, Forest Service, Missoula Technology and Development Center. 8 p.

A new design for a simple, inexpensive short-span timber all-terrain vehicle (ATV) trail bridge is available. The design uses innovative ideas to increase the longevity and sustainability of the structure. This tech tip describes the features that increase longevity, provides construction details, and includes a sample drawing of a 12-foot bridge.

Keywords: all-terrain vehicles, ATVs, bridges, motorized recreation, planning, recreation management, sustainability, timber, trails

Additional single copies of this publication may be ordered from:

USDA Forest Service
Missoula Technology and Development Center
5785 Hwy. 10 West
Missoula, MT 59808–9361
Phone: 406–329–3978
Fax: 406–329–3719
Email: wo_mtdc_pubs@fs.fed.us

For additional technical information, contact MTDC:

Phone: 406–329–3900
Fax: 406–329–3719

Electronic copies of National Technology and Development publications are available on the Internet at:

http://www.fs.fed.us/eng/pubs

Forest Service and Bureau of Land Management employees can search National Technology and Development documents, CDs, DVDs, and videos on their internal computer networks at:

http://fsweb.mtdc.wo.fs.fed.us/search/
http://fsweb.sdtdc.wo.fs.fed.us/

The Forest Service, an agency of the U.S. Department of Agriculture (USDA), has developed this information for the guidance of its employees, its contractors, and its cooperating Federal and State agencies. The Forest Service assumes no responsibility for the interpretation or use of this information by anyone except its own employees. The use of trade, firm, or corporation names is for the information and convenience of the reader. Such use does not constitute an official endorsement or approval of any product or service to the exclusion of others that may be suitable.

USDA Non-Discrimination Policy

The U.S. Department of Agriculture (USDA) prohibits discrimination against its customers, employees, and applicants for employment on the bases of race, color, national origin, age, disability, sex, gender identity, religion, reprisal, and where applicable, political beliefs, marital status, familial or parental status, sexual orientation, or all or part of an individual's income is derived from any public assistance program, or protected genetic information in employment or in any program or activity conducted or funded by the Department. (Not all prohibited bases will apply to all programs and/or employment activities.)

To File an Employment Complaint

If you wish to file an employment complaint, you must contact your agency's EEO Counselor (http://www.ascr.usda.gov/doc/EEO_Counselor_List.pdf) within 45 days of the date of the alleged discriminatory act, event, or in the case of a personnel action. Additional information can be found online at http://www.ascr.usda.gov/complaint_filing_file.html.

To File a Program Complaint

If you wish to file a Civil Rights program complaint of discrimination, complete the USDA Program Discrimination Complaint Form, found online at http://www.ascr.usda.gov/complaint_filing_cust.html, or at any USDA office, or call (866) 632–9992 to request the form. You may also write a letter containing all of the information requested in the form. Send your completed complaint form or letter to us by mail at U.S. Department of Agriculture, Director, Office of Adjudication, 1400 Independence Avenue, S.W., Washington, D.C. 20250-9410, by fax (202) 690–7442 or email at program.intake@usda.gov.

Persons with Disabilities

Individuals who are deaf, hard of hearing or have speech disabilities and you wish to file either an EEO or program complaint please contact USDA through the Federal Relay Service at (800) 877–8339 or (800) 845–6136 (in Spanish). Persons with disabilities who wish to file a program complaint, please see information above on how to contact us by mail directly or by email. If you require alternative means of communication for program information (e.g., Braille, large print, audiotape, etc.) please contact USDA's TARGET Center at (202) 720–2600 (voice and TDD).

FHWA Notice

This document was produced in cooperation with the Recreational Trails Program of the U.S. Department of Transportation's Federal Highway Administration in the interest of information exchange. The U.S. Government assumes no liability for the use of information contained in this document. The U.S. Government does not endorse products or manufacturers. Trademarks or manufacturers' names appear in this report only because they are considered essential to the objective of this document. The contents of this report reflect the views of the authors, who are responsible for the facts and accuracy of the data presented herein. The contents do not necessarily reflect the official policy of the U.S. Department of Transportation. This report does not constitute a standard, specification, or regulation.