Facilities
Tech Tips

USDA United States Department of Agriculture
Forest Service
Technology & Development Program
August 2011
7300 1173–2308P–MTDC

Water Tanker Fill Station Standard Drawings Include Options

Kathleen Snodgrass, Project Leader

Many locations across the Forest Service fill fire tankers and engines using equipment, such as fire hydrants, that could contaminate drinking water. This practice exists because practical, code-compliant plans have not been easily accessible when a water tanker fill station was needed. In addition, an air gap mechanism that would handle the required flow without splashing and drenching the employees responsible for filling the tanker has not been available commercially and had to be developed (figure 1).

Water tanker fill station standard drawings are now available on the Forest Service internal Web network. These drawings should meet the needs of any water tanker fill location and eliminate the possibility of contaminating drinking water.

The standard drawings include pressure- and air gap-type fill stations (figures 2 and 3) that prevent backflow and potential contamination of the potable water supply. Both fill stations can be used with either a steel or wood support structure and either a camlock quick disconnect or a pipe clamp connection between the tower and the fill hose. The steel structure has an optional swivel that allows the fill arm to swing away from the fill location when not in use. The air gap-type fill station can be constructed with either a self-draining blowoff or a gravity drain for winter shutdown. The standard drawings include keyed notes and details that support all fill station types and options. An engineer must assemble the kit of drawing parts and ensure the tower and foundation meet local structural requirements. The standard drawings for the fill stations, as well as sample operations and maintenance

Figure 1—Testing the air gap prototype. The prototype, built by mechanical engineering technicians at the Missoula Technology and Development Center (MTDC), produces no splash while operating.

Highlights...

- Forest Service fire engines and tankers are often filled by using fire hydrants and other devices that don't protect drinking water supplies from contamination.
- Standard drawings for water tanker fill stations are now available.
- The drawings include pressure and air gap-type fill stations and options to suit almost any location.

For additional information, contact: *Kathleen Snodgrass, project leader; USDA Forest Service, MTDC; 5785 Hwy. 10 West; Missoula, MT 59808–9361. Phone: 406–329–3922; fax: 406–329–3719; email: ksnodgrass@fs.fed.us*

plans, are available to Forest Service and Bureau of Land Management employees in Acrobat PDF and AutoCAD compatible formats at <http://fsweb.wo.fs.fed.us/eng/programs/water/tankerfill.htm>.

Equipment, such as fire hydrants or other devices, that does not prevent backflow should no longer be used to fill tankers. Use of the standard drawings will eliminate unnecessary costs for each National forest to independently develop a design. The uniformity and consistency resulting from using the standard drawings will make training and operation easier for crews that work on more than one unit.

Many thanks to these Forest Service employees:

- Chuck Coleman, Lou Janke, Jennifer Knutson, Jason Peterson, and Shanisha Reese for their development work.
- Wayne Harpel, Satgur Klar, and Donna Wians for their suggestions for improving the fill station designs.
- Scott Gilmore and Doug Lausch for building and testing the air gap prototype.

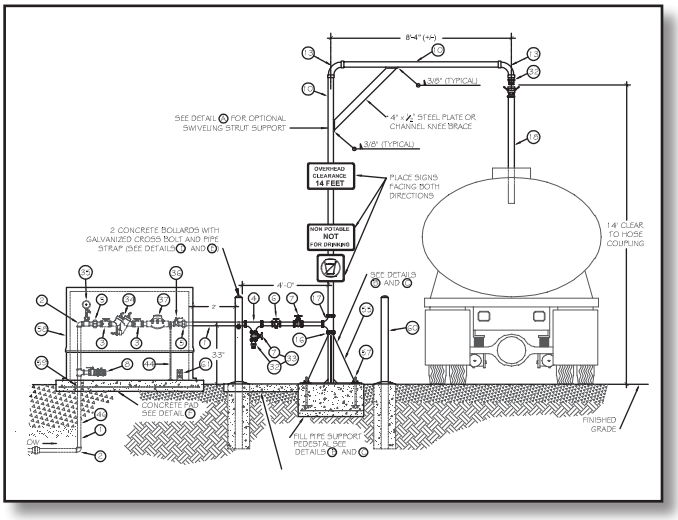

Figure 1—Part of the elevation view of the pressure-type fill station with a steel tower from the water tanker fill station plans.

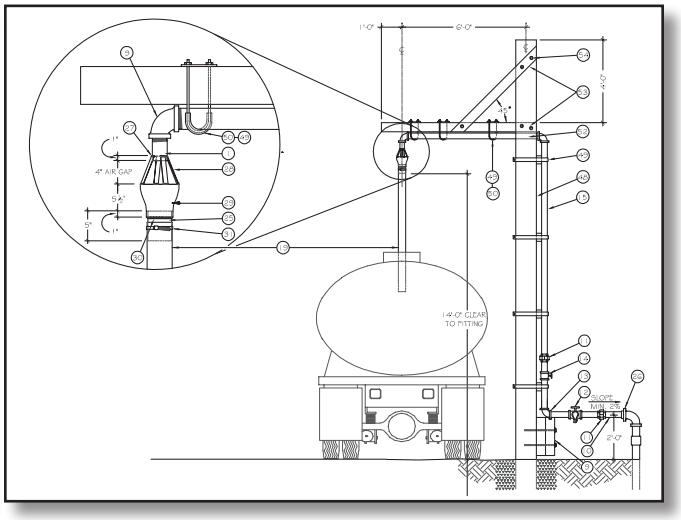

Figure 2—Part of the elevation view of the air gap-type fill station with a wooden tower from the water tanker fill station plans.

Library Card

Snodgrass, Kathleen. 2011. Water tanker fill station standard drawings include options. Tech Tip 1173–2308P–MTDC. Missoula, MT: U.S. Department of Agriculture, Forest Service, Missoula Technology and Development Center. 2 p.

Many locations across the Forest Service use equipment and methods to fill fire tankers and engines that could contaminate drinking water. Fire hydrants or other devices that do not prevent backflow should no longer be used. Water tanker fill station standard drawings now available include options for pressure- and air gap-type fill stations. Using the standard drawings throughout the Forest Service will make training and operation easier for crews that work on more than one unit.

Keywords: air gap, AutoCAD, backflow, code, drawings, engines, fill, fire, hydrant, potable, pressure, splash, tankers, tower, water

For additional information about fill station standard drawings and options, contact Kathleen Snodgrass:

USDA Forest Service
Missoula Technology and Development Center
5785 Hwy. 10 West
Missoula, MT 59808–9361
Phone: 406–329–3922
Fax: 406–329–3719
Email: ksnodgrass@fs.fed.us

The Forest Service, United States Department of Agriculture (USDA), has developed this information for the guidance of its employees, its contractors, and its cooperating Federal and State agencies and is not responsible for the interpretation or use of this information by anyone except its own employees. The use of trade, firm, or corporation names in this document is for the information and convenience of the reader and does not constitute an endorsement by the Department of any product or service to the exclusion of others that may be suitable.

The U.S. Department of Agriculture (USDA) prohibits discrimination in all its programs and activities on the basis of race, color, national origin, age, disability, and where applicable, sex, marital status, familial status, parental status, religion, sexual orientation, genetic information, political beliefs, reprisal, or because all or part of an individual's income is derived from any public assistance program. (Not all prohibited bases apply to all programs.) Persons with disabilities who require alternative means for communication of program information (Braille, large print, audiotape, etc.) should contact USDA's TARGET Center at (202) 720-2600 (voice and TDD). To file a complaint of discrimination, write to USDA, Director, Office of Civil Rights, 1400 Independence Avenue, S.W., Washington, D.C. 20250-9410, or call (800) 795-3272 (voice) or (202) 720-6382 (TDD). USDA is an equal opportunity provider and employer.