Recreation
Tech Tips

United States Department of Agriculture
Forest Service
Technology &
Development Program

April 2004

2300 0423-2301–MTDC

Camera With Altitude for Wilderness Site Monitoring

Mary Ann Davies, Project Leader

Wilderness managers and rangers use a variety of monitoring techniques to document changes in vegetation, soil, and resource impacts over a period of years. Repeat photography is one effective method to document site conditions. Taking photographs from the ground at eye level limits the camera's view (figure 1). When the camera is 8 to 14 ft above the ground, the view can encompass more (figure 2). This tech tip describes two systems for accurately raising the camera to better view site conditions.

The first system (figure 3) consists of two hiking staffs, a monopod, and a digital camera. This system adds just 3 lb to a wilderness ranger's pack, assuming the ranger would have been hiking with the staff anyway. The second system, which is heavier but less expensive, uses an extendable fiberglass painting pole and a camera.

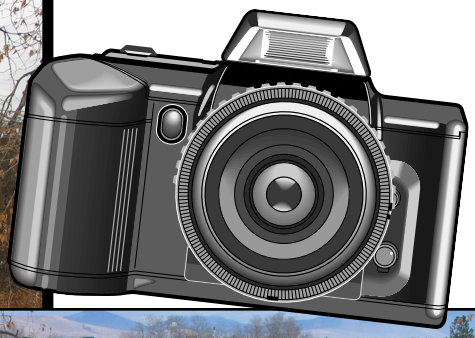

Figure 1—A photo for site monitoring taken from eye level.

Figure 2—Raising the camera improves the view for site monitoring.

For additional information, contact: *Mary Ann Davies, Project Leader; USDA Forest Service, MTDC; 5785 Hwy. 10 West; Missoula, MT 59808–9361. Phone: 406–329–3981; fax: 406–329–3719; e-mail: mdavies@fs.fed.us*

Figure 3—Hiking staffs specially configured to support a camera with altitude for site monitoring.

No matter which system is used to document changes over time, photographs must be taken from the same place, showing the same scene under conditions that are as nearly identical as possible. The exact location where such a photograph is taken is known as a photopoint. Each of the photos taken in different years is known as a replicate. Replicate photographs can show dramatic changes in a landscape, or a lack of changes, even when the original photo was not taken with that goal in mind. (See Smith and Arno, 1999, *Eighty-eight Years of Change in a Managed Ponderosa Pine Forest*, RMRS-GTR-23, available from the National Technical Information Service, PB99-151805, *http://www.intis.gov*)

Digital Cameras

A 4-megapixel digital camera can take pictures that record enough detail to be useful for monitoring. Set the camera at its highest possible settings. For example, the highest resolution for the camera tested, the Canon PowerShot G3, is large (2,272 by 1,704 pixels) with *superfine* compression. The highest possible settings produce the highest-resolution photographs, but use more memory on the camera's memory chip.

When buying a digital camera, choose one that has an optional wireless remote shutter release. You will need to use the remote shutter release to fire the camera when it's 14 ft above you.

Always treat each original photograph as a negative. Keep the unaltered original photograph for its documentary value by copying it onto a CD or the home unit's server. Do not manipulate the original photograph in any way. If you copy the unaltered original photograph to an archival medium, the extra information attached to the digital photograph will remain intact. This information includes camera settings such as the focal length, ISO speed (the digital camera's sensitivity to light), and shutter exposure—everything needed to replicate the photo in the future.

Use the imaging software provided with your camera to rename your photograph and add additional comments in the photograph's header. When a digital photograph has been opened and manipulated by zooming, rotating, or any other option, the information in the header can be lost forever. Instead of manipulating the original, manipulate a copy.

Get to know your camera and how to adjust and read the settings. Read the manual and experiment with the camera before conducting any monitoring work.

The photo manipulation software that comes with the Canon PowerShot G3 is similar to software that comes with most digital cameras. One software application, PhotoStitch, is especially useful. This feature allows you to stitch together several overlapping photographs taken from the same photopoint to create one panoramic photograph.

Documenting Site Conditions in Wilderness

Wilderness managers and rangers "gather information and carry out research in a manner compatible with preserving the wilderness environment to increase

understanding of wilderness ecology, wilderness uses, management opportunities, and visitor behavior" as established by the Forest Service directives in FSM 2320.2.

Photographs are just one means of documenting wilderness site conditions. For more information on monitoring techniques, consult *Wilderness Campsite Monitoring Methods: A Sourcebook*, by David N. Cole, 1989. (USDA Forest Service Intermountain Research Station, General Technical Report INT-259, *http://www.leopold.wilderness.net/pubs/179.pdf*)

Connecting the Monopod to the Hiking Staffs

The monopod and hiking staff heads come with standard 1/4-in camera stud mounts. Unscrew the wooden knob on top of the hiking staffs to reveal the 1/4-in camera mounts. A machine shop can make a custom connector using 1 1/4-in-wide by 1/2-in-thick by 3-in-long aluminum stock (see MTDC drawing 1028-01, page 8). Place sticky-backed hook and loop fastener (Velcro) on the metal platform and on the back of the level (figure 4). Attach the level using the hook and loop fastener. Screw the monopod and hiking staff into the custom-made connector.

Figure 4—A custom-made connector with an attached level joins the monopod to the lower hiking staff.

Connecting the Hiking Staffs

Choose hiking staffs that come with a universal 1/4-in stud camera mount and a steel hiking spike, preferably heavier hiking staffs, those weighing 16.5 oz or more. The Missoula Technology and Development Center tested the Tracks Sherlock staff by Cascade Designs. Hiking staffs come with a rubber hiking boot that covers a steel spike. Using the threaded steel spikes, two staffs can be connected with a 3/8-16 UNC, 4-in-long steel coupling hex nut (figure 5). If you extend both hiking staffs to their full length, the assembly may flex and become a bit unwieldy. In such a case, one person can hold the assembly and an assistant can monitor the portable LCD viewfinder and activate the camera's remote shutter release.

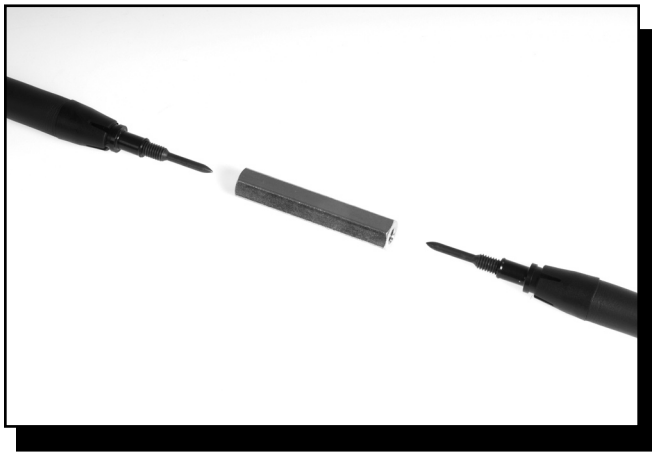

Figure 5—A hex nut couples the two hiking staffs.

Applying the 0- to 90-Degree Sticker to the Bogen Tilt Head

The camera's tilt needs to be documented so photos can be replicated in the future. Download and print the 0- to 90-degree drawing (figure 6, available from MTDC) onto adhesive-backed 8 1/2- by 11-in paper. Unscrew the Bogen No. B03232 camera tilt head handle and pull out the large bolt. Cut and apply the 0- to 90-degree sticker to both sides of the tilt head.

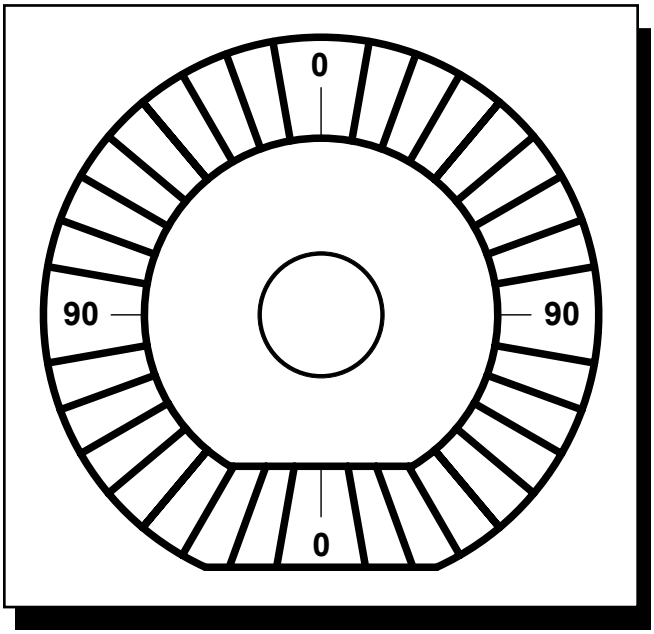

Figure 6—The 0- to 90-degree sticker used to record the camera's tilt angle.

Assemble the tilt head and score a vertical line under the tilt head bolt (figure 7).

Figure 7—The Bogen tilt head with the 0- to 90-degree tilt sticker in place.

Attaching the Camera to the Tilt Head and Hiking Staff

Screw a $\frac{1}{4}$- to $\frac{3}{8}$-in converter bushing (figure 8) onto the hiking staff's camera mounting stud. Screw the Bogen tilt head onto the hiking staff's camera mount. The base of many digital cameras has a $\frac{1}{4}$-in threaded tripod mounting hole.

Figure 8—A bushing converts the hiking staff's $\frac{1}{4}$-in mount to a $\frac{3}{8}$-in mount for the Bogen tilt head.

Screw the camera onto the tilt head securely. Twist the camera slightly offcenter and turn the gray knob on the tilt head to straighten the camera and secure it tightly. Connect the video cable to the *video out* port on the camera.

Use tape or hook and loop fastener (Velcro) to tie the video cable lead coming from the camera to the hiking staff, ensuring that the connector will not pull out. Turn the camera on and set it to receive the wireless remote signal. Once all the components have been assembled (figure 9), plug the stereo jack cable into the *video in* port on the miniature LCD viewfinder. The image on the miniature LCD viewfinder is the image the camera sees. Using the miniature LCD viewfinder, determine the appropriate tilt angle to document the site. The scored line on the Bogen tilt head will align with a degree of tilt on the 0- to 90-degree sticker. Record the tilt angle. Camera tilt angles will read from 0 to 90 degrees in 10-degree increments. A horizontally aligned camera will read 0 degrees.

Adjust the height of the hiking staffs, the monopod, and the angle of the camera for the desired view. Make certain the camera system is level by positioning the bubble levels in the center of both directional bars on the cross-check level.

Figures 9—Detailed view of the camera-with-altitude unit.

Establishing a Photopoint and Using an Elevated Camera

Determine an appropriate location for the photopoint by viewing the image through the camera's remote viewfinder. Document the tilt angle of the camera using the 0- to 90-degree sticker (figure 6) on the tilt head. Record the distance and compass bearing from the location of the pole and camera assembly to physical landmarks, such as boulders, large trees, or other permanent objects. Monitoring sites are usually rephotographed after set intervals, sometimes as long as 5 years or more.

Good recordkeeping is a must. Photographs should be taken during the same time of year, under the same weather conditions if possible, and at the same time of day. Record the type and model of each camera and the camera settings used at a photopoint: ISO speed, zoom setting, aperture speed, and so forth.

Camera settings can be displayed through the digital menu or function display. Many cameras determine and record these settings automatically, but you should record the actual values. A photograph taken with another camera of the camera setup and physical landmarks may provide valuable information for someone trying to locate the photopoint many years later.

For detailed information on effective methods for documenting repeat photography, consult Photo Point Monitoring Handbook: *Part A-Field Procedures and Part B-Concepts and Analysis*. Frederick C. Hall. 2002. (USDA Forest Service Pacific Northwest Research Station, Gen. Tech. Rep. PNW-GTR-526, *http://www.fs.fed.us/pnw/pubs/gtr526*)

Specifications for a Lightweight Camera Elevation System

Tracks Sherlock hiking staff with camera mount

- Adjustable length: 42.5 to 57.5 in
- Weight: 16.5 oz
- Cost: about $45
- Available from: Cascade Designs, Inc. at *http://www.trackspoles.com* or from a local sporting goods store

Bogen No. 3249 four-section compact monopod
- Adjustable length: 20 to 60 in
- Weight: 1.7 lb
- Cost: about $45
- B&H No. BO680
- Available from: B&H Photo at *http://www.bhphotovideo.com*

Bogen No. 3232 swivel tilt head
- Weight: 9.5 oz
- Cost: about $18
- B&H No. BO3232
- Available from: B&H Photo at *http://www.bhphotovideo.com*

Hama bushings $^1/_4$- to $^3/_8$-in converter (10 pack)
- Cost: about $10
- B&H No. HAB.2538
- Available from: B&H Photo at *http://www.bhphotovideo.com*

Surveyors foot for monopod (optional)
- Cost: about $18
- B&H No. BO3257
- Available from: B&H Photo at *http://www.bhphotovideo.com*

Digital camera
- Video output
- Wireless remote shutter release
- 4 megapixel or higher resolution
- Photo manipulation software
- Product tested: Canon PowerShot G3

Miniature color LCD TV (viewfinder)
- Video input
- Battery powered
- Screen size: 1.8 in or larger
- Cost: about $60
- Product tested: Action ACN-5318, 1.8-in LCD color portable TV
- Available from: American Action, Inc. on the Internet

12-ft stereo cable with $^1/_8$-in stereo plugs on both ends (to connect the camera to the LCD TV viewfinder)
- Available from: electronics stores. Note: To ensure that the cable is compatible, take the camera and miniature LCD viewfinder to the store. Make sure that the cable fits and that the image shows up properly on the LCD viewfinder.

Cross-check level
- Cost: about $4
- Part No. 6C225
- Available from: W.W. Grainger, Inc. at *http://www.grainger.com*

Coupling hex nut (to connect two hiking staffs)
- $^3/_8$-16 UNC by 4-in long, grade 2 steel
- Cost: about $9
- Item No. 90264A212
- Available from: McMaster-Carr at *http://www.mcmaster.com*

0- to 90-degree sticker for the camera tilt head
- Available from the MTDC Web site: *http://www.fs.fed.us/eng/t-d.php?link=pubs/pdfpubs/pdf04232301/90deg_sticker.pdf*

Custom-threaded connector (to connect the hiking staff to the monopod)
- Made by a machine shop or contact MTDC
- See drawing MTDC 1028-01 (page 9)

Approximate total cost, excluding camera: $250

Setting Up the Inexpensive Camera Elevation System

When weight and bulk are not a concern, this inexpensive system can provide an enhanced view for documenting topics of concern for foresters, wildlife biologists, botanists, or nature enthusiasts.

Choose a paint roller with a $^5/_{16}$-in-outside-diameter metal shank. Use a hacksaw to cut the metal shank of the paint roller holder to a length of 2 in. File the burrs left by the hacksaw cut. Use a $^5/_{16}$-18 UNC thread die cutting tool to cut threads on $^1/_2$ in of the metal shank. Screw the standoff onto the metal shank of the paint handle and assemble the plastic paint roller handle on the paint extension pole (figure 10). Screw the Bogen tilt head onto the standoff. If a level is warranted, use a U-bolt and angle iron to create a platform for the level.

Attach the camera onto the tilt head securely by twisting the camera slightly off center and turning the gray knob on the tilt head to straighten the camera. Connect the video cable to the *video out* port on the

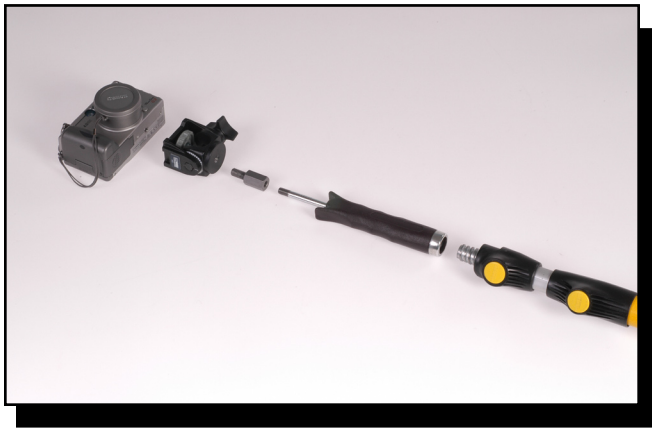

Figure 10—Detailed view of the camera-with-altitude unit using a paint pole rather than a monopod and hiking staffs.

camera and to the *video in* port on the miniature LCD viewfinder. Turn the camera on and set it to receive the wireless remote signal. Using the LCD viewfinder, determine the appropriate tilt angle for the camera and record the angle.

Specifications for an Inexpensive Camera Elevation System

Extendable fiberglass paint pole
- Adjustable length: 8 to 13 ft
- Cost: about $35

Paint roller with plastic threaded handle and 5/16-in outside diameter metal shank
- Cost: about $4

Male-to-female reducing standoff
- $^{3}/_{8}$-16 UNC with a $^{5}/_{16}$-18 UNC by 1-in-long, hex reducing standoff
- Item No. 94402A140
- Cost: about $15
- Available from: McMaster-Carr at *http://www.mcmaster.com*

Conclusions

Take photos—check your exposures—stay level—keep accurate records—have fun!!

Acknowledgments

Special thanks to the Sawtooth National Recreation Area wilderness manager, Liese Dean, and her field crew for testing the systems and providing valuable input, to Ben Croft for his photographic expertise, and also to Tyler Kuhn and Mike Huey for helping with shop design.

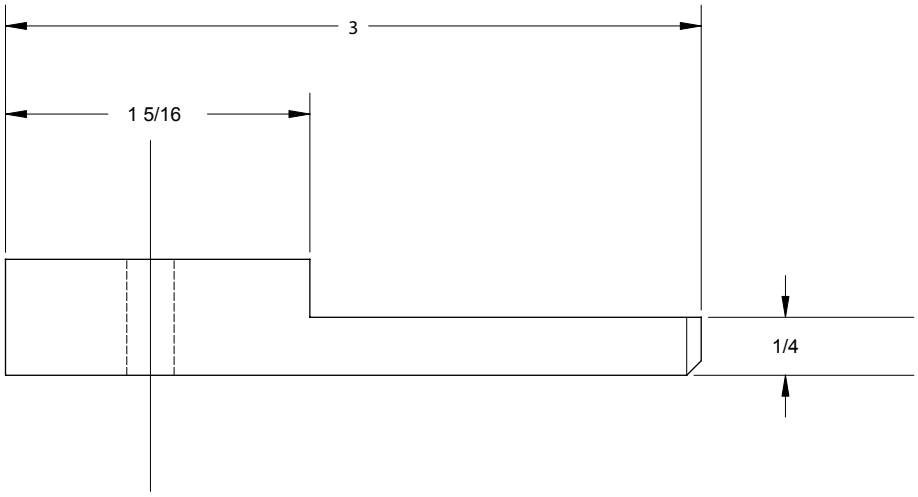
3
1 5/16
1/4

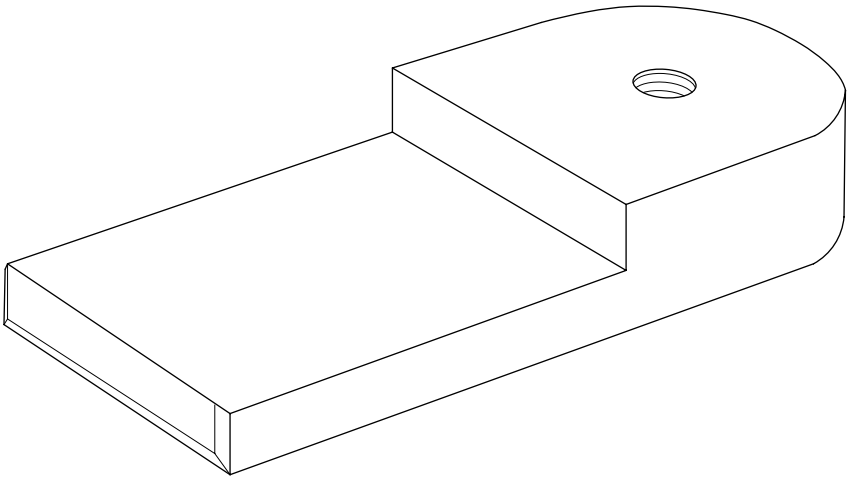

MATERIAL LIST

NO	PART NAME	REQD	MATERIAL-DESCRIPTION
1	TAB	1	1/2-INCH FLAT, 2024 ALUMINUM

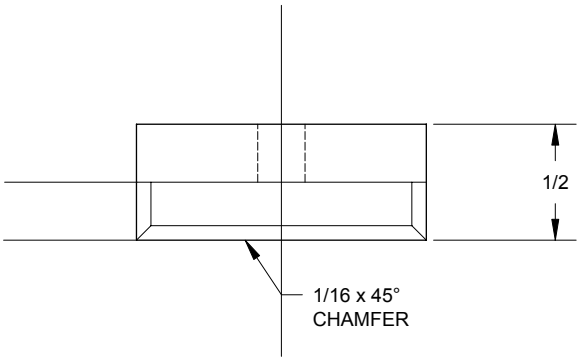

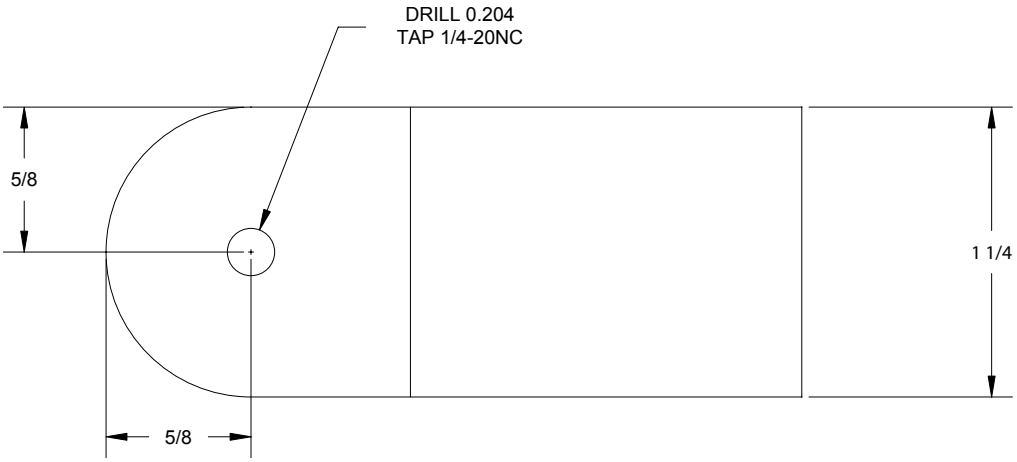

UNLESS OTHERWISE SPECIFIED
TOLERANCES:
FRACTIONS +/- ____
DECIMALS +/- ____
ANGLES +/- ____
DIMENSIONS ARE IN INCHES
BREAK SHARP EDGES

DATE	REVISION	BY

U. S. DEPT. OF AGRICULTURE
FOREST SERVICE
TECHNOLOGY & DEVELOPMENT CENTER
MISSOULA, MONTANA

DRAWN D.MUCCI
DESIGNED T.KUHN
CHECKED M.DAVIES
APPROVED M.DAVIES
SCALE FULL
DATE DEC 2003

TITLE
CAMERA WITH ALTITUDE
THREADED CONNECTOR

1028-01.dwg

SHEET 1 OF 1

MTDC-1028

About the Author

Mary Ann Davies received a bachelor's degree in mechanical engineering with a minor in industrial and management engineering from Montana State University in 1988. She worked in the Pacific Northwest Region as a facility engineer and as a tramway engineer Mary Ann has worked in fire management as a crewmember and as a crewboss. She worked for 5 years with the Rocky Mountain Research Station in the fire chemistry and fire behavior groups before coming to MTDC in 1999.

Library Card

Davies, Mary Ann. Camera with Altitude for Wilderness Site Monitoring. Tech. Rep. 0423-2301-MTDC. Missoula, MT: U.S. Department of Agriculture, Forest Service, Missoula Technology and Development Center. 10 p.

Describes two systems that raise a camera above the ground to get a better view of site conditions. When photographs are taken from a point above the site, the view can encompass more. Wilderness managers use photographs to document changes in site conditions over a period of years. Either of the two systems described in this tech tip can help managers take photographs for site monitoring.

Simple directions for establishing a photopoint and using an elevated camera are provided. Specifications for the two systems also are included.

Keywords: digital cameras, hiking staffs, photographs, photopoints, remote shutter releases, wilderness management

Additional single copies of this document may be ordered from:
USDA Forest Service, MTDC
5785 Hwy. 10 West
Missoula, MT 59808–9361
Phone: 406–329–3978
Fax: 406–329–3719
E-mail: *wo_mtdc_pubs@fs.fed.us*

Electronic copies of MTDC's documents are available on the Internet at:
http://www.fs.fed.us/eng/t-d.php?link=pubs

For additional information, contact Mary Ann Davies at MTDC.
Phone: 406–329–3981
Fax: 406–329–3719
E-mail: *mdavies@fs.fed.us*

Forest Service and Bureau of Land Management employees can search a more complete collection of MTDC's documents, videos, and CDs on their internal computer network at:
http://fsweb.mtdc.wo.fs.fed.us/search

The Forest Service, United States Department of Agriculture (USDA), has developed this information for the guidance of its employees, its contractors, and its cooperating Federal and State agencies, and is not responsible for the interpretation or use of this information by anyone except its own employees. The use of trade, firm, or corporation names in this document is for the information and convenience of the reader, and does not constitute an endorsement by the Department of any product or service to the exclusion of others that may be suitable.

The U.S. Department of Agriculture (USDA) prohibits discrimination in all its programs and activities on the basis of race, color, national origin, sex, religion, age, disability, political beliefs, sexual orientation, or marital or family status. (Not all prohibited bases apply to all programs.) Persons with disabilities who require alternative means for communication of program information (Braille, large print, audiotape, etc.) should contact USDA's TARGET Center at (202) 720-2600 (voice and TDD).

To file a complaint of discrimination, write USDA, Director, Office of Civil Rights, Room 326-W, Whitten Building, 1400 Independence Avenue, SW, Washington, D.C. 20250–9410, or call (202) 720-5964 (voice and TDD). USDA is an equal opportunity provider and employer.