United States
Department of
Agriculture

Forest Service

**Technology &
Development
Program**

7100 Engineering
2300 Recreation
July 2007 MTDC
0071-2847-MTDC

How to Prevent Woodpeckers From Damaging Buildings

How to Prevent Woodpeckers From Damaging Buildings

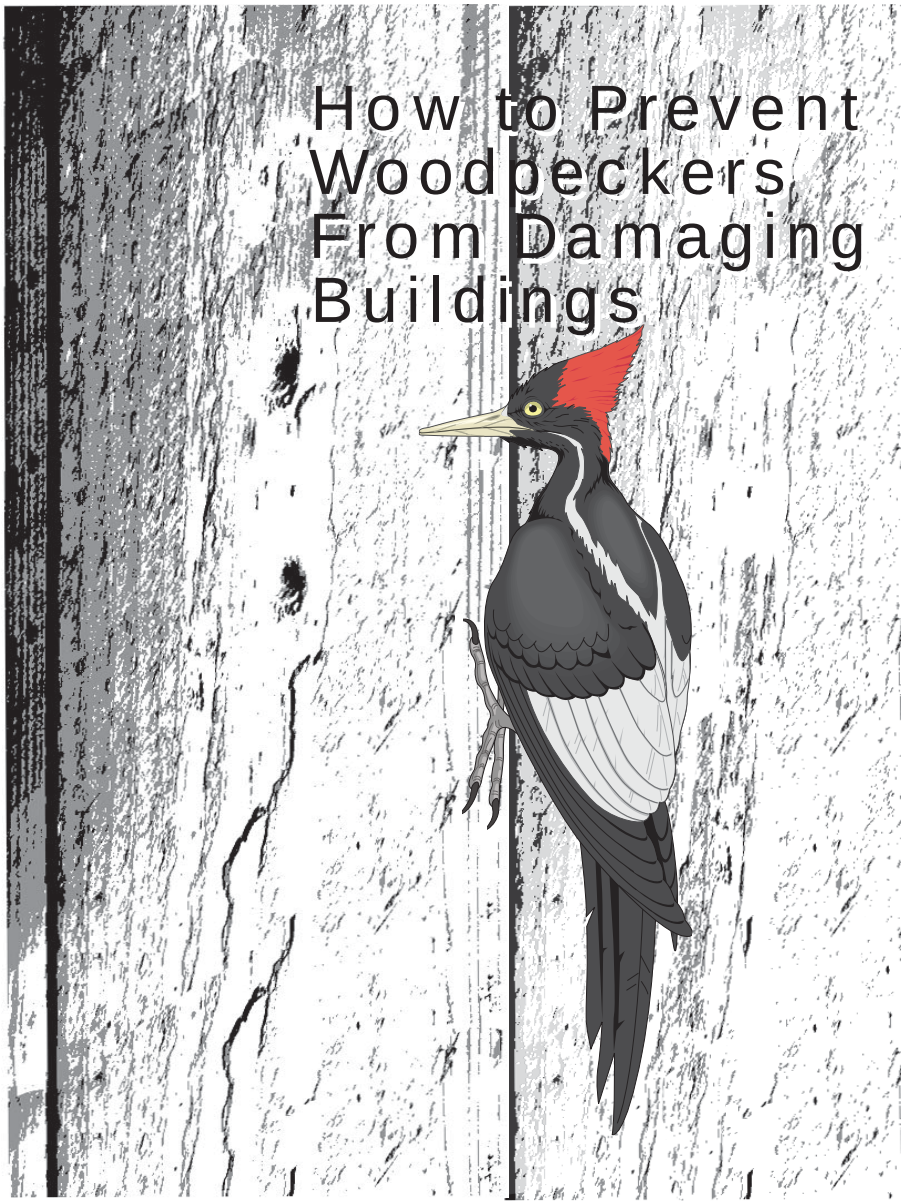

Tony Jasumback
Project Leader

Lisa Bate
Wildlife Biologist

Steve Oravetz
Program Leader

USDA Forest Service
Technology and Development Program
Missoula, Montana

8E82L52—Woodpeckers

July 2000

The Forest Service, United States Department of Agriculture, has developed this information for the guidance of its employees, its contractors, and its cooperating Federal and State agencies, and is not responsible for the interpretation or use of this information by anyone except its own employees. The use of trade, firm, or corporation names in this publication is for the information and convenience of the reader, and does not constitute an endorsement by the Department of any product or service to the exclusion of others that may be suitable. The U.S. Department of Agriculture (USDA) prohibits discrimination in all its programs and activities on the basis of race, color, national origin, sex, religion, age, disability, political beliefs, sexual orientation, or marital or family status. (Not all prohibited bases apply to all programs.) Persons with disabilities who require alternative means for communication of program information (Braille, large print, audiotape, etc.) should contact USDA's TARGET Center at (202) 720-2600 (voice and TDD). To file a complaint of discrimination, write USDA, Director, Office of Civil Rights, Room 326-W, Whitten Building, 1400 Independence Avenue, SW, Washington, D.C. 20250-9410 or call (202) 720-5964 (voice and TDD). USDA is an equal opportunity provider and employer.

Table of Contents

Introduction 1

Nesting 2

- Solving Problems Related to Nesting 3

Feeding 5

- Solving Problems Related to Feeding 5

Drumming 6

- Solving Problems Related to Drumming 6

Other Possible Solutions 6

Repairing Damage Caused by Woodpeckers 7

References 8

Appendix A—Drawings for a Northern Flicker Nest Box 9

Introduction

Woodpeckers damage Forest Service facilities in urban areas as well as those in remote settings. The damage can be relatively large holes used for nesting cavities, small cone-shaped holes the woodpeckers make as they search for insects, or paint chipped off by woodpeckers drumming on the sides of buildings. Most damage to buildings seems to be near the eaves, especially in places where woodpeckers can get a foothold. Woodpeckers do not limit their activities to wood buildings. One space shuttle mission was delayed while workers repaired damage to foam insulation on the shuttle's external fuel tanks.

No one seems to know for sure why woodpeckers damage buildings. Some suggestions include:

- A shortage of natural nesting sites
- Feeding on insect larvae in the siding
- Drumming to attract a mate or mark a territory
- Just for the fun of it.

Help! Woodpecker on a Rampage

This is a last, desperate appeal for succor from any knowledgeable authority, excluding the Missoula Police Department or the Fire Department, who, while dealing on a daily basis with criminals, nuisances and felonious destroyers of wooden buildings, may have the expertise to deal with the villain who has wrecked property and disturbed the quasi-rural atmosphere of peace and quietude that characterizes our mid-Rattlesnake Elysium.

I refer of course to the big, fat, demented woodpecker who has for the last month or so made it his business to hack 6-inch holes in my cedar siding and the inch-thick underlying Thermax which I had never before considered to be a source of tasty insectiferous nutrition, being distinctly non-organic….

Will no one rid me of this meddlesome woodpecker?

More to the point, can someone tell me how to patch Thermax and vertical-channel cedar siding? HELP!

Excerpts from a letter to the editor of the *Missoulian* in Missoula, MT.

Nesting

When woodpeckers decide to use a building for a nest site, they usually have a reason. Most woodpeckers need large snags or trees in which to build their nests. If they can't find them, they will use homes, buildings (Figure 1), or even telephone poles as substitutes. The best way to prevent woodpeckers from creating nest holes in buildings is to provide suitable nest trees nearby. Woodpeckers are territorial. The ones you provide a home for will drive others of the same species away.

Making a hole in sound wood takes a lot of energy. Most woodpeckers prefer snags and trees whose centers have been softened or decayed by heartrot. Heartrot is a caused by different types of fungi that come into contact with the heartwood of a live tree. Heartwood is the older, darker, central wood in a tree. Heartrot does not kill the tree, but softens, or hollows out, the center. The longer a tree lives, the higher the chance that it will contract heartrot. This may be one reason woodpeckers prefer to nest in large trees and snags. Younger trees, which are generally smaller, may not have lived long enough to develop heartrot. Decay in sapwood can also provide a suitable nest site if the tree has a thick layer of sapwood. Sapwood is the newly formed, lighter wood between the heartwood and the bark.

Figure 1—Damage caused when woodpeckers drill holes for a nest.

What makes a tree with heartrot suitable for nesting birds? Trees and snags with heartrot usually have sound sapwood. This provides an ideal situation for nesting and roosting cavity-nesters. The sapwood provides insulation from the weather and protection from predators. The decayed heartwood makes it easier to excavate the nest cavity. Buildings function like nest trees, providing a hard, protective shell on the outside, while they are hollow on the inside.

Woodpeckers are not the only species that benefit from suitable nesting snags and trees. Woodpeckers are primary cavity nesters, which means that they create nest and roost sites for themselves and many other species. Secondary cavity-nesting birds, such as bluebirds, Wood Ducks, and swallows, cannot excavate their own cavities. They depend on woodpeckers to do this work for them. Many mammals such as pine marten, raccoon, and black bears, use hollow trees as den sites. Small mammals may benefit from the work of woodpeckers.

Nearly all woodpeckers and cavity-nesting birds eat insects. Research has shown that in areas where their numbers are strong, cavity-nesting birds can prevent or slow down local outbreaks of insect pests. Insect control by cavity-nesting birds can help protect valuable timber resources. Cavity-nesting birds can benefit farmers by controlling insect pests such as grasshoppers and certain beetles. They may also help control mosquitoes. A single swallow or bat,

both secondary cavity nesters, can eat up to 1,000 mosquitoes a day. So woodpeckers can make homes for cavity nesters that can help you clean up the neighborhood.

Figure 2—A woodpecker excavated a nest in this tree, which had been topped to provide an anchor for a cable car crossing on a river in Montana.

Solving Problems Related to Nesting

Long-Term Solutions

To select suitable snags for woodpeckers, choose the largest diameter and tallest snags that are set back a safe distance from buildings. If the only snags or trees with decay happen to be near buildings or walkways, consider topping them to 20 feet or less. A 10-foot-tall snag won't present much of a safety risk and may be used by several cavity nesters (Figure 2).

To select suitable trees for nesting, look for large trees that have a broken top. This often indicates heartrot. Labeling these trees with a "Wildlife Tree" sign will help inform visitors of the benefits of these dead and dying trees.

In areas without snags, managers should create nest trees. Several methods can be used. Snags can be created by topping a tree with a chain saw or girdling the tree up high. Girdling the base of a tree is not recommended because these trees tend to fall over quickly. Perhaps the best way to create suitable nest trees is to inoculate live trees with decay fungi. This can be done by drilling a small hole in the tree trunk and inserting a dowel infected with live heartrot fungi. Trees infected with heartrot can be used for many years by nesting woodpeckers and other species. Check with local foresters or wildlife biologists to determine which tree species are the best to retain as wildlife trees.

In areas where it may be years before suitable nest trees and snags can be provided, managers should try to discourage woodpeckers from using buildings for nesting and provide a nest box they can use.

Immediate Solutions

The best way to prevent further woodpecker damage to the eaves of a building is to erect netting 2 to 3 inches from the side of the building recommends Dan Casey, a biologist for the American Bird Conservancy in Kalispell, MT. A mesh of $^3/_4$ inch is generally recommended, according to Rex E. Marsh (*Woodpeckers*, 1994). At least 3 inches of space should be left between the netting and the damaged building so that birds cannot cause damage through the mesh. The netting can also be attached to the overhanging eaves and angled back to the siding below the damaged area and secured taut but not overly tight (Figure 3). Be sure to secure the netting so that the

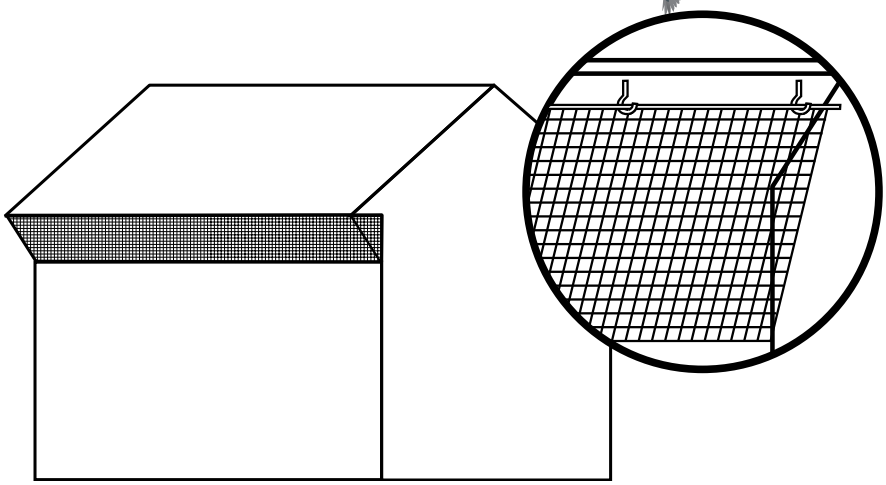

Figure 3—Plastic netting attached to a building from the outside edges of the eave and angled back to the wood siding. Insert shows one method of attachment using hooks and wooden dowels (used with permission from *Woodpeckers*, 1994, Rex E. Marsh).

Figure 4—Northern Flickers are one of the species of woodpeckers most likely to damage buildings (photo used by permission of the Cornell Lab of Ornithology, photographer J.R. Woodward).

birds have no way to get behind it. If installed property, the netting is barely visible from a distance. If the birds move to another area of the dwelling, that area too will need to be netted.

Netting is becoming increasingly popular as a solution to woodpecker problems because it consistently gives desired results.

Northern Flickers are the woodpecker species most likely to try to nest in a building. If Northern Flickers (Figure 4) begin damaging a building to excavate a nest cavity, sometimes they will use a nest box mounted over the damaged area. The nest box should be sized and designed for the species of woodpecker that is causing the damage (Appendix A). All nest boxes should be made so that a panel can be lifted to clean out the box. This will allow you to remove undesirable species such as the European Starling and the House Sparrow, both introduced species. Aggressive starlings can chase even large woodpeckers away.

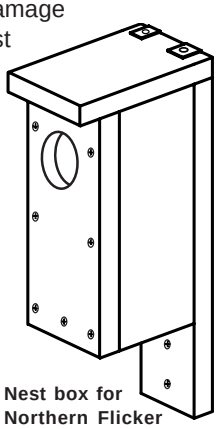

Nest box for Northern Flicker (Appendix A).

Kas Dumroese, a research associate with the University of Idaho's Forest Research Nursery, suggests that nest boxes for Northern Flickers should be constructed of 2 by 8's, one wide, one deep, with a 3-inch hole about 3 inches from the top. Total depth of the nest box should be about 18 inches. Adding wood chips or shavings to the bottom can encourage nesting.

Feeding

Woodpeckers may be attracted to buildings to feed on insect larvae. Voids in a building's siding provide excellent insect nesting sites and hiding places. This is especially true of plywood siding. The siding has routed groves that expose voids in the plywood layers, making them a natural nesting site for insects. Lap siding that is not nailed down tightly can provide voids for insects. Also as flat-grained boards (sawed tangent to the growth rings) age and dry, the growth rings tend to separate from the rest of the wood, providing an opening for insects (Figure 5). Damage caused when woodpeckers feed on insect larvae can usually be identified by rows of cone-shaped holes (Figure 6) and is more common in plywood siding or near the edge of lap siding.

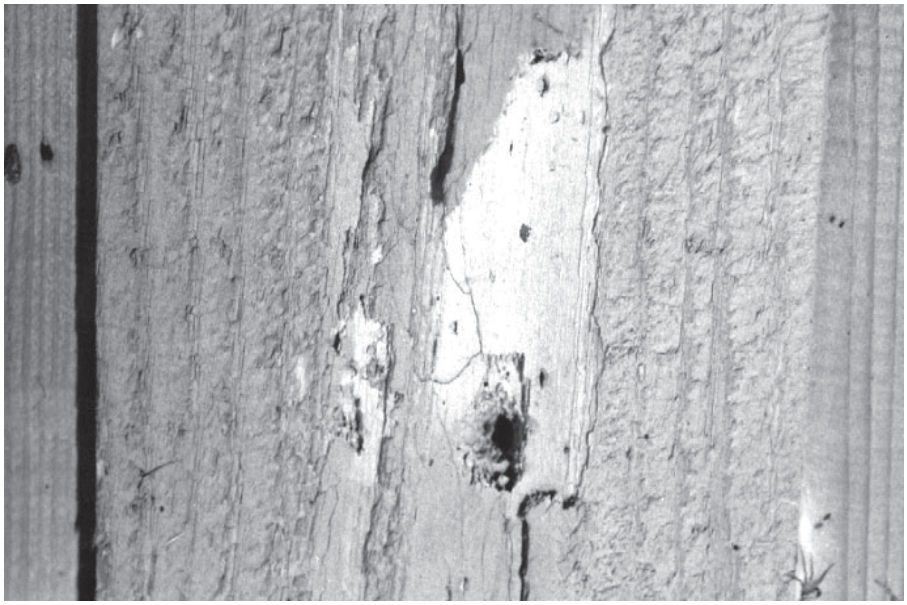

Figure 5—When growth rings separate from the rest of the wood, insects can enter a building's siding. Woodpeckers damage the siding when they feed on the insects.

Figure 6—Woodpeckers leave rows of cone-shaped holes when they feed on insect larvae in wood siding.

Solving Problems Related to Feeding

Insect nests can sometimes be destroyed by using a long stiff wire to poke through the voids in the plywood. After the larvae have been killed, the entry should be caulked shut. Repair the damage and make the repair look like the rest of the building.

Typically, woodpeckers will not spend energy looking for insects in a sound building. The way to prevent foraging woodpeckers from damaging buildings is to protect the wood from insects. Regularly protecting the wood with a sealer will discourage most insects.

Roofs made from wooden shakes or shingles can be replaced with tin. Metal roofs will eliminate nesting and hiding places for insects. They will also help protect the building from fire.

Drumming

Drumming is probably more of a nuisance than a source of potential damage. Woodpeckers drum to defend their territories or attract mates. Wood siding, rain gutters, down spouts, or other metal surfaces on a building provide ideal drumming surfaces for woodpeckers. Little can be done to reduce the loud sound produced as woodpeckers drum on these surfaces.

Solving Problems Related to Drumming

One solution may be to construct an alternate drumming site away from residences. A drum can be made by using two overlapping boards. Secure the end of one board to the tree. Cover the end of the other board with sheet metal. Another possibility would be to secure a metal cylinder, such as a gutter downspout, to a tree.

Other Possible Solutions

Many devices are available to scare birds away. They include hawk silhouettes, pinwheels, mirrors, reflective ribbon, and reflective holographic ribbon. Most of these are highly visible reflective devices that move with the wind. Any one of these devices may work some of the time, but none work all of the time. The sooner these devices are tried after detecting the problem, the better the chances of success.

Some sound devices play recorded bird distress cries or the cry of hawks. Others produce ultrasonic sound waves that people cannot hear. Managers may buy some time by using scare tactics, but these methods usually only work for short periods of time until the bird has grown accustomed to them.

See the *References* section for other resources that may help you solve your problems.

Repairing Damage Caused by Woodpeckers

To repair a hole, cover it from the inside by securing a board to the siding. Cut a plug the same size as the hole from the same material as the siding. Make sure it is the same thickness. Secure the plug to the board behind the hole. Fill the gap around the plug and any adjacent damage with caulk. Finish the repair to match the existing siding.

If there is no access to the back side of the hole, or if looks are a consideration, use techniques similar to those used when patching drywall. Reshape the hole into a rectangle with the desired dimensions and cut it out using a keyhole or reciprocating saw. **Caution: Electrical wiring or plumbing may be under the board.** Secure two cleats to the siding inside the opening, one opposite the other, so the plug cannot slip through. Cut the plug from a piece of siding that matches the grain, texture, and thickness of the siding, oriented so the grain matches the grain around the hole. Cut the plug to the same dimensions as the hole, allowing for the saw kerf on each side. Secure the plug to the cleats, caulk any gaps around the edges, and finish the repair to match the existing siding.

Another approach would be to saw two opposite sides of the opening on a bevel when reshaping the hole. The plug would be cut to match the bevel. These bevels would provide the surface the plug would be secured to. Fill small, cone-shaped holes with caulk. Texture and finish the repair to match the existing siding.

If damage is extensive, the siding may have to be replaced or covered with a more durable product such as siding made from steel, aluminum, or plastic. These materials are generally more resistant to damage. If new construction is planned near an area with woodpecker problems, one of these materials should be considered, rather than rough-sawed plywood or other wooden siding.

References

Adler, Bill, Jr. 1992. Outwitting Critters. New York: The Lyons Press. 256 p.

American Plywood Association. 1980. Woodpecker damage to wood. Form No. E480. Tacoma, WA: American Plywood Association.

Beebe, Spencer B. 1974. Relationships between insectivorous hole-nesting birds and forest management. New Haven: Yale University School of Forestry and Environmental Studies. 49 p.

Bull, Evelyn L.; Partridge, Arthur D. 1986. Methods of killing trees for use by cavity nesters. Wildlife Society Bulletin 14:142–146.

Bull, E.L.; Parks, Catherine G.; Torgersen, Torolf R. 1997. Trees and logs important to wildlife in the interior Columbia River Basin. Gen. Tech. Rep. PNW-GTR-391. Portland, OR: U.S. Department of Agriculture, Forest Service, Pacific Northwest Research Station. 55 p.

Conner, Richard N.; Hooper, Robert G.; Crawford, Hewlette S.; Mosby, Henry S. 1975. Woodpecker nesting habitat in cut and uncut woodlands in Virginia. Journal of Wildlife Management 39 (1): 144–150.

Conner, Richard N.; Miller, Orson K., Jr.; Adkisson, Curtis S. 1976. Woodpecker dependence on trees infected by fungal heart rots. Wilson Bulletin 88 (4): 575–581.

Conner, Richard N. 1978. Snag management for cavity nesting birds. In: Proceedings of the workshop: management of southern forests for nongame birds. Gen. Tech. Rep. SE-14. U.S. Department of Agriculture, Forest Service: 120–128.

Conner, Richard N.; Dickson, J.G.; Williamson, J.H. 1983. Potential woodpecker nest trees through artificial inoculation of heart rots. In: Proceedings of the symposium: snag habitat management. Gen. Tech. Rep.-RM-99. U.S. Department of Agriculture, Forest Service, Rocky Mountain Research Station: 68–72.

Craven, Scott. 1997. Controlling woodpecker damage. Bull. No. G3117. Madison, WI: University of Wisconsin-Madison, Department of Natural Resources.

Lewis, Jeffrey C. 1998. Creating snags and wildlife tree trees in commercial forest lands. Western Journal of Applied Forestry 13 (3): 97–101.

Marsh, Rex E. 1994. Woodpeckers. In: Prevention and control of wildlife damage. Lincoln, NE: Cooperative Extension Division, Institute of Agriculture and Natural Resources, University of Nebraska. E-139–E-145

Miller, E.; Miller, D.R. 1980. Snag use by birds. In: DeGraaf, R.M. (tech. ed.). Proceedings of the workshop: management for nongame birds. Gen. Tech. Rep. INT-86. U.S. Department of Agriculture, Forest Service, Intermountain Research Station: 337–356.

Moore, A.D. 1945. Winter night habits of birds. Wilson Bulletin 57: 253–260.

Otvos, Imre S. 1979. The effects of insectivorous bird activities in forest ecosystems: an evaluation. In: The role of insectivorous birds in forest ecosystems. New York: Academic Press, Inc.: 341–374.

Parks, Catherine G.; Bull, Evelyn L.; Filip, Gregory M. 1996. Using artificially inoculated decay fungi to create wildlife habitat. In Bradford, Peter; Manning, Todd; l'Anson, Bill, eds. Wildlife tree/stand-level biodiversity workshop proceedings; 1995 October 17-18; Victoria, BC. Victoria, BC: British Columbia Environment: 87–89.

Stokes, Donald W.; Stokes, Lillian. 1990. The complete birdhouse book: the easy guide to attracting birds. New York: Little, Brown, and Company. 95 p.

Thomas, Jack W.; Anderson, Ralph G.; Maser, Chris.; Bull, Evelyn L. Snags.1979. In: Wildlife habitats in managed forests—the Blue Mountains of Oregon and Washington. Agric. Handb. 553. Washington, DC: U.S. Department of Agriculture: 60–77.

World Wide Web Homepages

Nest Boxes

http://www.nestbox.com
http://www.bcpl.lib.md.us/~tross/by/house.html

Scare Devices/Barriers/Repellents

http://www.bird-x.com
http://www.birdbarrier.com
http://www.vsf24.com

General Information on Woodpeckers

http://www.msue.msu.edu/genesee/natres/woodpeck.htm
http://www.ipm.iastate.edu/ipm/iiin/woodpeck.html
http://www.bcpl.lib.md.us/~tross/by/byprob.html
http://www.colostate.edu/depts/CoopExt/PUBS/NATRES/06516.html
http://hammock.ifas.ufl.edu/txt/fairs/17040
http://ag.arizona.edu/pito/pdf/apjul98a.pdf
http://www.msue.msu.edu/msue/imp/mod03/01701333.html

Appendix A—Drawings for a Northern Flicker Nest Box

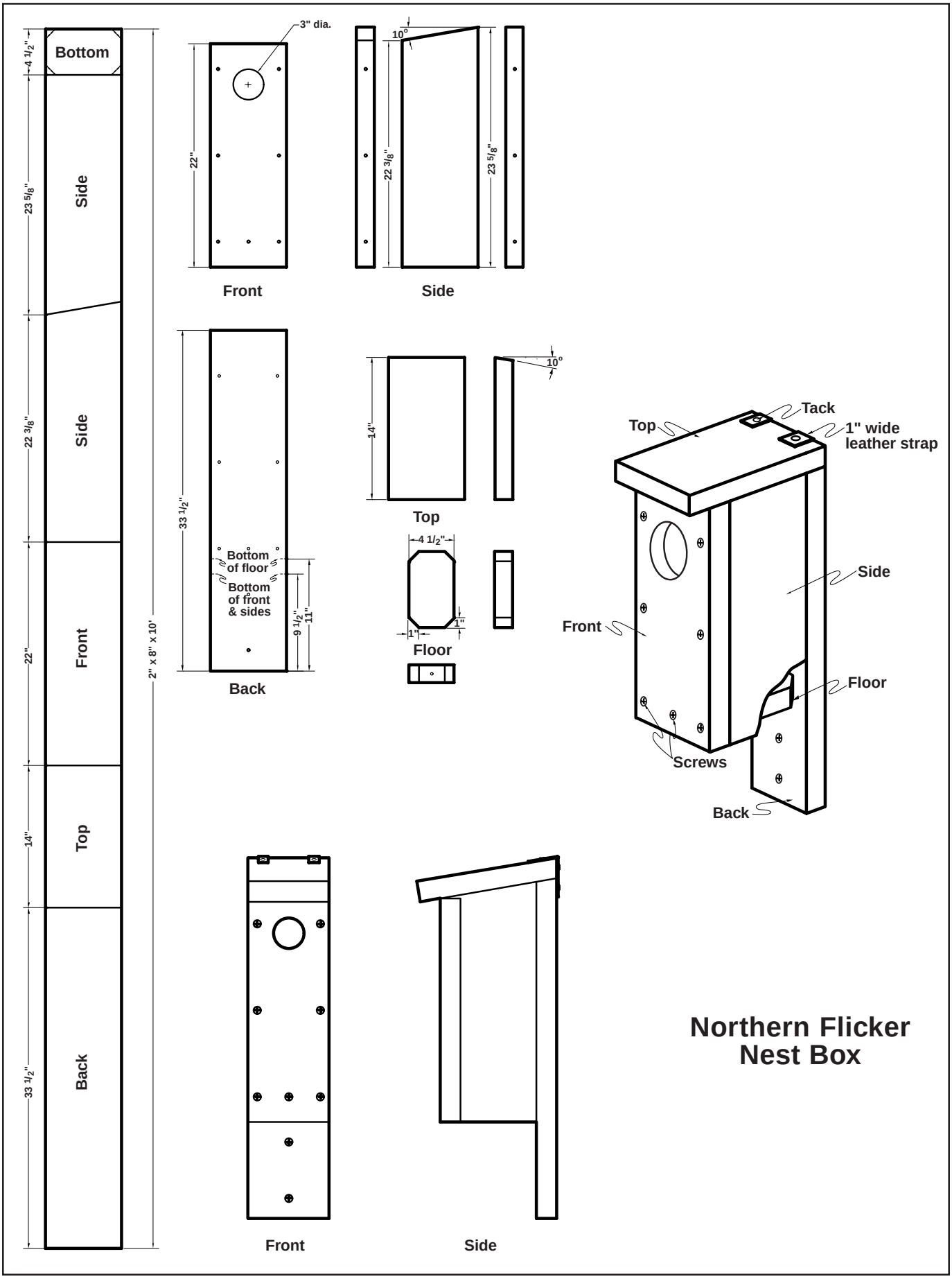
Bottom
4 1/2"
Side
23 5/8"
Side
22 3/8"
Front
22"
Top
14"
Back
33 1/2"
2" x 8" x 10'
3" dia.
22"
Front
10°
22 3/8"
23 5/8"
Side
33 1/2"
Bottom of floor
Bottom of front & sides
9 1/2"
11"
Back
14"
10°
Top
4 1/2"
1"
1"
Floor
Tack
Top
1" wide leather strap
Side
Front
Floor
Screws
Back
Front
Side
Northern Flicker Nest Box

About the Authors…

Tony Jasumback, now retired, was a Senior Project Engineer working on projects in the Forest Health Protection, Engineering, Fire and Aviation, and Reforestation and Nurseries Programs. He received a Bachelor of Science degree in mechanical engineering from the University of Missouri at Rolla in 1961. He joined the Forest Service in 1963, working for the Architecture Department in the Northern Region (R1) and later for the Colville National Forest in road design. He came to MTDC in 1965 as a design and test engineer, retiring in 2000.

Lisa Bate is a cooperative Research Associate with the University of Idaho and the Forest Service's Pacific Northwest Research Station, living in Kalispell, MT. She received a master's degree in wildlife resources from the University of Idaho at Moscow in 1995. She has been working with woodpeckers and their habitat since 1992.

Steve Oravetz graduated from the University of Washington in Civil Engineering and is a licensed Professional Civil Engineer. He began his career on the Wenatchee National Forest in 1980. He became Chief Engineer for the Northeastern Research Station in 1993. In 1996, he became Engineering Program Leader at MTDC.

Library Card

Jasumback, Tony; Bate, Lisa; Oravetz, Steve. 1999. How to prevent woodpeckers from damaging buildings. Rep. 0071-2847-MTDC. Missoula, MT: U.S. Department of Agriculture, Forest Service, Missoula Technology and Development Center. 10 p.

Describes techniques that can be used to try to reduce the damage woodpeckers cause to Forest Service facilities. Discusses ways in which facilities managers can provide snags that woodpeckers can use for nesting, reducing their need to use buildings for nest sites. An appendix contains plans for a Northern Flicker nest box. Another appendix includes a print of a 1994 report addressing damage caused by woodpeckers.

Keywords: bird control, bird repellents, bird scarers, buildings, facilities, maintenance, nest boxes

Additional single copies of this document may be ordered from:

USDA Forest Service
Missoula Technology and Development Center
5785 Hwy. 10 West
Missoula, MT 59808-9361
Phone: 406–329–3900
FAX: 406–329–3719
Internet: wo_mtdc_pubs@fs.fed.us

For further technical information, please contact Steve Oravetz at the address above.

Phone: 406–329–1037
Fax: 406–329–3719
Internet: soravetz@fs.fed.us
Lotus Notes: Steve Oravetz/WO/USDAFS

An electronic copy of this document is available on the Forest Service's FSWeb Intranet at:

http://fsweb.mtdc.wo.fs.fed.us