Transportation Management
Tech Tips

United States Department of Agriculture
Forest Service
Technology & Development Program
October 2003
7700 0377 1310—SDTDC

THE OUTBACK™ SAVANNAH ROAD GRADER

Leo Ruiz, Civil Engineer
Tony Edwards, Civil Engineer

PURPOSE

The purpose of the Tech Tip is to report on demonstrations of the Outback™ Savannah Road Grader and its possible applications for the U.S. Department of Agriculture (USDA) Forest Service.

OVERVIEW

In November 2002, engineers from the San Dimas Technology and Development Center (SDTDC) met in Tallahassee, FL, to evaluate Outback Savannah Road Graders owned by Federal and county agencies.

The grader appeared to be affordable and easy to use for light maintenance. The grader, however, cannot reconstruct roads, pull ditches, or perform heavy maintenance.

OUTBACK SAVANNAH ROAD GRADER

The high-speed Outback Savannah Road Grader was developed by the Savannah Company (figure 1). It has a hydraulic-relief system, a remote control, and a three-in-one operation that windrows, finish-blades, and compacts. The trailer-mounted highway-rated grader can be pulled by most tractors (100-horsepower recommended), heavy equipment, or heavy-duty trucks.

Three-in-One Operation

Scarifying blades

Five scarifying blades are on the front of the machine (figure 2). These blades cut through roadway erosion such as corrugated washboarding patterns, wheel ruts, potholes, and washouts

Figure 1—Outback™ Savannah Road Grader.

Figure 2—Scarifying blade.

For additional information, contact: Transportation Management Program Leader, San Dimas Technology & Development Center, 444 East Bonita Avenue, San Dimas CA 91773–3198; Phone: 909–599–1267; TDD: 909–599–2357; FAX: 909–592–2309
Lotus Notes: Mailroom WO SDTDC@FSNOTES • Intranet (web site): http://fsweb.sdtdc.wo.fs.fed.us • Internet e-mail: mailroom_wo_sdtdc@fs.fed.us

(figure 3). The reversible and double-sided blades are available in high-strength steel tipped with tungsten carbide. Angles can be set to 40, 25, 0, -25, or -40 degrees by manually pulling a pin and rotating the blade (figures 4 and 5).

Figure 3—Scarifying blade.

Figure 4—Rotating blade to adjust angle.

Figure 5—Pulling pin to adjust angle.

Finish blading

Two fixed-in-position finishing blades are located side by side. The hydraulic reliever allows one blade to lift over an obstruction while the other blade remains in contact with the ground. Hydraulics tilt the trailer frame to maintain up to a 5-percent crown in the road.

Compacting

The grader has eight pneumatic compaction tires that roll the surface after grading (figure 6). The grader weighs 5,000 pounds dry, 6,300 pounds with a full water ballast tank, and 7,800 pounds with an added counterweight.

Figure 6—Compacting tires and weight.

Hydraulic System and Controls

A hydraulic relief mechanism allows the scarifying and finishing blades to glide over obstructions. After the blade clears an obstruction, the hydraulic pressure immediately pushes the blade back into the grading position (figures 7, 8, 9, and 10), protecting the grader from damage and improving operator comfort.

The operator controls the grader with a hand-held controller from the cab of the tow vehicle (figure 11). The operator also can adjust the pressure at which the relieving action engages.

Figure 7—Elevation showing boulder top in road.

Figure 8—Grader at work.

Figure 9—Blade hydraulic system absorbing the impact of boulder.

Figure 10—Notice how offcenter the blade is when taking the impact.

Figure 11—Hand-held controller.

Towing

The grader has a 10-ton-rated swivel hook that accommodates a variety of tow vehicles (figure 12). A pintle hook, a 2-inch ball with a lock-down top latch, or a tractor-type drawbar is required. The grader can be pulled by a heavy-duty truck at normal highway speeds to and from jobsites (figure 13).

Figure 12—Grader pulled by a tractor.

Figure 13—Grader pulled by a heavy-duty truck.

Benefits

The benefits of the grader are:

- Lower initial cost—$40,000, plus a suitable tow vehicle.
- Lower fuel costs—most motorgraders use 7 to 8 gallons of diesel fuel per hour of grading. A large truck pulling the grader uses about 4 gallons of fuel per hour.
- Operational benefits—minimum training is required.

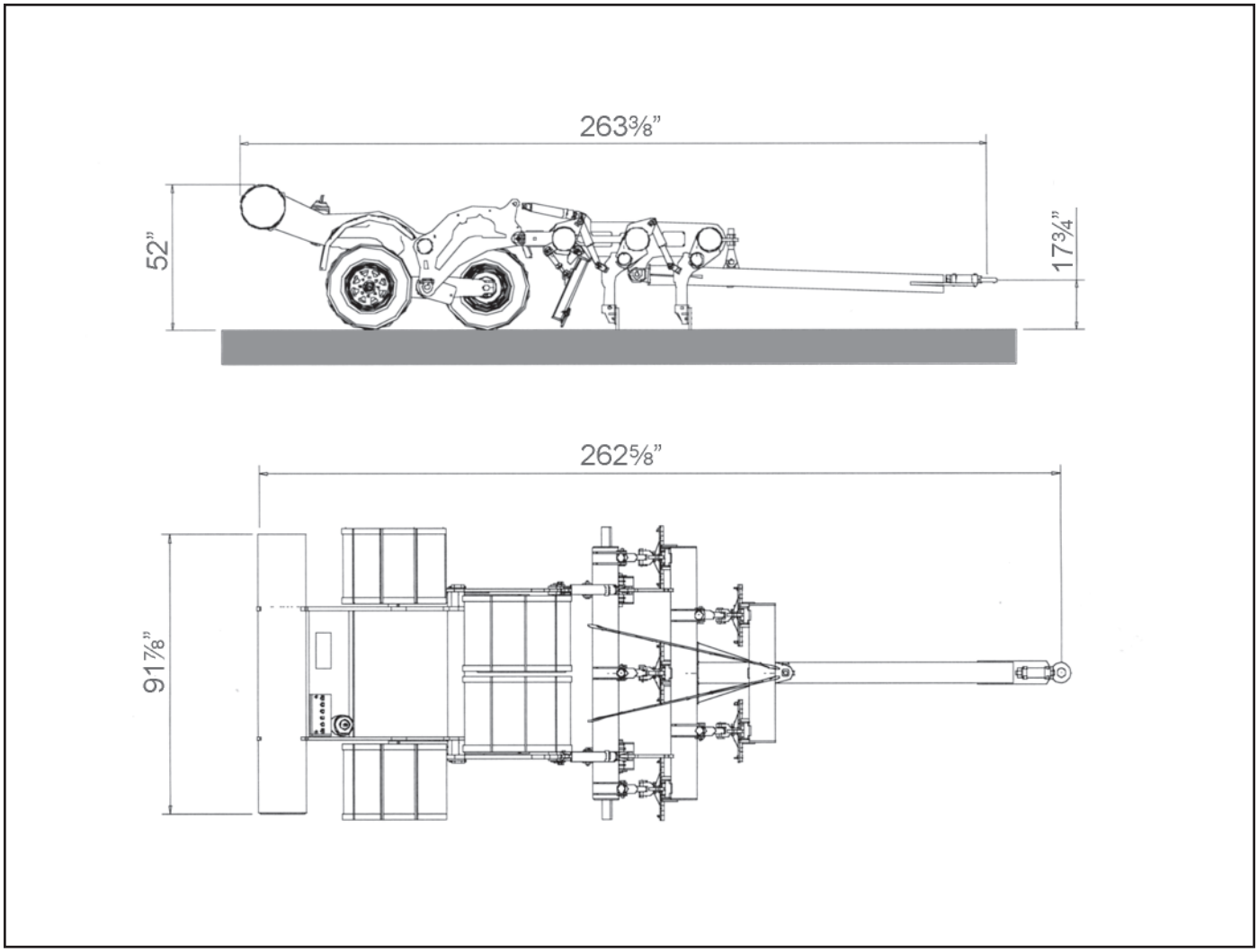

Figure 14—Specification drawings.

Specifications

The specifications for the grader are:

- Five scarifying blades. Tungsten hardfacing (optional).
- Two finishing blades.
- Eight pneumatic compaction tires.
- Two 2-1/2-inch by 8-inch lift cylinders, five 2-inch by 6-inch hydraulic displacement cylinders, and two 1-1/2-inch by 4-inch hydraulic displacement cylinders.
- Hydraulic manifold, including a pressure relief valve and gauge.
- 1-gallon nitrogen accumulator.
- 12-volt heavy-duty battery.
- 12-volt dc electric/hydraulic power rack.
- Hydraulic safety valve to prevent accidental lowering of the machine during transport.
- Road registration kit, including trailer brakes and grader brakes, and tail, indicator, and clearance lights.
- Mudguards for compaction tires.
- Remote control cable with toggle switch and battery connections.
- Weight: 5,000 pounds dry, 6,300 pounds with full water ballast tank, and 7,800 pounds with added counterweight.

SUMMARY
The Outback Savannah Road Grader provides an additional option for land managers who maintain access on native and aggregate road surfaces. The user-friendly, trailer-mounted equipment lets more employees help with light road maintenance.

For further information on the Outback™ Savannah Road Grader contact Leo Ruiz, SDTDC project leader, by phone at 909–599–1267, ext. 258, or by e-mail at lruiz@fs.fed.us; Tony Edwards, SDTDC project leader, by phone at 909–599–1267, ext. 235, or by e-mail at aedwards@fs.fed.us; or Randy E. King, Wildlife Technician, Division of Wildlife Aucilla/Flintrock, Florida Fish and Wildlife Conservation Commission, by phone at 850–342–0043.

Information contained in this document has been developed for the guidance of employees of the U.S. Department of Agriculture (USDA) Forest Service, its contractors, and cooperating Federal and State agencies. The USDA Forest Service assumes no responsibility for the interpretation or use of this information by other than its own employees. The use of trade, firm, or corporation names is for the information and convenience of the reader. Such use does not constitute an official evaluation, conclusion, recommendation, endorsement, or approval of any product or service to the exclusion of others that may be suitable.

The U.S. Department of Agriculture (USDA) prohibits discrimination in all its programs and activities on the basis of race, color, national origin, sex, religion, age, disability, political beliefs, sexual orientation, or marital or family status. (Not all prohibited bases apply to all programs.) Persons with disabilities who require alternative means for communication of program information (Braille, large print, audiotape, etc.) should contact USDA's TARGET Center at (202) 720-2600 (voice and TDD).

To file a complaint of discrimination, write USDA, Director, Office of Civil Rights, Room 326-W, Whitten Building, 1400 Independence Avenue, SW, Washington, D.C. 20250-9410 or call (202) 720-5964 (voice and TDD). USDA is an equal opportunity provider and employer.