VELVET CREEK

Site Information

Site Location: Coast Range, S Willamette Valley, Siuslaw NF Rd 32

Year Installed: 1981

Lat/Long: 123°48'25.67"W
44°5'55.33"N

Watershed Area (mi²): 1.81

Stream Slope (ft/ft)[1]: 0.013

Channel Type: Pool-riffle

Bankfull Width (ft): 24

Survey Date: March 5 2007

[1]*Water surface slope extending up to 20 channel widths up and downstream of crossing.*

Culvert Information

Culvert Type: Open-bottom arch

Culvert Material: Annular CMP

Culvert Width: 16

Outlet Type: Mitered

Culvert Length: 93

Inlet Type: Mitered

Pipe Slope (structure slope): 0.016

Culvert Bed Slope: 0.011

(First hydraulic control upstream of inlet to first hydraulic control downstream of outlet.)

Culvert width as a percentage of bankfull width: 0.67

Alignment Conditions: Mostly inline with natural channel.

Bed Conditions: Material in culvert is gravels and cobbles and appears to be stream-transported and not placed. It is fairly well sorted by bedform type. Some scour to bedrock (sandstone) is present at upstream end of culvert.

Pipe Condition: Good condition. Minor rust.

Hydrology

Discharge (cfs) for indicated recurrence interval

25% 2-yr	2-year	Q_{bf}[2]	5-year	10-year	50-year	100-year
35	140	160	208	256	366	414

[2]*Bankfull flow estimated by matching modeled water surface elevations to field-identified bankfull elevations.*

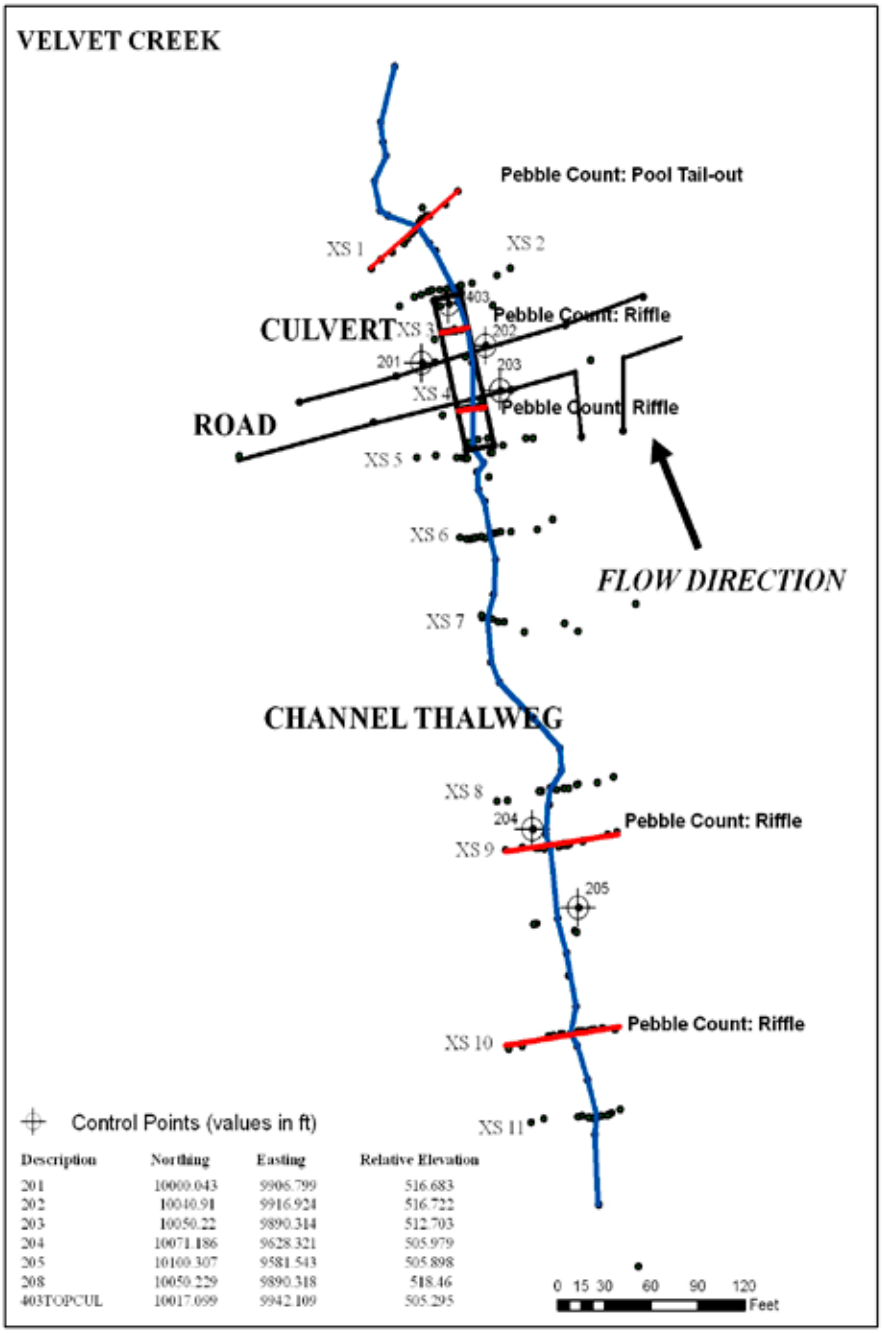

Description	Northing	Easting	Relative Elevation
201	10000.043	9906.799	516.683
202	10040.91	9916.924	516.722
203	10050.22	9890.314	512.703
204	10071.186	9628.321	505.979
205	10100.307	9581.543	505.898
208	10050.229	9890.318	518.46
403TOPCUL	10017.099	9942.109	505.295

Points represent survey points

Figure 1—Plan view map.

HISTORY

There is no information available for site history.

SITE DESCRIPTION

The Velvet Creek culvert is a bottomless arch pipe that is mitered to the roadfill. A pool through the inlet of the culvert transitions into a relatively homogenous riffle. Through the riffle, flow is concentrated along the right footing, but is also present along the left footing. There is moderate footing (stem wall) scour in both cases. There is also moderate scour down to sandstone bedrock at the culvert inlet. Bed material through the culvert was similar to that found along the rest of the channel.

The upstream representative reach had well-defined riffles composed of gravels and small cobbles, separated by two moderately deep pools. Fines were present within the pools and along the channel margins. The 25-foot-wide channel sits within a moderately confined valley with low, but narrow, active flood plain surfaces. Some vegetation from the banks extends into the channel adding roughness and providing cover.

SURVEY SUMMARY

Eleven cross sections and a longitudinal profile were surveyed along Velvet Creek in March 2007 to characterize the culvert and an upstream reference reach. No downstream reference reach was established due to the proximity of the crossing with the confluence of Indian Creek. In the culvert, reference sections were taken at the crest of the pool and through the riffle. One additional cross section was surveyed downstream of the culvert to characterize the outlet as well as the expansion of flow. Another two cross sections were surveyed upstream to characterize the inlet as well as the contraction of flow. Four cross sections were surveyed to characterize the upstream representative reach; one at the upstream and downstream boundary, one through a pool and one through a riffle. Additional cross sections were surveyed for modeling purposes between the upstream representative reach and the culvert.

PROFILE ANALYSIS SEGMENT SUMMARY

The profile analysis resulted in a total of nine profile segments. The culvert consisted of two profile segments, the upstream one extending into the inlet transition area. The upstream culvert segment was compared to one representative profile segment in the upstream channel. The downstream culvert segment was compared to two representative profile segments in the upstream channel. The upstream and downstream transition segments were each compared to two representative segments in the upstream channel. See figure 1 and tables 1 and 2.

SCOUR CONDITIONS

Observed conditions

Footing scour – There was no observed scour undermining footings or threatening structure integrity. There was, however, concentrated flow along both walls of the culvert.

Culvert-bed adjustment – The culvert bed shows some flattening of the profile based on comparisons of the bed to the slope of the structure itself (assuming the bed was originally constructed at the same gradient as the structure). This flattening appears to be mostly due to inlet scour within the upstream portion of the culvert. This inlet scour is primarily associated with the left bank at the inlet area, where an 18-foot-long by 9-foot-wide area within the pipe is scoured to the sandstone bedrock. The maximum footing (stem wall) exposed in this area is about 1.0 foot. In the lower portion of the culvert, the top of the stem wall is mostly level with the culvert bed. Material in culvert is gravels and cobbles and appears to be stream-transported and not placed.

Profile characteristics – The profile is generally uniform through the crossing, with only a slightly convex shape (figure 2). The slight convexity makes up the downstream three-quarters of the culvert bed. Sediment aggradation in this downstream portion combined with inlet scour and upstream incision extending approximately 100 feet may be creating the profile shape.

Residual depths – The single culvert residual depth is similar to the residual depth in the comparative slope segment (H) (figure 21). This suggests no significant scour beyond what is found in the channel outside of the crossing.

Substrate – Culvert bed material distributions do not differ substantially from the natural channel. Skewness values are lower in the culvert (table 7), but not by much when compared to the upstream representative reach downstream cross section. Sorting values are slightly less in the culvert than the natural channel but all locations can be considered poorly or very poorly sorted.

Predicted conditions

Cross-section characteristics – The culvert profile segments consists of one segment that lies completely within the pipe (B) and another that extends upstream of the inlet (C). As a result, segment C displays cross-section characteristics that are more similar to the channel outside the crossing. Therefore, for the discussions of cross-section characteristics the culvert conditions are considered those represented by segment B. For all cross-section metrics, the culvert exhibits conditions that diverge considerably from the representative channel segments (figures 5 through 9 and 12 through 17). Except for width-to-depth ratio, culvert conditions are generally similar to channel conditions at the 25 percent Q_2 but begin to diverge at greater flows. For the downstream transition (A), flow area is similar to the representative channel, but all other metrics show differences, especially at higher flows. The upstream transition shows greater accord with representative channel segments except for maximum depth. Width-to-depth ratio also has a much broader range in the upstream transition segment.

Shear stress – Shear stress in the downstream culvert segment (B) does not differ significantly from the representative segments (G and I) at all flows (figure 19). Culvert segment (C) also shows good accord with the representative segment (H). The upstream and downstream transitions also do not vary substantially from their representative profile segments outside of the crossing.

Excess shear – The excess-shear analysis suggests that the culvert has greater potential for bed mobilization than the representative channel. This is especially the case if we disregard the excess-shear value in the downstream reach, which may represent spurious results because of backwater effects of the downstream receiving stream on substrate conditions. Culvert excess-shear increases with respect to channel excess shear as flows increase due to increases in applied shear stress in the culvert as a result of greater culvert depths than channel depths at high flows.

Velocity – Velocity in the downstream culvert segment (B) is higher than representative channel segments (G and I) above the 25 percent Q_2 (figures 11 and 18). Velocity of culvert segment C and of the upstream and downstream transition segments is not substantially different than corresponding representative segments.

Scour summary

There is some scour at the inlet that is likely associated with the structure. Assuming the culvert bed was constructed at the same gradient as the structure, this scour has flattened the

channel bed through the crossing. The scoured inlet area has exposed bedrock that was not observed in the representative channel reach. The bedrock may be controlling additional scour or incision that may otherwise occur at the inlet and progress upstream. There is concentrated flow along the culvert walls, along the path of least roughness. Whereas this does not appear to be currently causing significant scour of the footings, over time this could compromise footing integrity. The similarity of bed-material distributions between the culvert and the channel suggests that the channel has reworked the material that was originally placed in the culvert, replacing it with sediment transported from upstream.

AOP CONDITIONS

Cross-section complexity – The sum of squared height differences in the culvert cross sections are both within the range of those in the channel cross sections (table 3).

Profile complexity – Vertical sinuosity in the culvert and transition segments are within the range of those in the channel segments (table 4).

Depth distribution – There is less channel margin habitat in the culvert compared to the channel at the 25 percent Q_2 (table 5).

Habitat units – The culvert has more glide habitat than the representative channel reach (table 6).

Residual depths – The single culvert residual depth is similar to the residual depth in the comparative slope segment (H) (figure 21). The upstream and downstream transitions have shallower residual depths than their corresponding channel segments.

Bed material – Culvert-bed material distributions do not differ substantially from the natural channel (table 7). A similar frequency of coarse particles (cobbles and boulders) suggests that substrate cover for fish would be similar between the culvert and the natural channel.

Large woody debris – There was no LWD present in the culvert (table 8). The representative channel had low wood quantities. LWD formed lateral scour pools in portions of the channel outside the crossing.

AOP summary

Culvert-bed complexity is similar to the natural channel; however, fish passage may be limited by a lack of shallow channel-margin habitat. The culvert also has glide habitat that is uncharacteristic of the pool-riffle habitat sequencing in the natural channel. The one residual depth in the culvert is similar to the natural channel but residual depths in transition segments are shallower and may be less ideal for velocity refuge during fish passage. Because of a lack of exposed banks during low flows (i.e., time of survey) terrestrial passage is considered poor.

DESIGN CONSIDERATIONS

The culvert could benefit from stable bank elements (i.e., large rocks) placed along the footings to protect footings, concentrate flows for low-flow passage (away from footings), and provide accessible banks for passage of terrestrial organisms. Stable bed elements (large cobbles and small boulders) near the inlet could provide scour resistance.

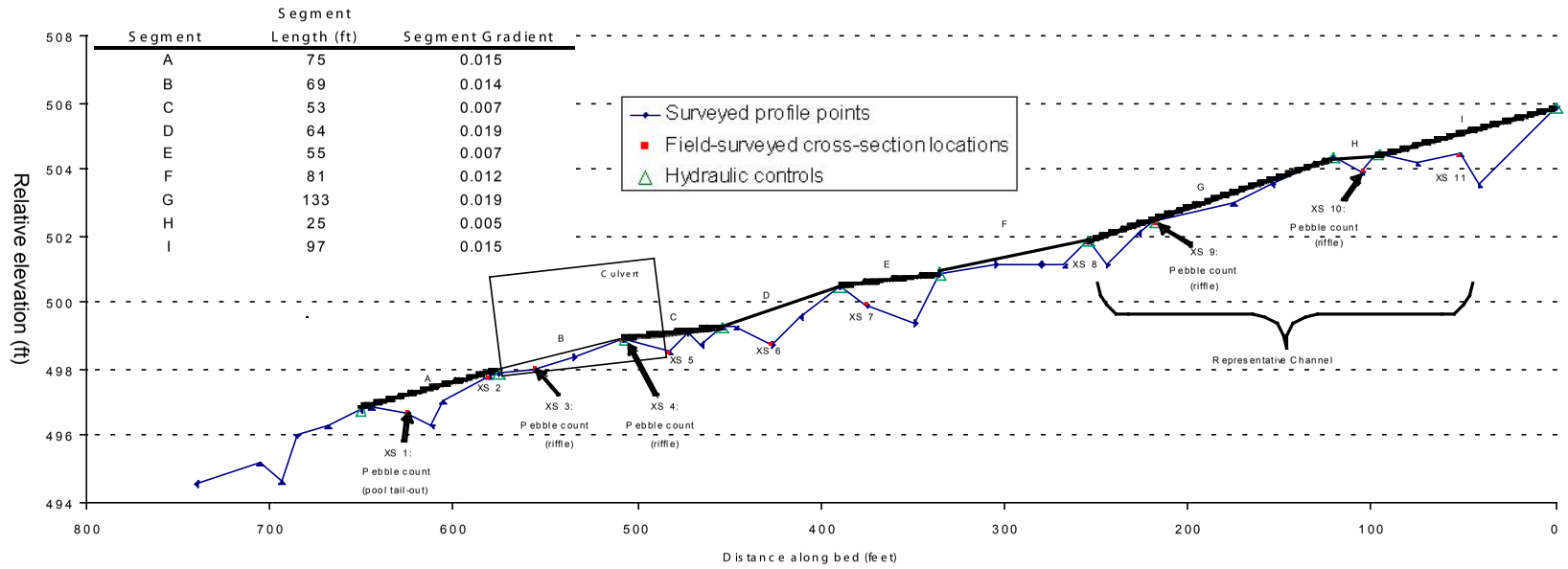

Figure 2—Velvet Creek longitudinal profile.

Table 1—Segment comparisons

Culvert Segment	Representative Channel Segment	% Difference in Gradient
B	G	31.5%
B	I	2.2%
C	H	34.6%
Upstream Transition		
D	G	1.6%
D	I	23.4%
Downstream Transition		
A	G	21.6%
A	I	0.8%

Table 2—Summary of segments used for comparisons

Segment	Range of Manning's n values[1]	# of measured XSs	# of interpolated XSs
A	0.0688-0.0759	2	8
B	0.0756-0.0759	2	5
C	0.0716-0.0763	2	6
D	0.0725-0.0793	1	7
G	0.0796-0.0810	1	10
H	0.0714-0.0796	1	3
I	0.0700-0.0749	1	11

[1]Obtained using equation from Jarrett (1984): n = 0.39S0.38R-0.16, where S=stream slope; R=hydraulic radius. Jarrett's equation only applied within the following ranges: S = 0.002 to 0.08, R = 0.5 ft to 7 ft. For cross sections outside these ranges, n was computed either from adjacent sections that fell within the ranges, using the guidance of Arcement and Schneider (1987), or from the HEC-RAS recommendations for culvert modeling.

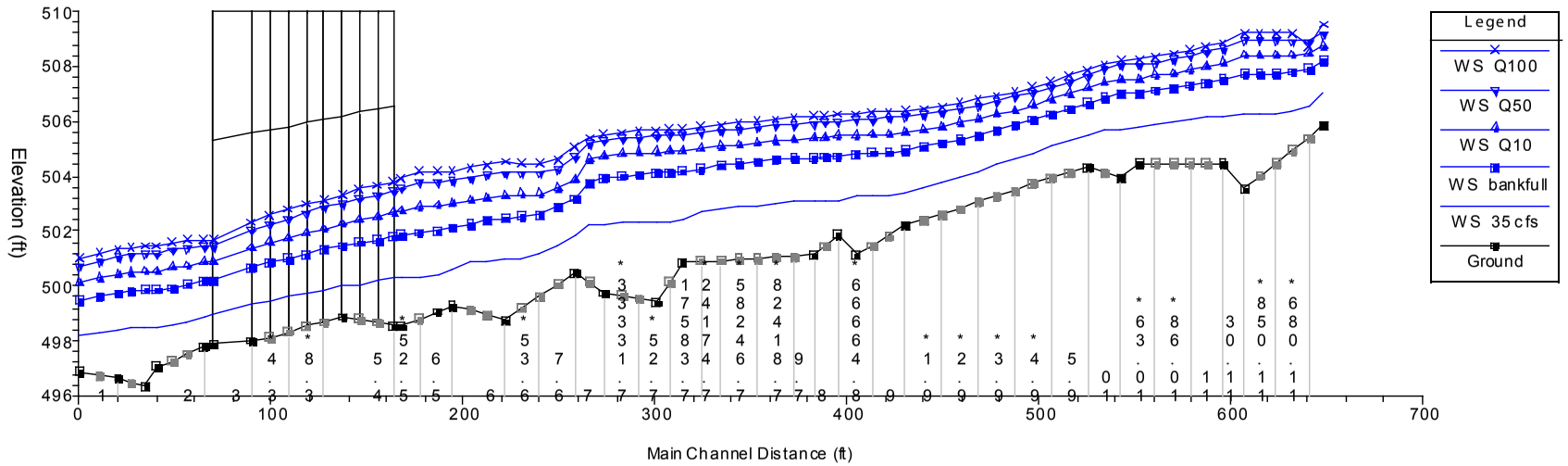

Stations with decimal values are interpolated cross sections placed along the surveyed profile.

Figure 3—HEC-RAS profile.

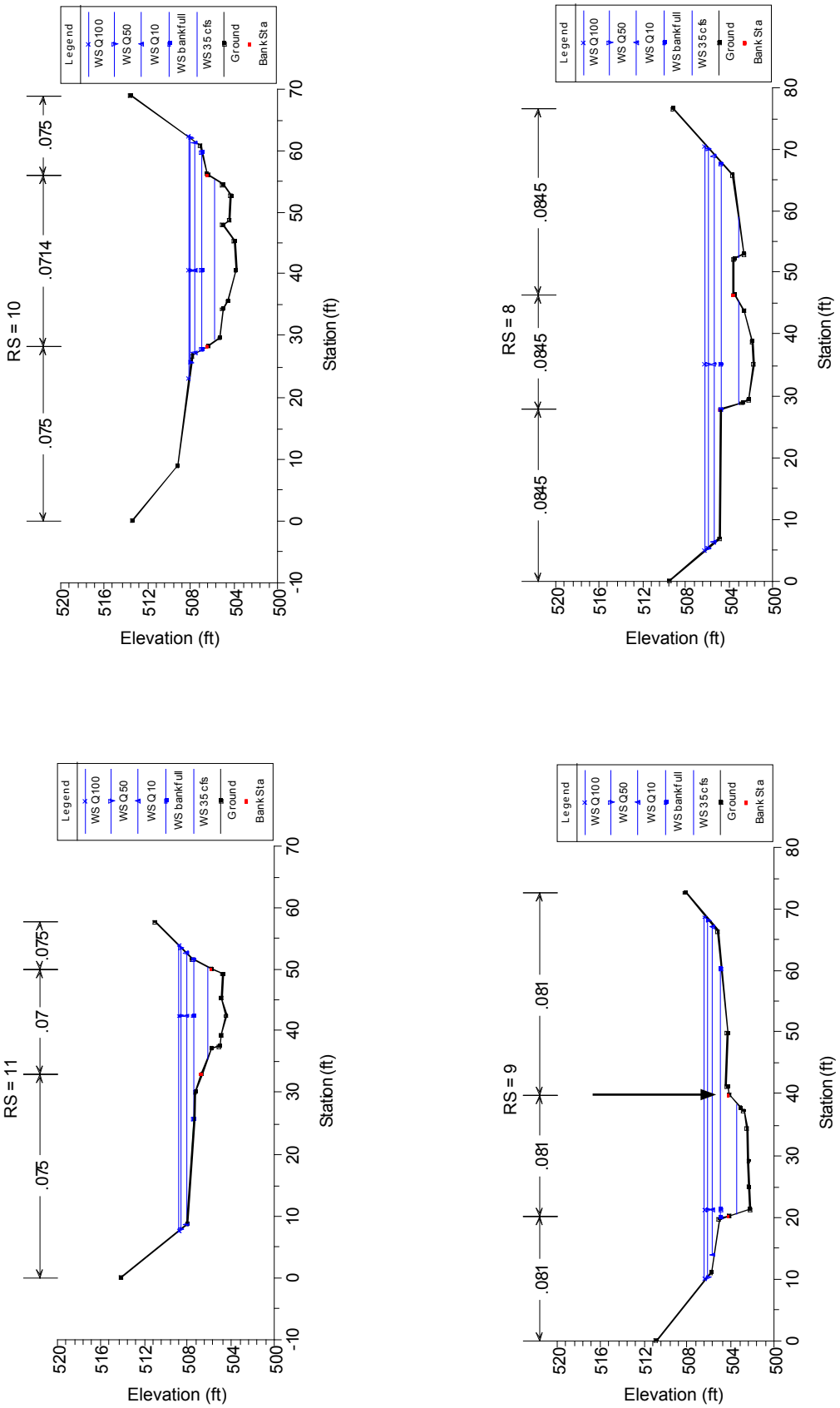

Figure 4—Cross-section plots. Only measured cross sections are included. Manning's n values are included at the top of the cross section. The stationing (RS) corresponds to the stationing on the HEC-RAS profile. Green arrows define the ineffective flow areas. Black arrows represent points identified in the field as the bankfull channel boundary. Only those points identified in the field and supported by hydraulic and topographic analyses are shown below.

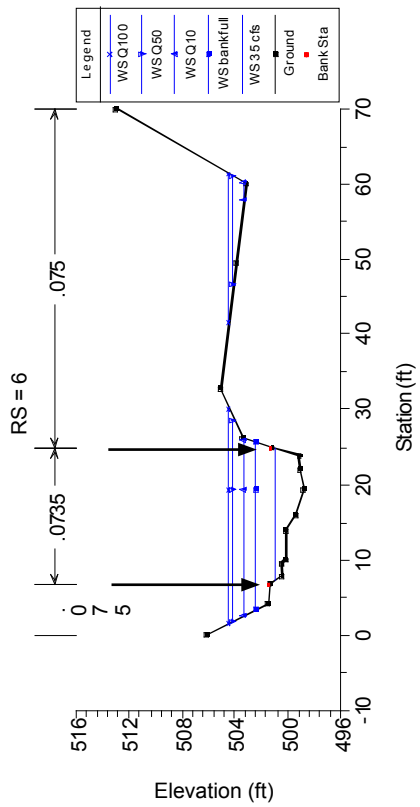

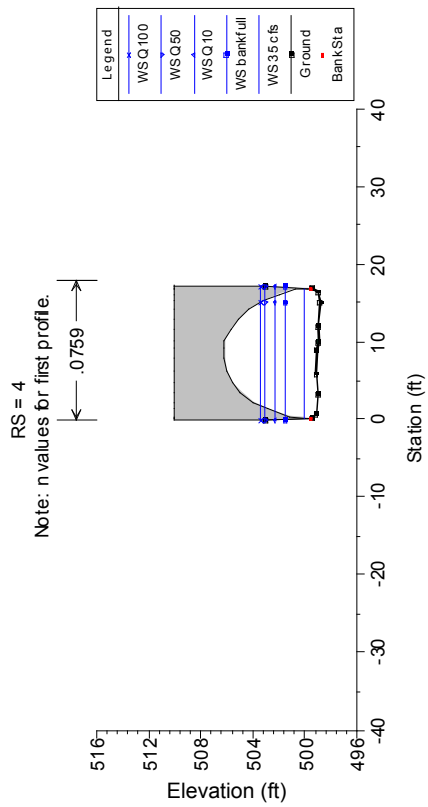

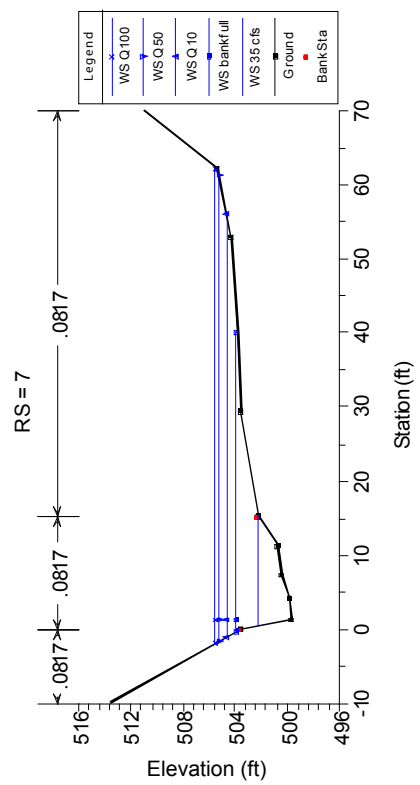

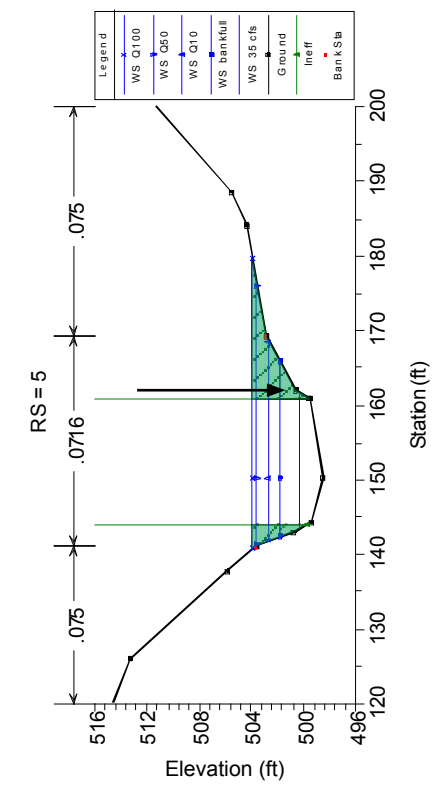

Figure 4—Cross-section plots. Only measured cross sections are included. Manning's n values are included at the top of the cross section. The stationing (RS) corresponds to the stationing on the HEC-RAS profile. Green arrows define the ineffective flow areas. Black arrows represent points identified in the field as the bankfull channel boundary. Only those points identified in the field and supported by hydraulic and topographic analyses are shown below.(continued)

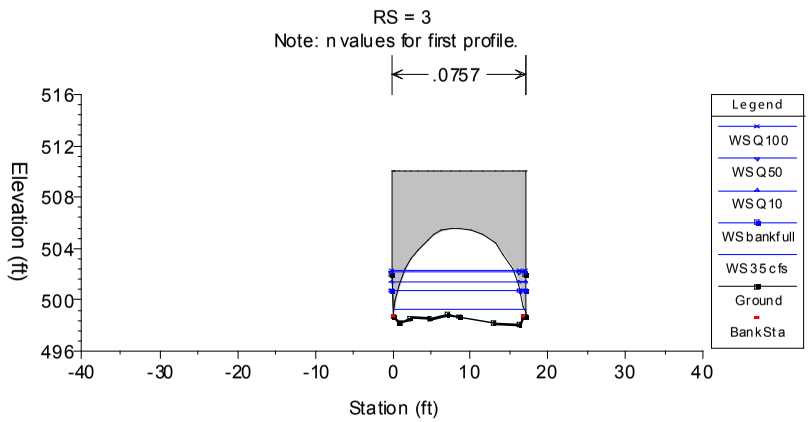

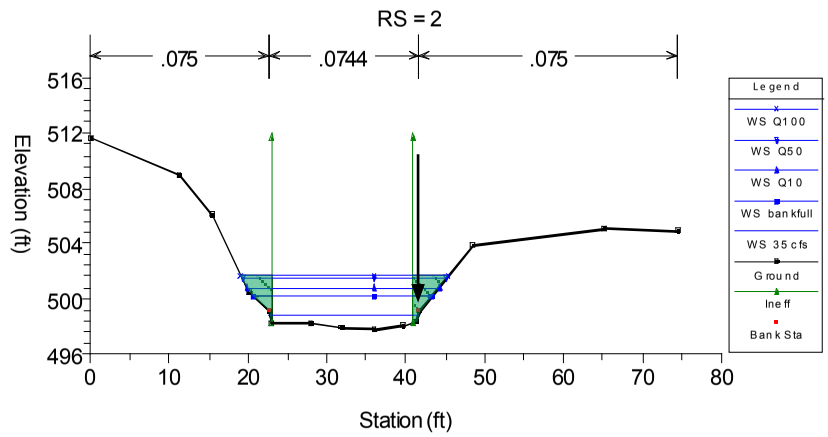

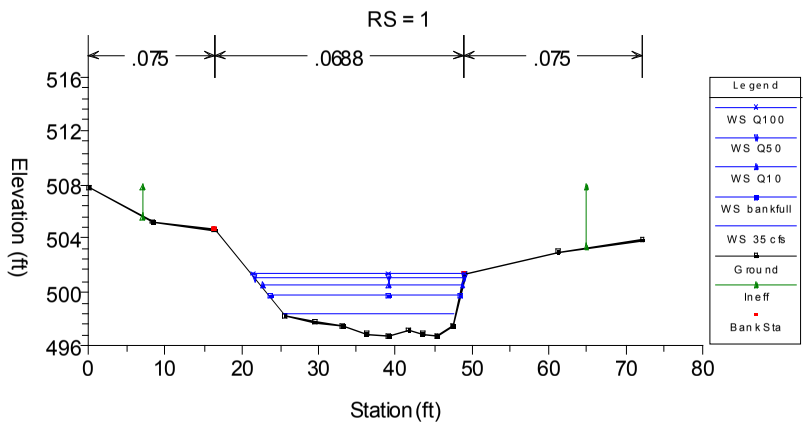

Figure 4—Cross section plots. Only measured cross-sections are included. Manning's n values are included at the top of the cross section. The stationing (RS) corresponds to the stationing on the HEC-RAS profile. Green arrows define the ineffective flow areas. Black arrows represent points identified in the field as the bankfull channel boundary. Only those points identified in the field and supported by hydraulic and topographic analyses are shown below. (continued)

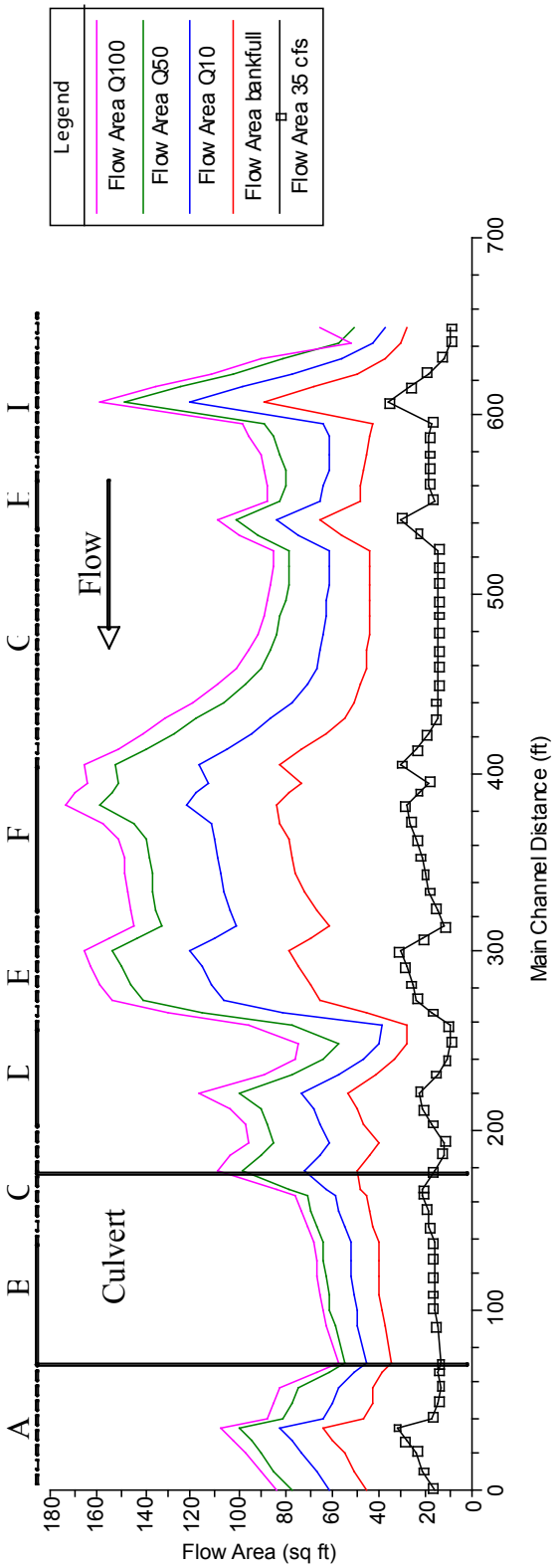

Figure 5—Flow area (total) profile plot.

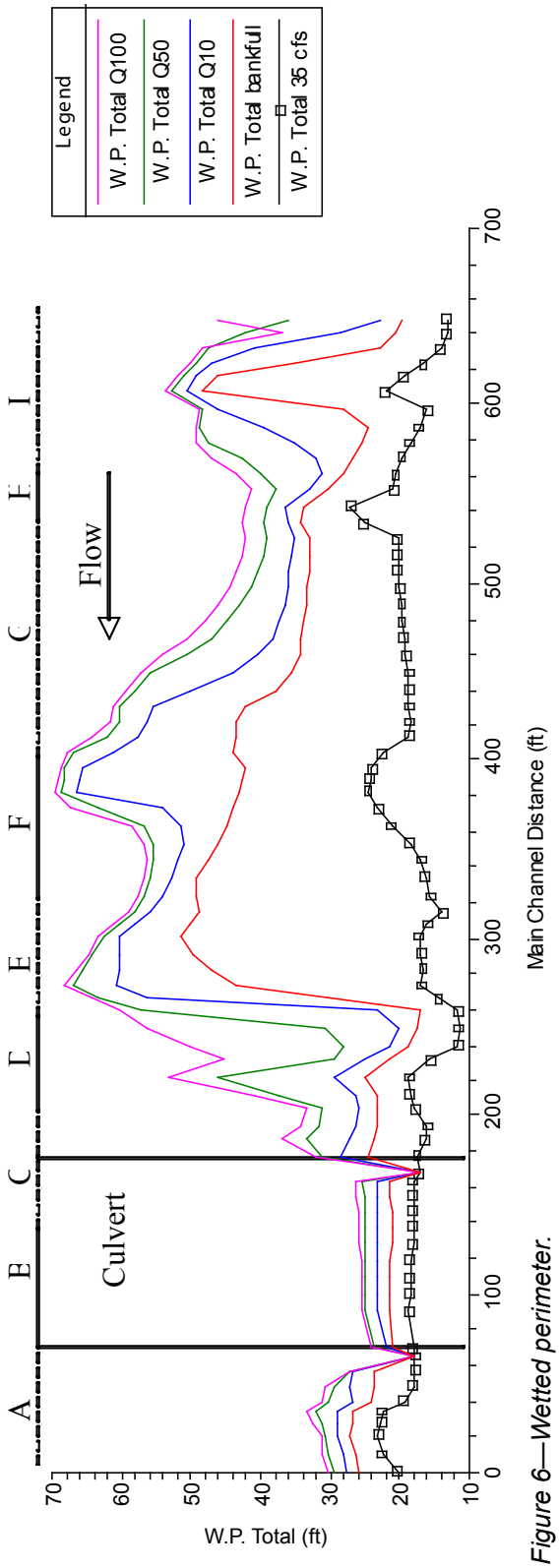

Figure 6—Wetted perimeter.

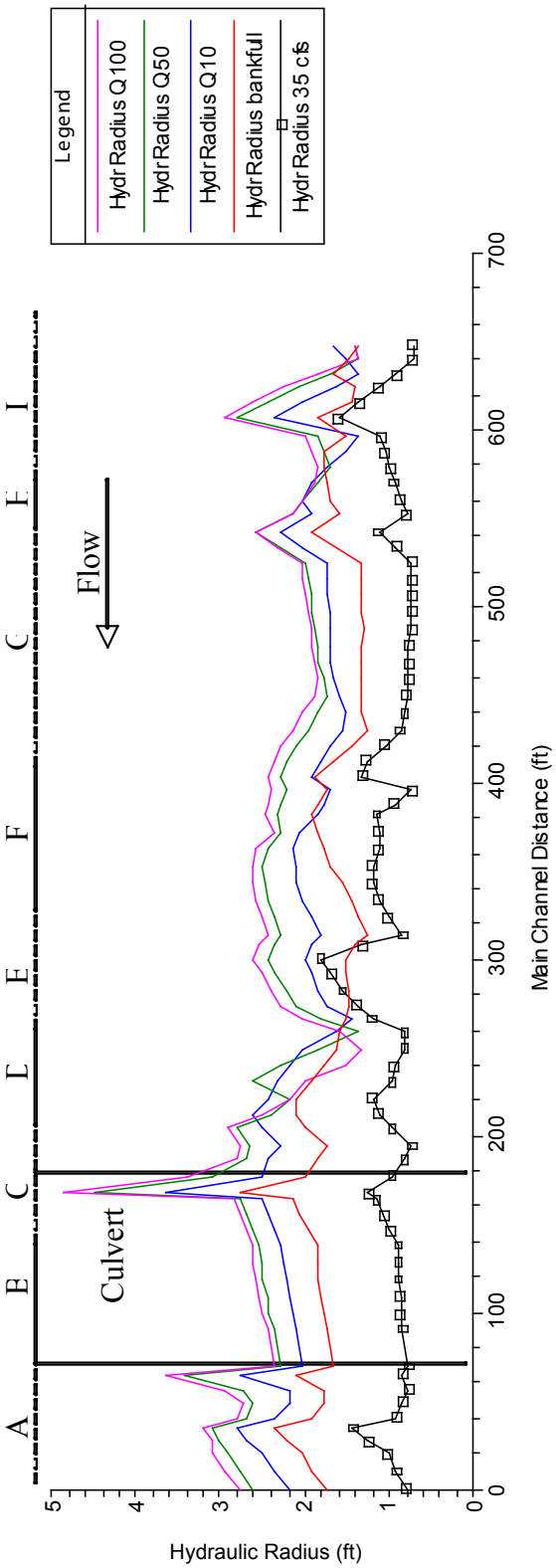

Figure 7—Hydraulic radius.

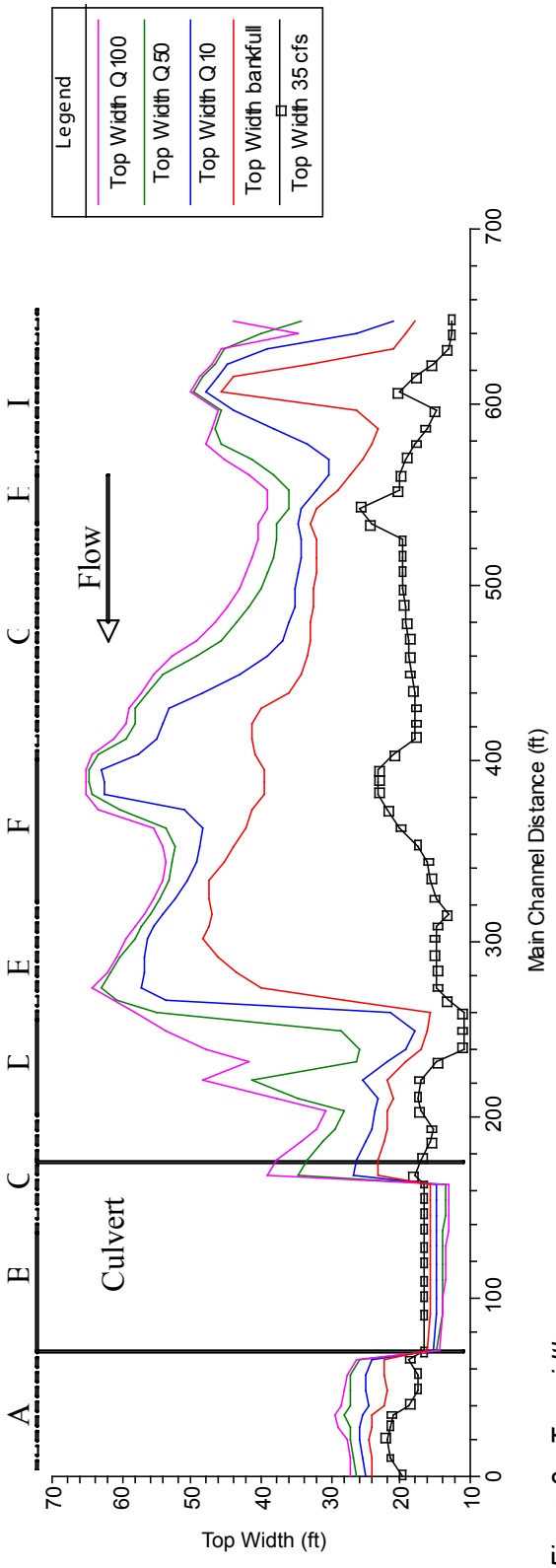

Figure 8—Top width.

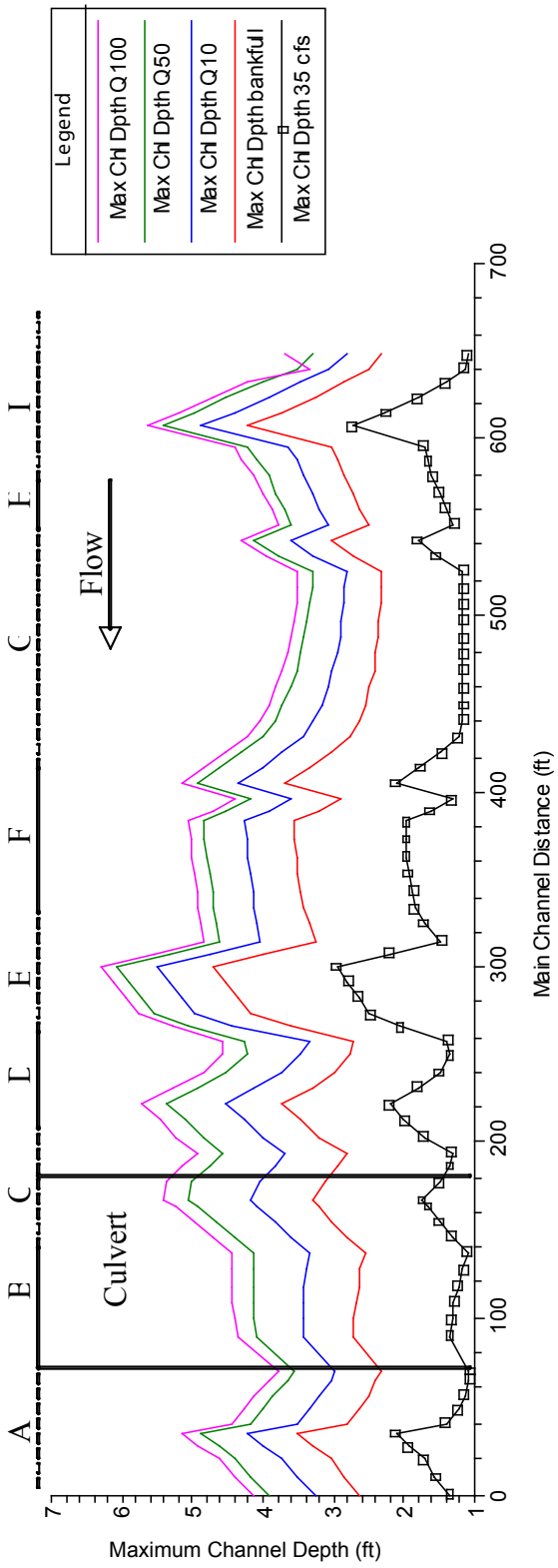

Figure 9—Maximum depth.

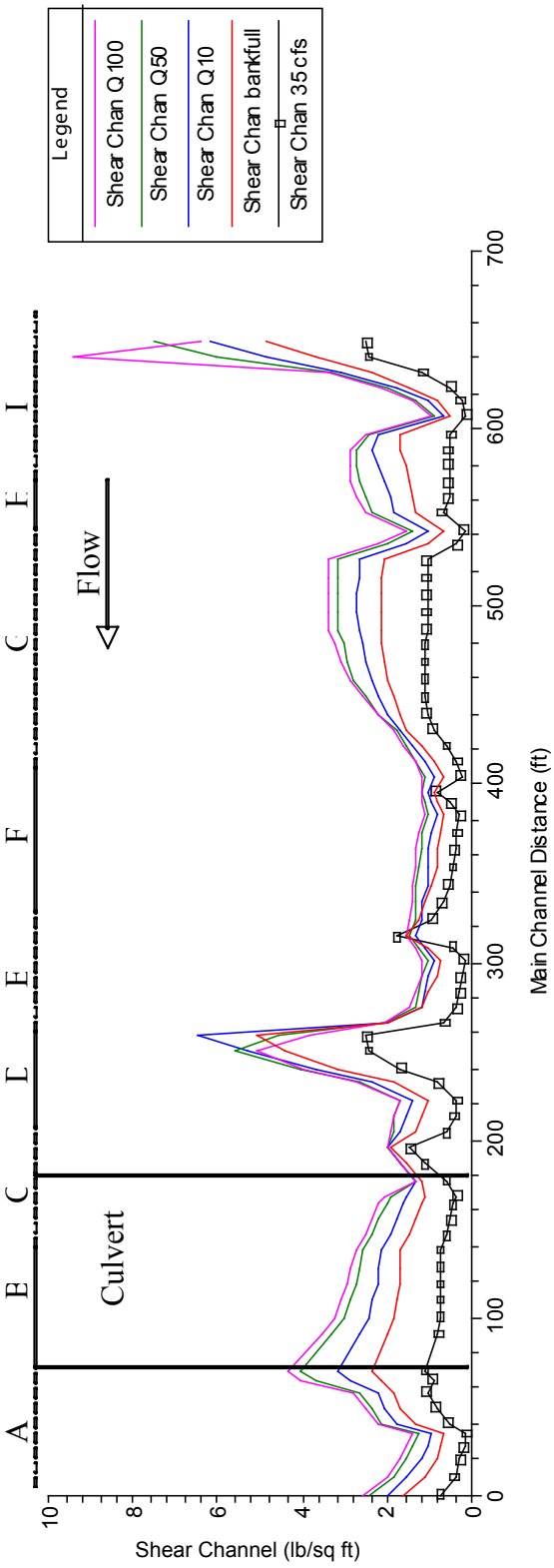

Figure 10—Shear stress (channel) profile.

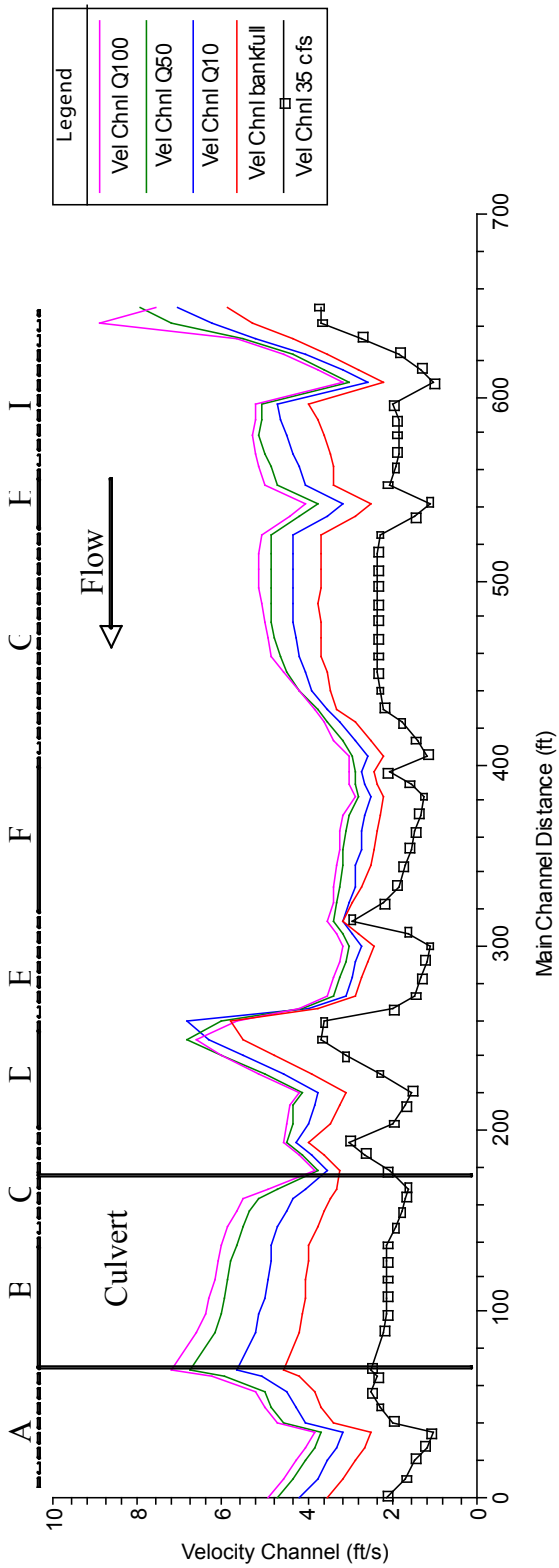

Figure 11—Velocity (channel) profile plot.

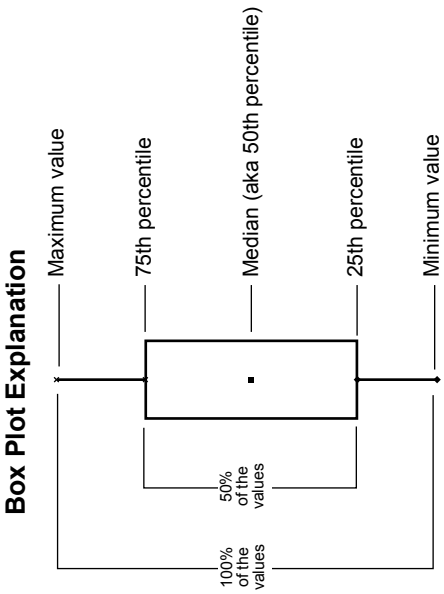

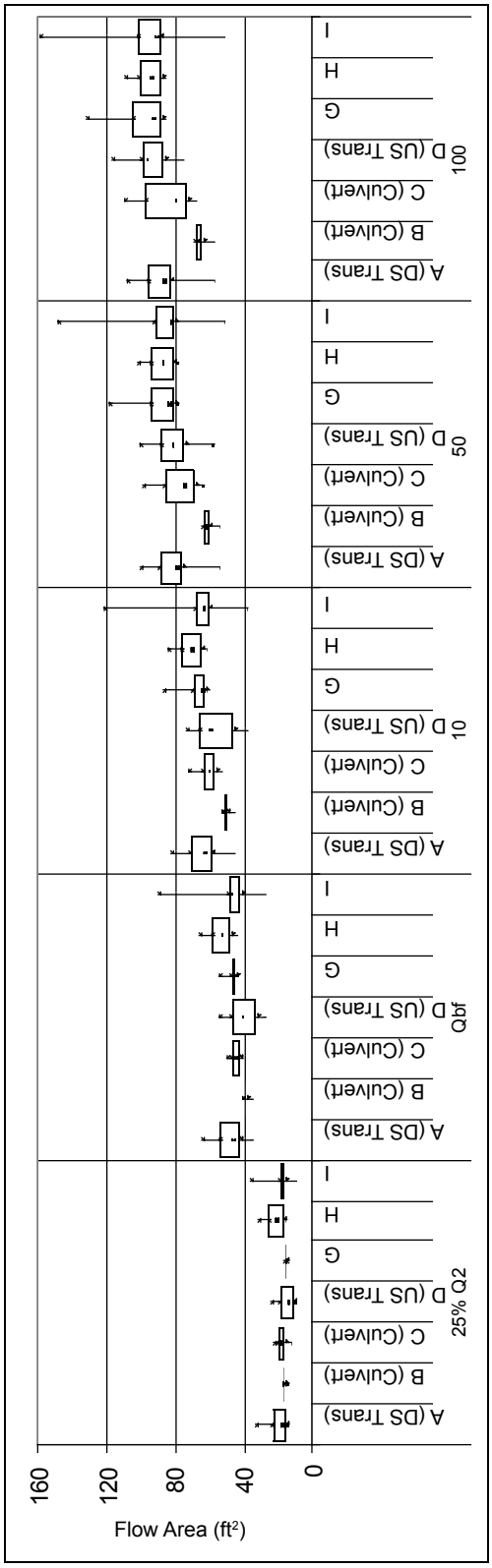

Figure 12—Flow area (total).

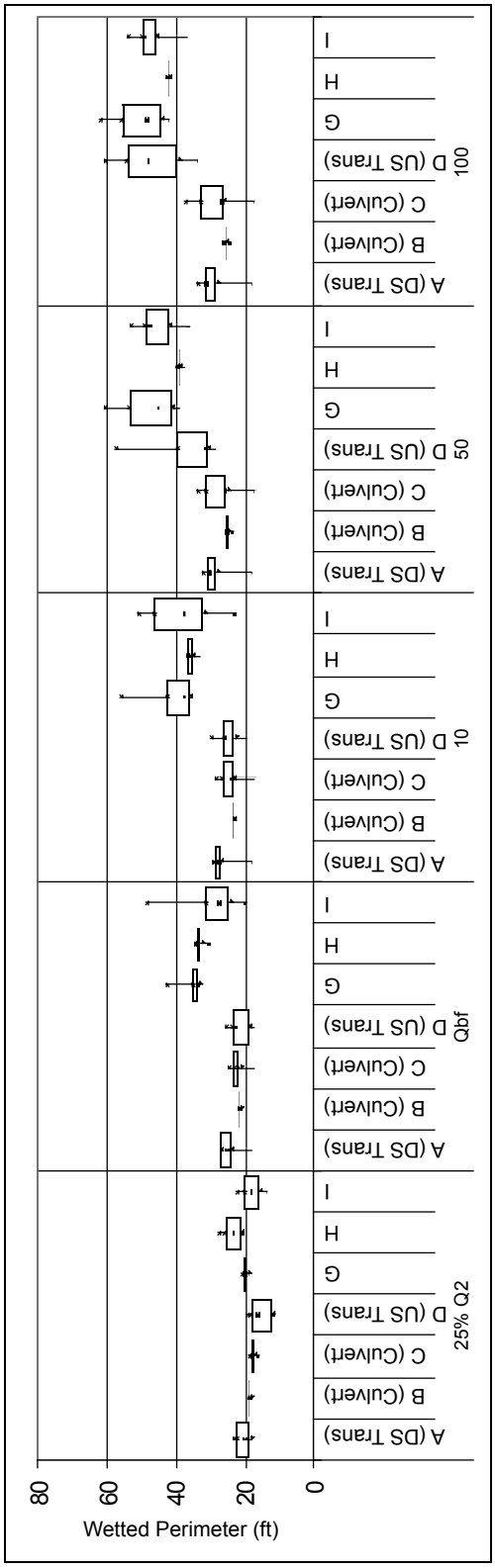

Figure 13—Wetted perimeter.

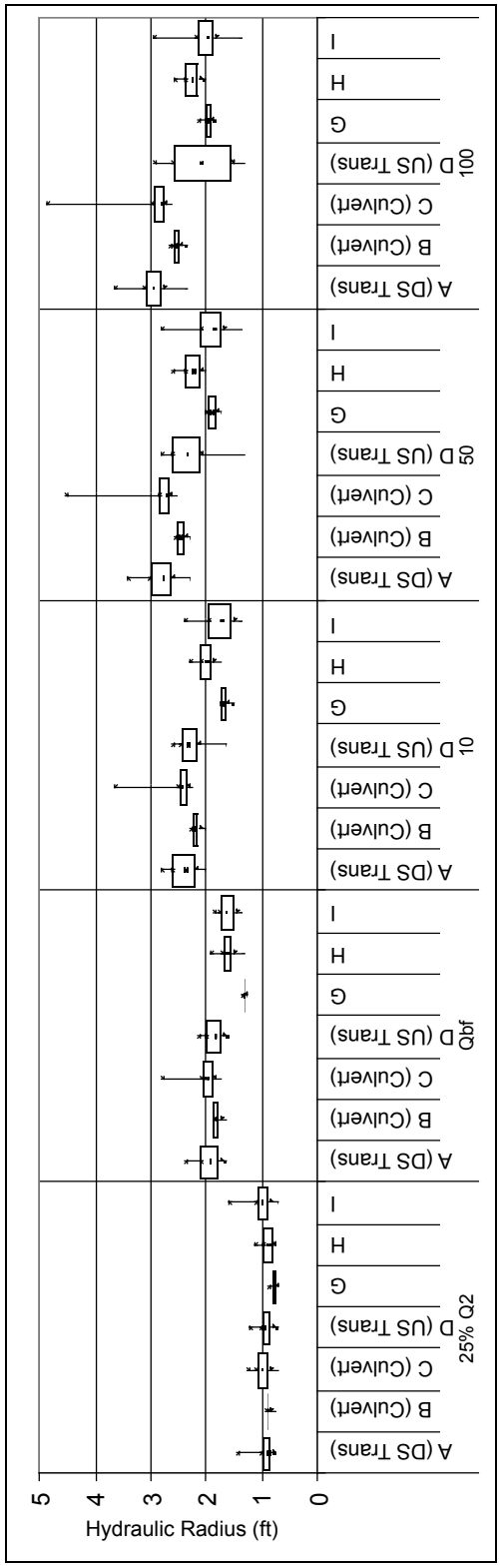

Figure 14—Hydraulic radius.

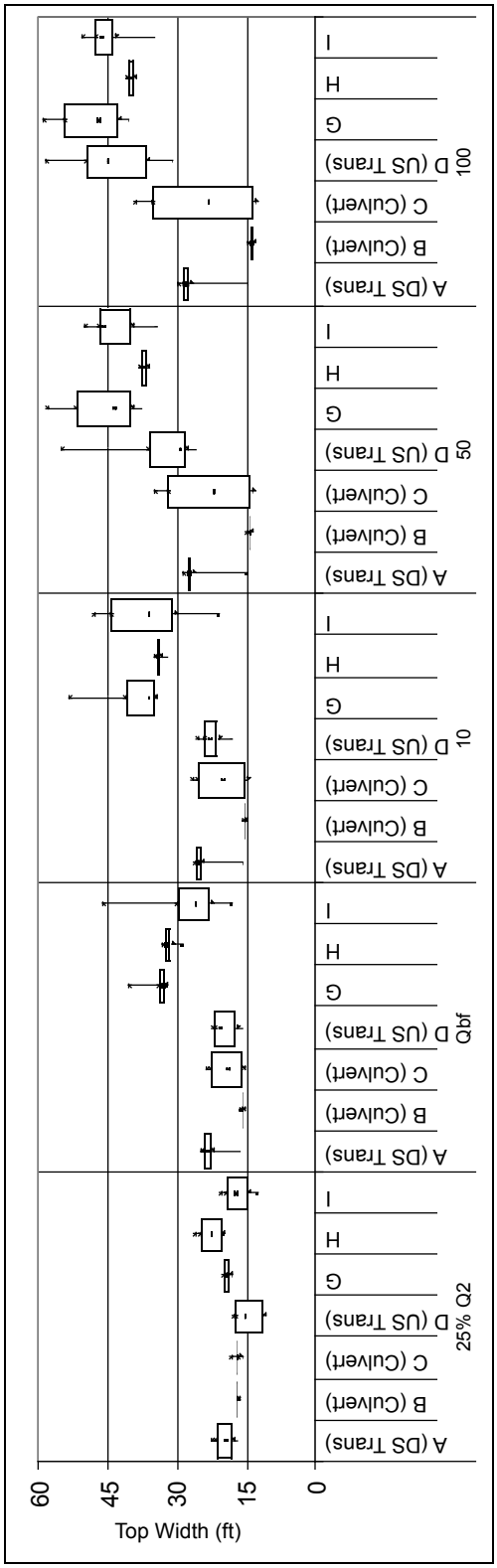

Figure 15—Top width.

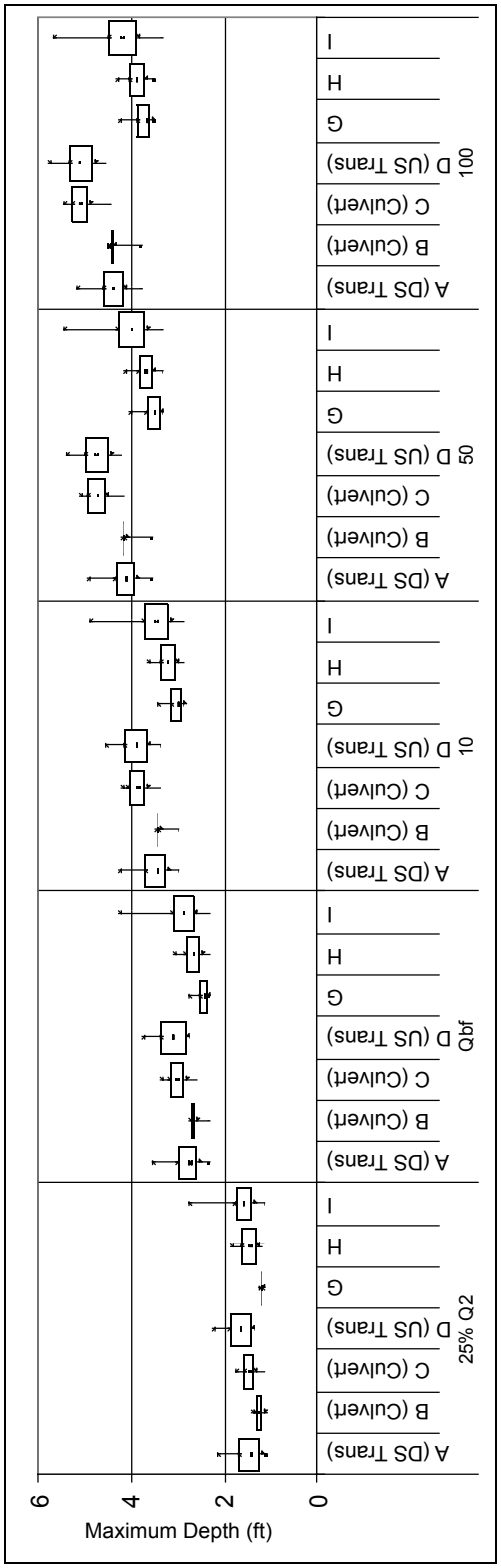

Figure 16—Maximum depth.

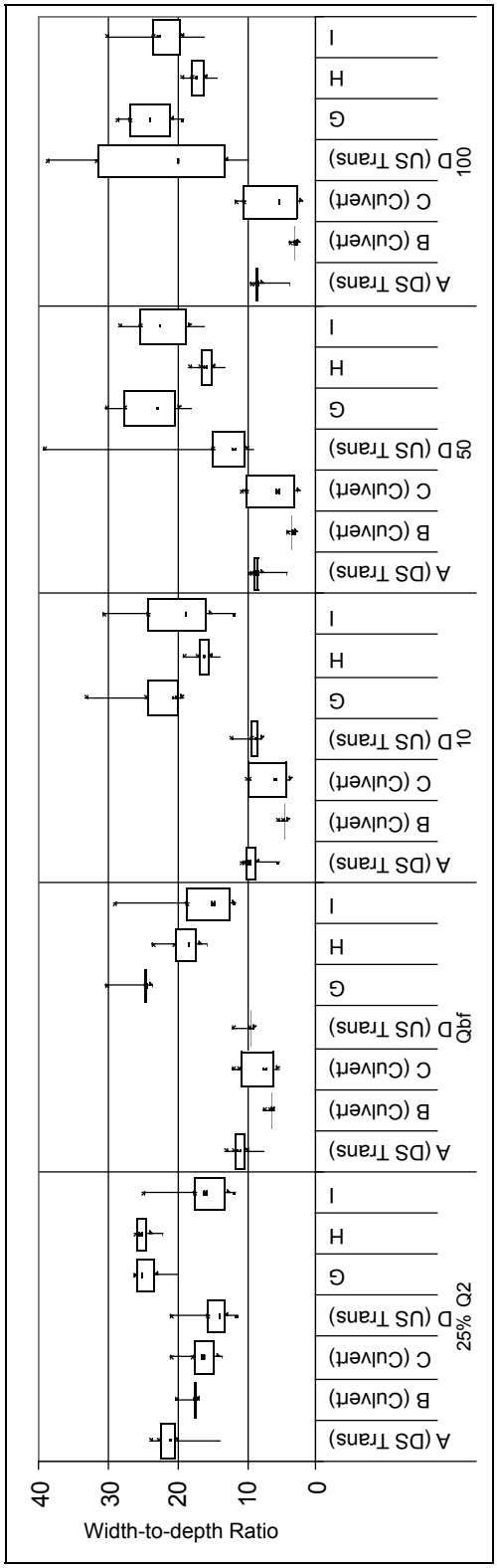

Figure 17—Width-to-depth ratio.

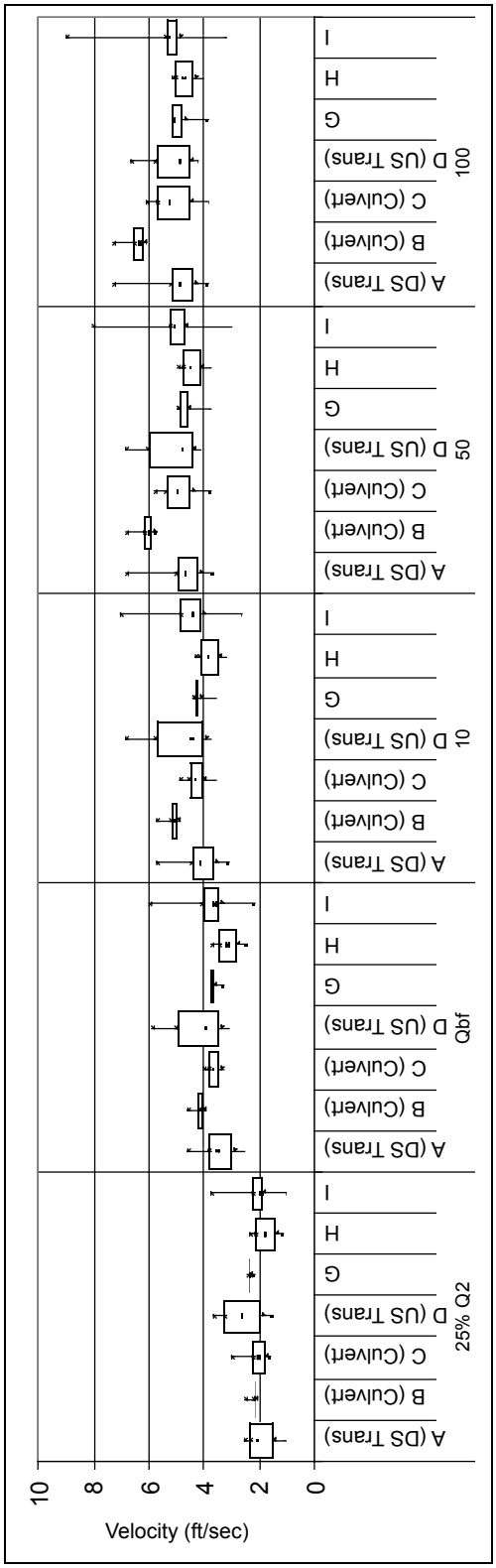

Figure 18—Velocity (channel).

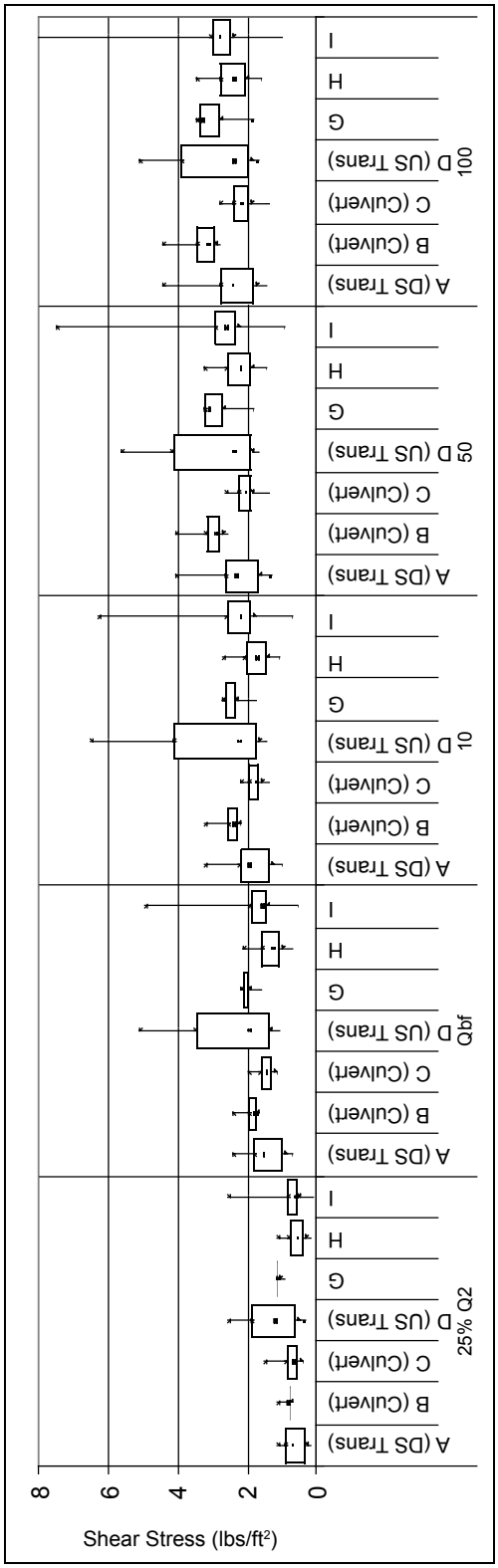

Figure 19—Shear stress (channel).

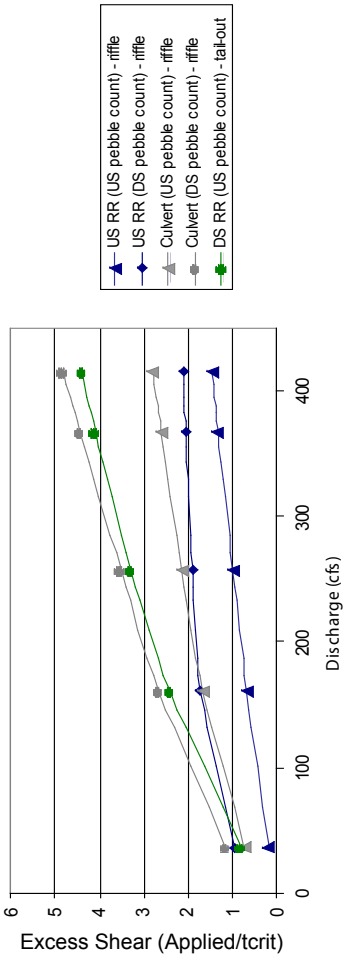

Excess shear stress is the channel shear divided by the critical shear for bed entrainment of the D_{84} particle size. Values of excess shear greater than 1 indicate bed movement for the D_{84} particle size.

Figure 20—Excess shear stress.

Table 3. Sum of squared height difference

Reach	XS Location	Unit type	Sum of squared height difference	Within range of channel conditions?
Culvert	US	Riffle	0.01	Yes
	DS	Riffle	0.03	Yes
Upstream	US	Riffle	0.12	
	DS	Riffle	0.01	
Downstream		Pool/tail-out	0.08	

Table 4. Vertical sinuosity

Segment	Location	Vertical Sinuosity (ft/ft)
A	DS transition	1.001
B	Culvert	1.000
C	Culvert	1.001
D	US transition	1.001
E	US channel	1.002
F	US channel	1.000
G	US channel	1.001
H	US channel	1.001
I	US channel	1.001

Table 5. Depth distribution

Reach	XS Location	25% Q_2	Within range of channel conditions?
Culvert	US	0	No
	DS	0	No
Upstream	US	2	
	DS	1	
Downstream		3	

Table 6—Habitat unit composition

Reach	Percent of surface area			
	Pool	Glide	Riffle	Step
Culvert	0%	25%	75%	0%
Upstream Channel	30%	0%	70%	0%

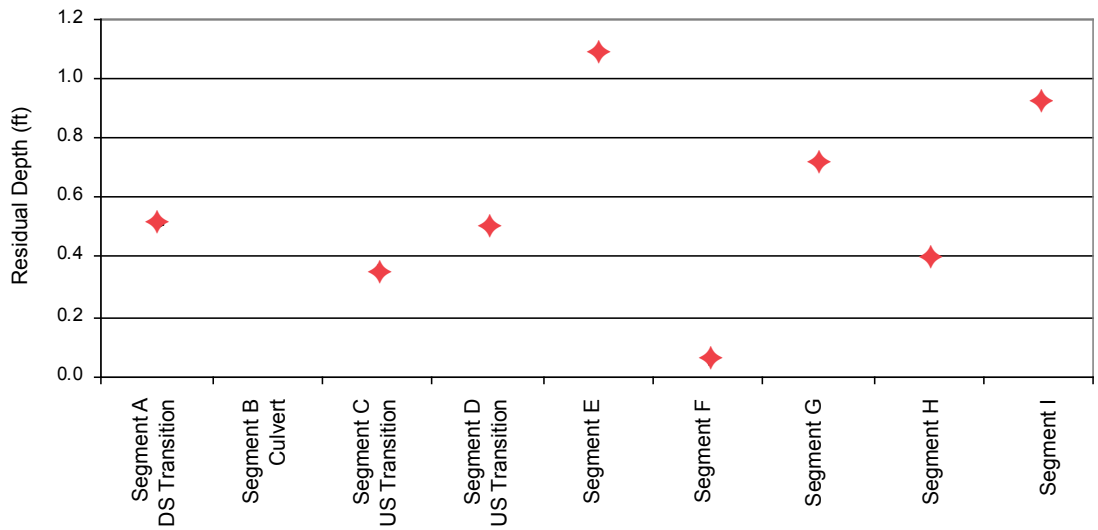

Figure 21—Residual depths.

Table 7. Bed material sorting and skewness

Reach	XS Location	Unit Type	Sorting	Within range of channel conditions?	Skewness	Within range of channel conditions?
Culvert	US	Riffle	1.45	No	0.18	No
	DS	Riffle	1.54	No	0.17	No
Upstream	US	Riffle	2.72		0.45	
	DS	Riffle	1.97		0.20	
Downstream		Pool/tail-out	2.33		0.24	

Table 8. Large woody debris counts

Reach	Pieces/Channel Width
Culvert	0
Upstream	0.12

Terminology:

US = Upstream

DS = Downstream

RR = Reference reach

XS = Cross section

View downstream toward culvert inlet.

View upstream toward culvert outlet.

View downstream from roadway.

View upstream from roadway.

Culvert Scour Assessment

Upstream reference reach from upstream end.

Upstream reference reach – upstream pebble count, riffle.

Upstream reference reach – downstream pebble count, riffle.

Upstream view inside culvert.

Cross Section: Upstream Reference Reach – Upstream Pebble Count

Material	Size Range (mm)	Count	Item %	Cumulative %
sand	<2	17	15%	15%
very fine gravel	2 - 4	2	2%	17%
fine gravel	4 - 5.7	5	5%	22%
fine gravel	5.7 - 8	1	1%	23%
medium gravel	8 - 11.3	2	2%	25%
medium gravel	11.3 - 16	4	4%	28%
coarse gravel	16 - 22.6	6	5%	34%
coarse gravel	22.6 - 32	4	4%	37%
very coarse gravel	32 - 45	6	5%	43%
very coarse gravel	45 - 64	16	15%	57%
small cobble	64 - 90	11	10%	67%
medium cobble	90 - 128	13	12%	79%
large cobble	128 - 180	9	8%	87%
very large cobble	180 - 256	7	6%	94%
small boulder	256 - 362	5	5%	98%
small boulder	362 - 512	1	1%	99%
medium boulder	512 - 1024	1	1%	100%
large boulder	1024 - 2048	0	0%	100%
very large boulder	2048 - 4096	0	0%	100%
bedrock	> 4096	0	0%	100%

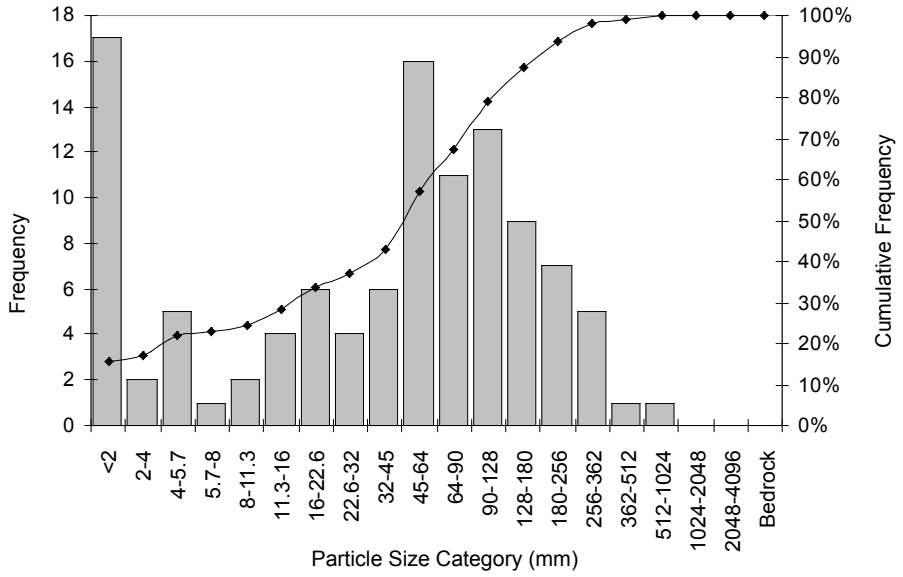

Size Class	Size percent finer than (mm)
D5	1
D16	3
D50	55
D84	159
D95	288
D100	768

Material	Percent Composition
Sand	15%
Gravel	42%
Cobble	36%
Boulder	6%
Bedrock	0%

Sorting Coefficient: 2.72

Skewness Coefficient: 0.45

Cross Section: Upstream Reference Reach – Downstream Pebble Count

Material	Size Class (mm)	Count	Item %	Cumulative %
sand	<2	6	6%	6%
very fine gravel	2 - 4	1	1%	6%
fine gravel	4 - 5.7	6	6%	12%
fine gravel	5.7 - 8	8	7%	19%
medium gravel	8 - 11.3	6	6%	25%
medium gravel	11.3 - 16	7	6%	31%
coarse gravel	16 - 22.6	5	5%	36%
coarse gravel	22.6 - 32	14	13%	49%
very coarse gravel	32 - 45	13	12%	61%
very coarse gravel	45 - 64	8	7%	68%
small cobble	64 - 90	10	9%	77%
medium cobble	90 - 128	14	13%	90%
large cobble	128 - 180	7	6%	96%
very large cobble	180 - 256	3	3%	99%
small boulder	256 - 362	1	1%	100%
small boulder	362 - 512	0	0%	100%
medium boulder	512 - 1024	0	0%	100%
large boulder	1024 - 2048	0	0%	100%
very large boulder	2048 - 4096	0	0%	100%
bedrock	Bedrock	0	0%	100%

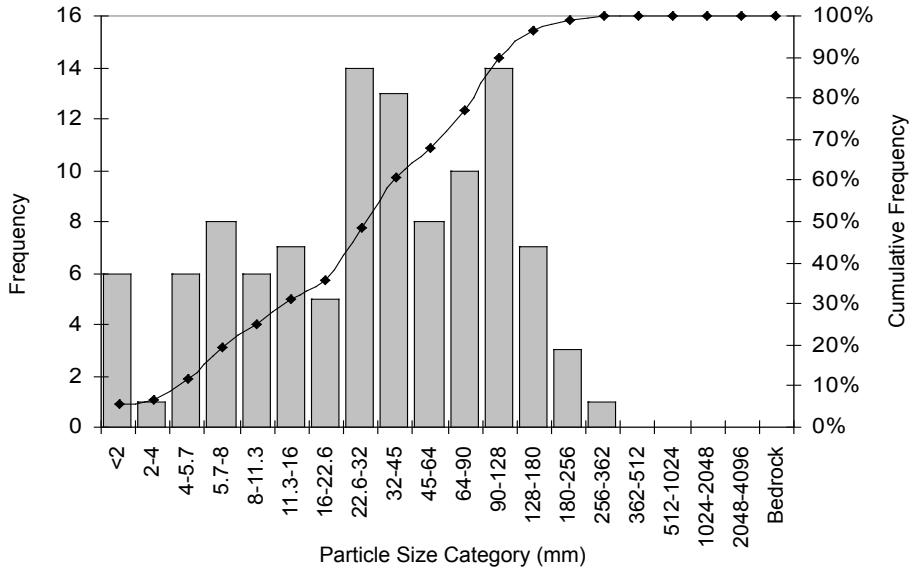

Size Class	Size percent finer than (mm)
D5	2
D16	7
D50	34
D84	111
D95	169
D100	309

Material	Percent Composition
Sand	6%
Gravel	62%
Cobble	31%
Boulder	1%
Bedrock	0%

Sorting Coefficient: 1.97

Skewness Coefficient: 0.20

Cross Section: Culvert – Upstream Pebble Count

Material	Size Class (mm)	Count	Item %	Cumulative %
sand	<2	2	2%	2%
very fine gravel	2 - 4	0	0%	2%
fine gravel	4 - 5.7	2	2%	4%
fine gravel	5.7 - 8	2	2%	6%
medium gravel	8 - 11.3	8	8%	14%
medium gravel	11.3 - 16	3	3%	17%
coarse gravel	16 - 22.6	6	6%	22%
coarse gravel	22.6 - 32	11	11%	33%
very coarse gravel	32 - 45	13	13%	46%
very coarse gravel	45 - 64	13	13%	58%
small cobble	64 - 90	18	17%	76%
medium cobble	90 - 128	9	9%	84%
large cobble	128 - 180	4	4%	88%
very large cobble	180 - 256	0	0%	88%
small boulder	256 - 362	5	5%	93%
small boulder	362 - 512	0	0%	93%
medium boulder	512 - 1024	0	0%	93%
large boulder	1024 - 2048	0	0%	93%
very large boulder	2048 - 4096	0	0%	93%
bedrock	Bedrock	7	7%	100%

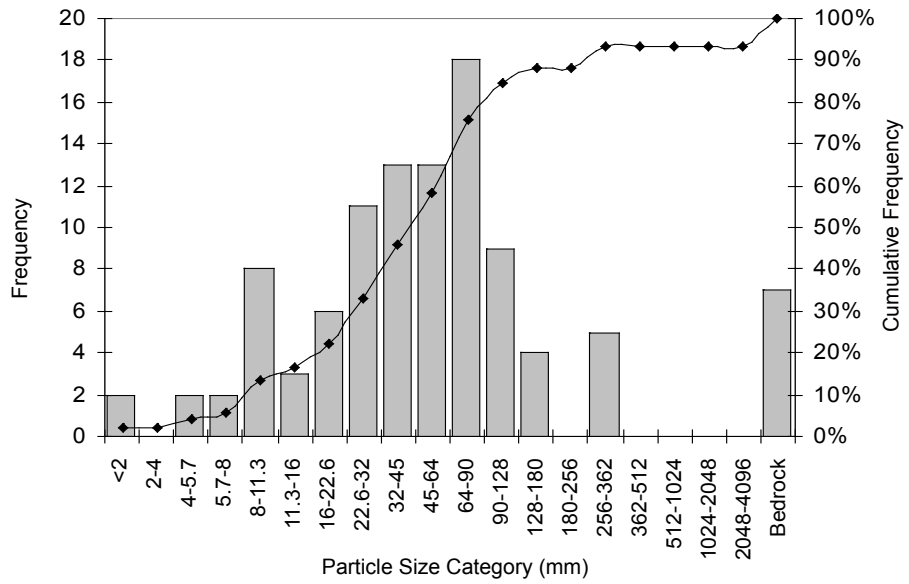

Size Class	Size percent finer than (mm)
D5	7
D16	13
D50	46
D84	105
D95	183
D100	309

Material	Percent Composition
Sand	2%
Gravel	56%
Cobble	30%
Boulder	5%
Bedrock	7%

Sorting Coefficient: 1.45

Skewness Coefficient: 0.18

Cross Section: Culvert – Downstream Pebble Count

Material	Size Class (mm)	Count	Item %	Cumulative %
sand	<2	2	2%	2%
very fine gravel	2 - 4	2	2%	4%
fine gravel	4 - 5.7	3	3%	7%
fine gravel	5.7 - 8	5	5%	12%
medium gravel	8 - 11.3	5	5%	17%
medium gravel	11.3 - 16	11	11%	28%
coarse gravel	16 - 22.6	10	10%	38%
coarse gravel	22.6 - 32	8	8%	46%
very coarse gravel	32 - 45	11	11%	58%
very coarse gravel	45 - 64	11	11%	69%
small cobble	64 - 90	12	12%	81%
medium cobble	90 - 128	14	14%	95%
large cobble	128 - 180	4	4%	99%
very large cobble	180 - 256	1	1%	100%
small boulder	256 - 362	0	0%	100%
small boulder	362 - 512	0	0%	100%
medium boulder	512 - 1024	0	0%	100%
large boulder	1024 - 2048	0	0%	100%
very large boulder	2048 - 4096	0	0%	100%
bedrock	Bedrock	0	0%	100%

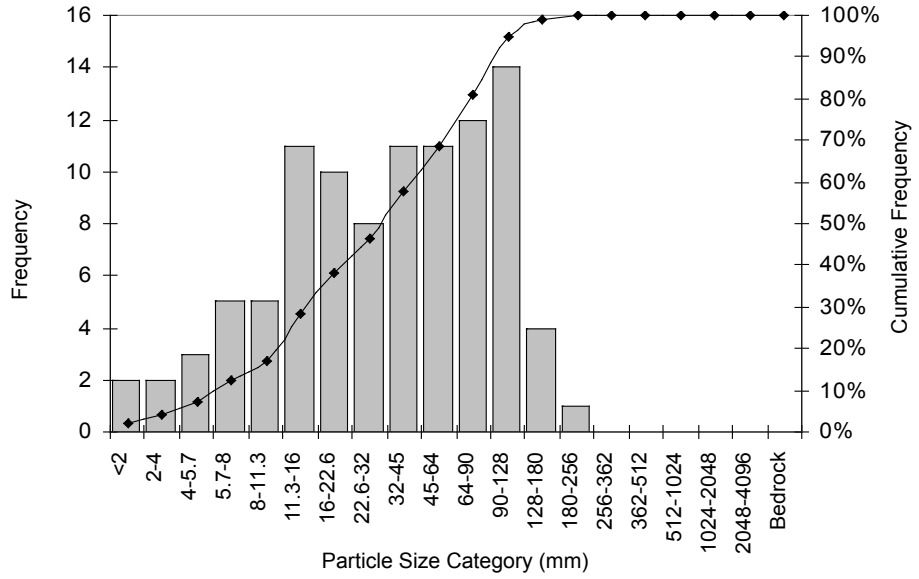

Size Class	Size percent finer than (mm)
D5	5
D16	11
D50	36
D84	99
D95	128
D100	218

Material	Percent Composition
Sand	2%
Gravel	67%
Cobble	31%
Boulder	0%
Bedrock	0%

Sorting Coefficient: 1.54

Skewness Coefficient: 0.17

Cross Section: Downstream of culvert – Only Pebble Count

Material	Size Class (mm)	Count	Item %	Cumulative %
sand	<2	17	16%	16%
very fine gravel	2 - 4	4	4%	20%
fine gravel	4 - 5.7	3	3%	23%
fine gravel	5.7 - 8	7	7%	29%
medium gravel	8 - 11.3	4	4%	33%
medium gravel	11.3 - 16	11	10%	43%
coarse gravel	16 - 22.6	17	16%	59%
coarse gravel	22.6 - 32	3	3%	62%
very coarse gravel	32 - 45	11	10%	73%
very coarse gravel	45 - 64	16	15%	88%
small cobble	64 - 90	3	3%	91%
medium cobble	90 - 128	3	3%	93%
large cobble	128 - 180	3	3%	96%
very large cobble	180 - 256	0	0%	96%
small boulder	256 - 362	0	0%	96%
small boulder	362 - 512	2	2%	98%
medium boulder	512 - 1024	2	2%	100%
large boulder	1024 - 2048	0	0%	100%
very large boulder	2048 - 4096	0	0%	100%
bedrock	Bedrock	0	0%	100%

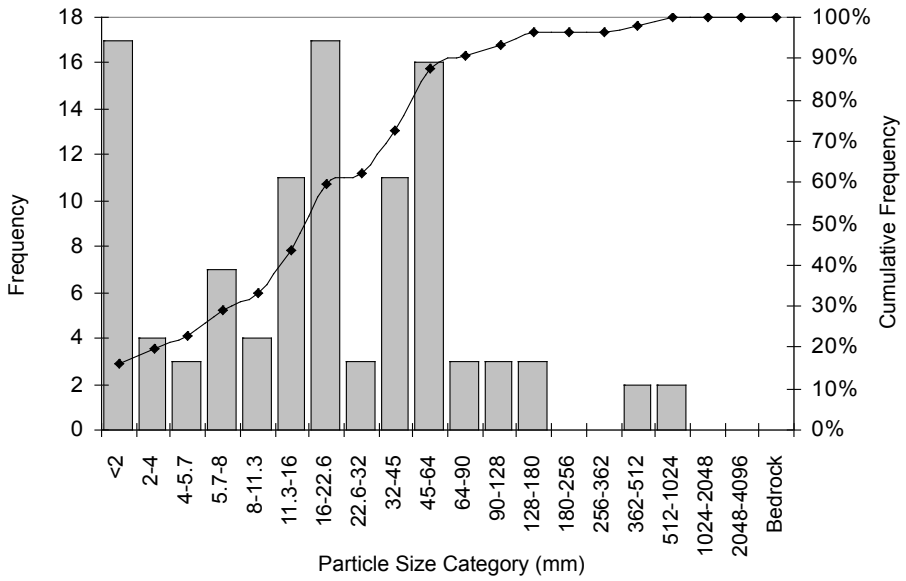

Size Class	Size percent finer than (mm)
D5	1
D16	2
D50	19
D84	59
D95	157
D100	768

Material	Percent Composition
Sand	16%
Gravel	72%
Cobble	8%
Boulder	4%
Bedrock	0%

Sorting Coefficient: 2.33

Skewness Coefficient: 0.24

**This pebble count was not used in the analysis because the downstream reach was not used as a representative reach.*