HEHE CREEK

Site Information

Site Location: Willamette NF, Forest Road 1831

Year Installed: Circa 1986

Lat/Long: 122°24'21.63"W **Watershed Area (mi²):** 1.86

44°1'58.62"N **Stream Slope (ft/ft)[1]:** 0.0474

Channel Type: Step-pool

Bankfull Width (ft): 19.5 **Survey Date:** April 4, 2007

[1]Water surface slope extending up to 20 channel widths up and downstream of crossing.

Culvert Information

Culvert Type: Open-bottom arch **Culvert Material:** Annular CMP

Culvert Width: 17 ft **Outlet Type:** Hybrid projecting/mitered

Culvert Length: 60 ft **Inlet Type:** Hybrid projecting/mitered

Pipe Slope (structure slope): 0.045

Culvert Bed Slope: 0.041

(First hydraulic control upstream of inlet to first hydraulic control downstream of outlet.)

Culvert width as a percentage of bankfull width: 0.87

Alignment Conditions: Online with natural channel.

Bed Conditions: Large cobbles/boulders forming steps in culvert.

Pipe Condition: Good condition. Little-to-no rust.

Hydrology

Discharge (cfs) for indicated recurrence interval

25% 2-yr	Q_{bf}[2]	2-year	5-year	10-year	50-year	100-year
45	160	178	258	310	424	471

[2]Bankfull flow estimated by matching modeled water surface elevations to field-identified bankfull elevations.

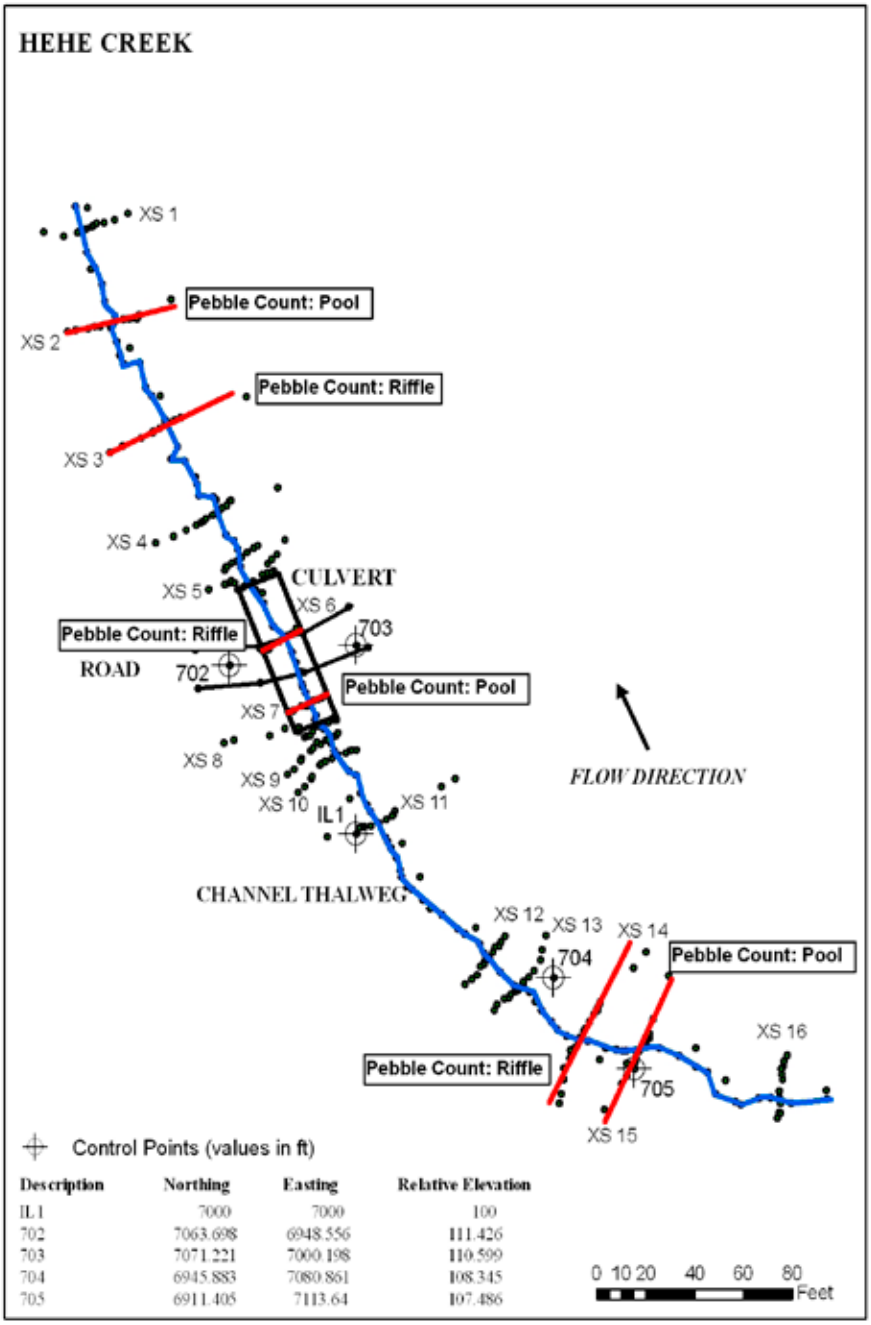

Description	Northing	Easting	Relative Elevation
IL1	7000	7000	100
702	7063.698	6948.556	111.426
703	7071.221	7000.198	110.599
704	6945.883	7080.861	108.345
705	6911.405	7113.64	107.486

Points represent survey points

Figure 1—Plan view map.

HISTORY

There is no information available for site history.

SITE DESCRIPTION

The Hehe Creek culvert is a bottomless arch that is mitered to conform to the slope of the road fill. There has been some scour to bedrock at the inlet and just upstream, and the original material placed inside the culvert has most likely been repositioned. Nevertheless, at the flow during the survey, the channel in the culvert appeared in good condition. Material above the wetted channel formed intermittent banks and served to concentrate flow in places, making for good passage conditions for aquatic and terrestrial organisms.

Exposed footings (stem walls) run along the length of the culvert. A rootwad had been deposited just inside the downstream end of the culvert while large boulders located along the footing have resulted in zones of deposition. Riprap lines both banks upstream and downstream of the culvert.

After a large rock step upstream of the inlet to the culvert, the channel transitions to a flatter gradient through the culvert. Large, angular bed material creates a riffle interspersed by backwatered pools during low flows. Grade through the culvert is controlled by the downstream aggradation of material, evident by the drop in channel elevation at the outlet.

The upstream reach consists of a moderate gradient step-pool channel with an extremely small low active flood plain surface. Sitting in a fairly confined and narrow valley, the channel is frequently against the valley walls. Steep riffles generally made up of large angular boulders are interspersed by pools. Large wood had fallen across the channel in some locations providing structure and geomorphic complexity.

The downstream reach was very similar to the upstream one, except for a large number of alders that had fallen across the channel, most of which were spanning the channel. Some of these were potentially a result of roadside clearing.

SURVEY SUMMARY

Seventeen cross sections and a longitudinal profile were surveyed along Hehe Creek in April 2007 to characterize the culvert, an upstream reference reach, and a downstream reference reach. Reference sections in the culvert were taken through a pool and riffle. Two additional cross sections were surveyed upstream to characterize the inlet as well as the contraction of flow. Another two cross sections were surveyed downstream of the culvert to characterize the outlet and the expansion of flow.

Four cross sections were surveyed to characterize the upstream reach; one each at the upstream and downstream end, one through a riffle, and one through a pool. Four cross sections were also surveyed to characterize the downstream representative reach; one each at the upstream and downstream end, one through a riffle, and one through a pool.

PROFILE ANALYSIS

Segment summary

The profile analysis resulted in a total of 10 profile segments. The culvert consisted of three profile segments. The downstream segment in the culvert was comparable to two representative profile segments. The upstream two segments in the culvert were comparable to representative profile segments in the downstream channel. The upstream transition segment was comparable to two representative profile segments. The downstream transition segment was also comparable to two representative profile segments. See figure 2 and table 1.

SCOUR CONDITIONS

Observed conditions

Footing scour – There was no observed scour undermining footings or threatening structure integrity.

Culvert-bed adjustment – The bed has undergone no obvious significant adjustment. There is material throughout the culvert. It is assumed that some of the largest material was placed during construction.

Profile characteristics – The profile has a mostly uniform gradient through the crossing with a slight concavity that is focused near and upstream of the inlet. This area is comprised of bedrock and may represent an area that has experienced some scour and associated incision.

Residual depths – Culvert residual depths are within, similar to, or greater than the residual depths in corresponding profile segments (figure 21). The downstream and upstream transition segments (C and G) are mostly within the range of those found in corresponding profile segments (A and H).

Substrate – Bed material distributions in the natural channel are very poorly sorted, with a broad range of size classes well represented. The culvert cross-sections are less poorly sorted. The upstream cross section in the culvert, located in a pool unit, has a very negative skewness, reflecting the predominance of finer material. The pool cross sections in the natural channel also exhibit either low or negative skewness values. The abundance of fine and coarse material in the culvert is relatively similar to what is found in the natural channel.

Predicted conditions

Cross-section characteristics – The culvert has an effect on cross-section flow geometry (figures 5-7 and 12-19). The effect is most apparent for the width-related metrics top width and wetted perimeter. The culvert begins to reduce these values at the Q_{bf} and above. Hydraulic radius and maximum depth appear to be less affected. The downstream transition (C) is mostly within the range of the corresponding profile segments (A and H). The upstream transition (G) has greater widths but similar depths when compared to the corresponding profile segments (A and H).

Shear stress – Shear stresses in the culvert and in the transition segments do not differ significantly from the ranges of values in corresponding profile segments (figure 19).

Excess shear – The culvert excess shear is within the range of excess shear in the natural channel (figure 20).

Velocity – Velocity in the culvert and in the transition segments do not differ significantly from the ranges of values in corresponding profile segments (figure 18)

Scour summary

There was no scour observed in the culvert. The presence of bedrock upstream of the inlet and the slight concavity of the profile in this area suggest that some inlet scour may have occurred and resulted in minor channel incision. In general, this is considered a good installation with respect to scour. Stable bed elements in the culvert mimic those in the natural channel.

AOP CONDITIONS

Cross-section complexity – The sum of squared height differences in the culvert cross sections are both lower than those in the channel cross sections (table 3).

Profile complexity – The most downstream profile segment in the culvert has less vertical sinuosity than the corresponding profile segment in the channel; the other two culvert segments have greater vertical sinuosity than their corresponding channel segments (table 4).

Depth distribution – There is less channel margin habitat in the culvert compared to the channel at the 25 percent Q_2 (table 5).

Habitat units – There is slightly less pool habitat in the culvert but the habitat unit distributions are relatively similar (table 6).

Residual depths – Culvert residual depths are within, similar to, or greater than the residual depths in corresponding profile segments (figure 21). The downstream and upstream transition segments (C and G) are mostly within the range of those found in corresponding profile segments (A and H).

Substrate – Bed material distributions in the natural channel are very poorly sorted, with a broad range of size classes well represented. The culvert cross sections are less poorly sorted. The upstream cross section in the culvert, located in a pool unit, has a very negative skewness, reflecting the predominance of finer material. The pool cross sections in the natural channel also exhibit either low or negative skewness values. The abundance of fine and coarse material in the culvert is relatively similar to what is found in the natural channel.

Large woody debris – There was a low amount of LWD present in the culvert (table 8). The natural channel had high LWD abundance. Some of this wood was suspended above the low flow channel but was within the bankfull channel. LWD formed steps and scour pools in the channel outside the crossing and played a primary role in habitat unit creation and complexity.

AOP summary

This is considered a good installation with respect to AOP. The unit types and pattern of bedforms in the culvert are similar to that found in the natural channel. There is potentially less shallow channel margin habitat available at certain flows but residual depths, profile complexity, and the frequency of coarse material indicate adequate complexity to provide velocity refuge for fish passage. At the time of the survey, there were semi-continuous banks through the culvert. At lower flows these banks are likely continuous and would provide for good terrestrial passage but at the flow during the survey and greater, they become at least partially inundated and are less suitable for terrestrial passage.

DESIGN CONSIDERATIONS

The Hehe Creek culvert is a good design with respect to scour and AOP. The culvert size appears adequate to convey high flows without creating significant scour risk. Some scour and associated incision may have occurred near and upstream of the inlet but it is unknown whether this adjustment was related to the current culvert or a previous installation. The presence of bedrock helps to limit scour in this area. Culvert design at this site is made easier by the lack of a significant valley transition through this area.

The one design consideration for this site relates to bank construction in the culvert. There are discontinuous banks in the culvert that likely provide for terrestrial organism passage at low flow periods. Construction of continuous banks would provide for terrestrial passage at a broader range of flows and may also increase the amount of shallow channel margin habitat available for fish passage at flows near the 25 percent Q_2.

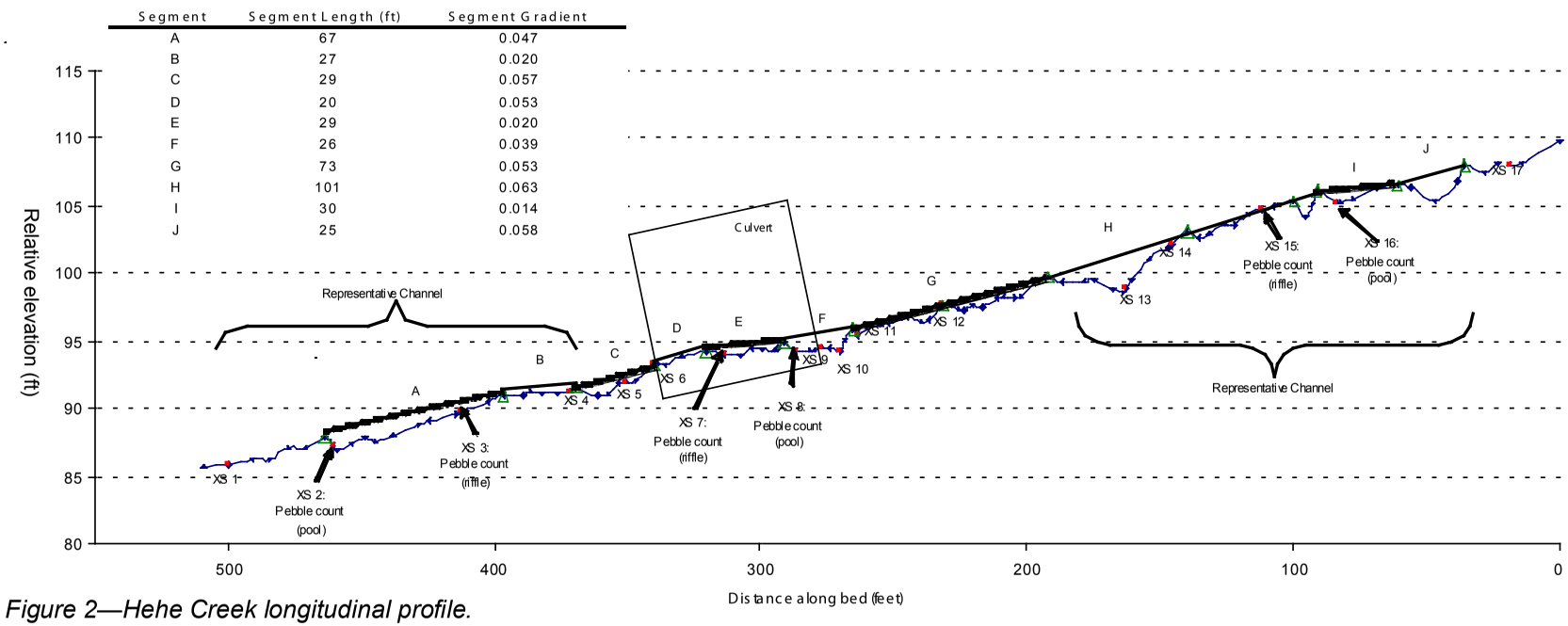

Figure 2—Hehe Creek longitudinal profile.

Table 1—Segment comparisons

Culvert Segment	Representative Channel Segment	% Difference in Gradient
D	A	11.6%
D	H	15.8%
E	B	0.6%
F	A	16.7%
Upstream Transition		
G	H	17.0%
G	A	10.3%
Downstream Transition		
C	A	17.4%
C	H	9.9%

Table 2—Summary of segments used for comparisons

Segment	Range of Manning's n values[1]	# of measured XSs	# of interpolated XSs
A	0.1028 – 0.1151	2	7
B	0.1074 – 0.1107	1	4
C	0.1077 – 0.1137	2	4
D	0.1093 – 0.1137	1	3
E	0.1048 – 0.1118	1	5
F	0.1061 – 0.1143	3	3
G	0.1143 – 0.119	2	8
H	0.107 – 0.1258	3	12

[1]Obtained using equation from Jarrett (1984): n = 0.39S0.38R-0.16, where S=stream slope; R=hydraulic radius. Jarrett's equation only applied within the following ranges: S = 0.002 to 0.08, R = 0.5 ft to 7 ft. For cross-sections outside these ranges, n was computed either from adjacent sections that fell within the ranges, using the guidance of Arcement and Schneider (1987), or from the HEC-RAS recommendations for culvert modeling.

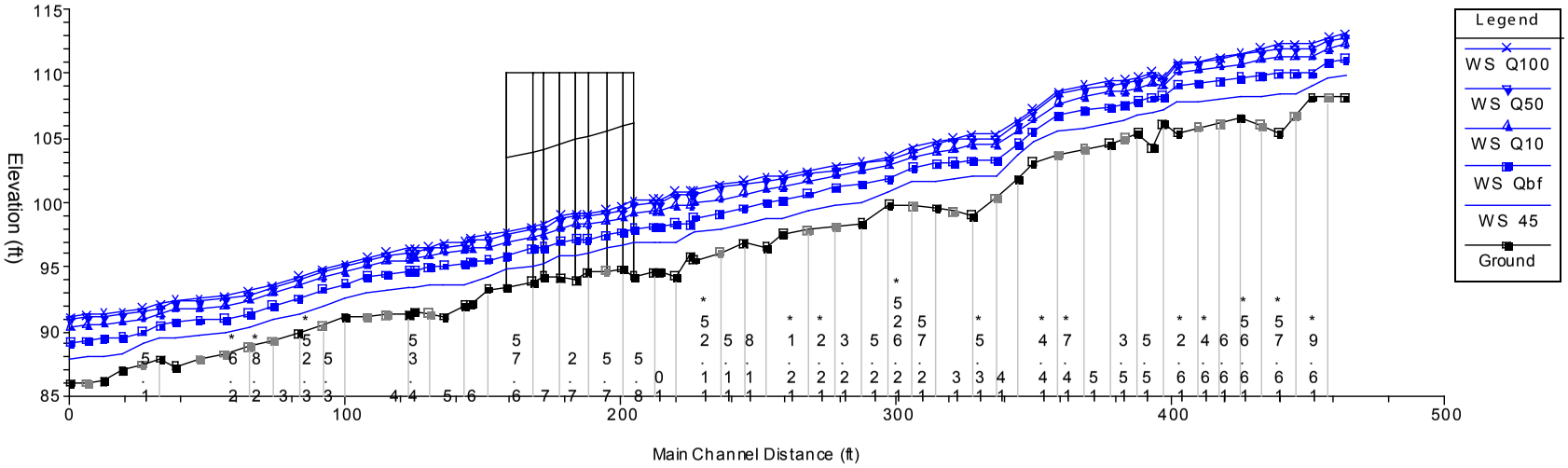

Stations with decimal values are interpolated cross sections placed along the surveyed profile.

Figure 3—HEC-RAS profile.

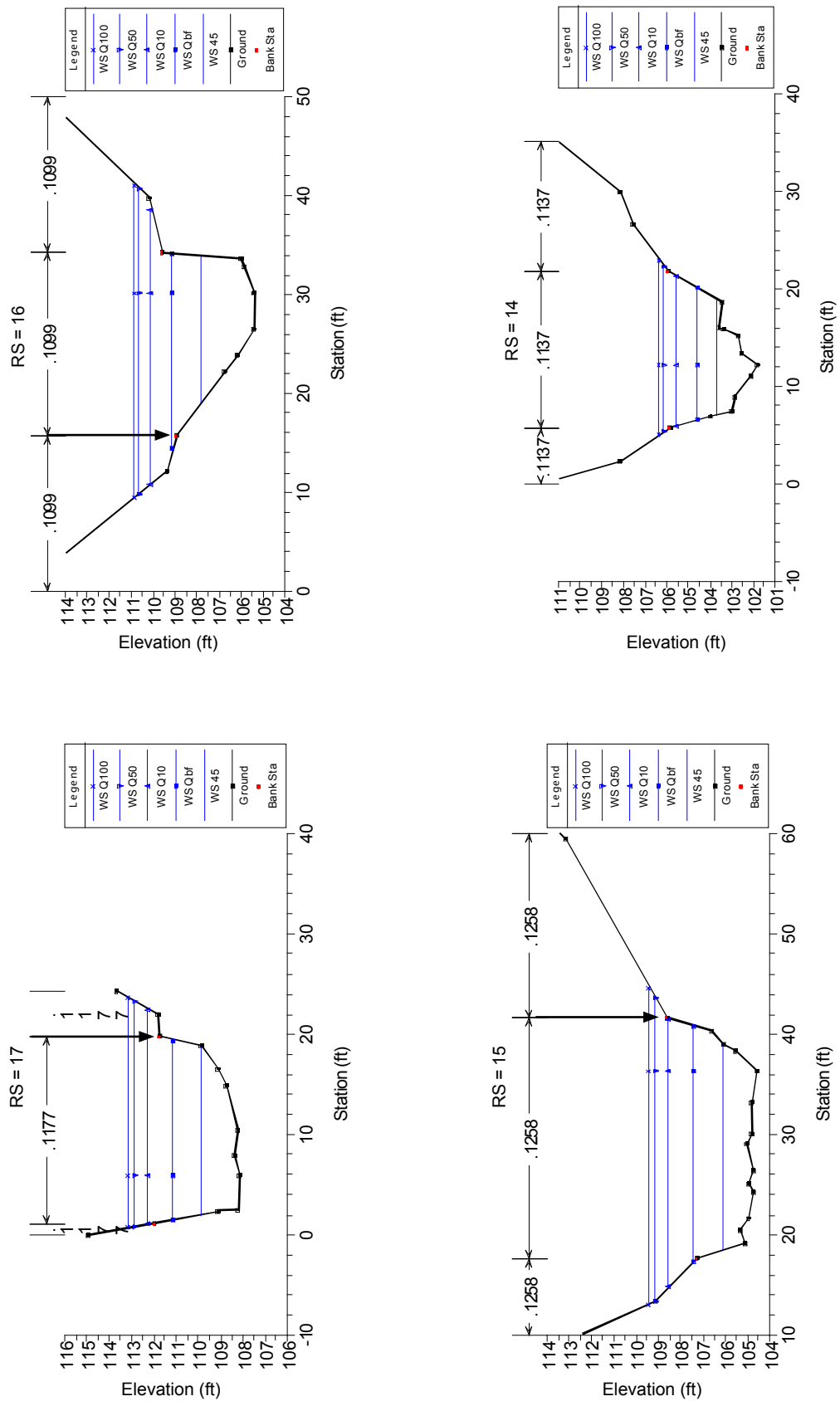

Figure 4—Cross-section plots. Only measured cross sections are included. Manning's n values are included at the top of the cross section. The stationing (RS) corresponds to the stationing on the HEC-RAS profile. Green arrows define the ineffective flow areas. Black arrows represent points identified in the field as the bankfull channel boundary. Only those points identified in the field and supported by hydraulic and topographic analyses are shown below.

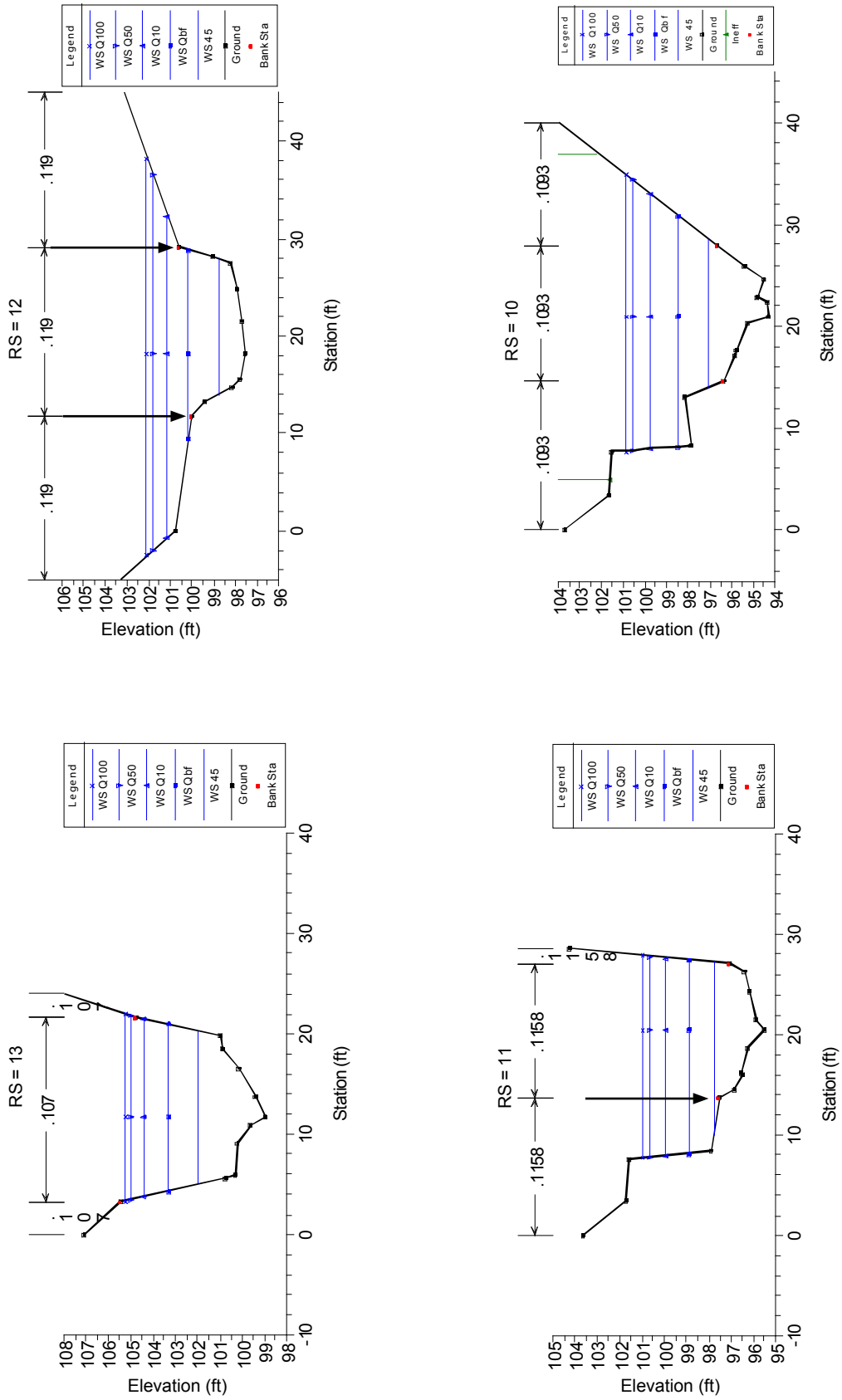

Figure 4—Cross-section plots. Only measured cross sections are included. Manning's n values are included at the top of the cross section. The stationing (RS) corresponds to the stationing on the HEC-RAS profile. Green arrows define the ineffective flow areas. Black arrows represent points identified in the field as the bankfull channel boundary. Only those points identified in the field and supported by hydraulic and topographic analyses are shown below. (continued)

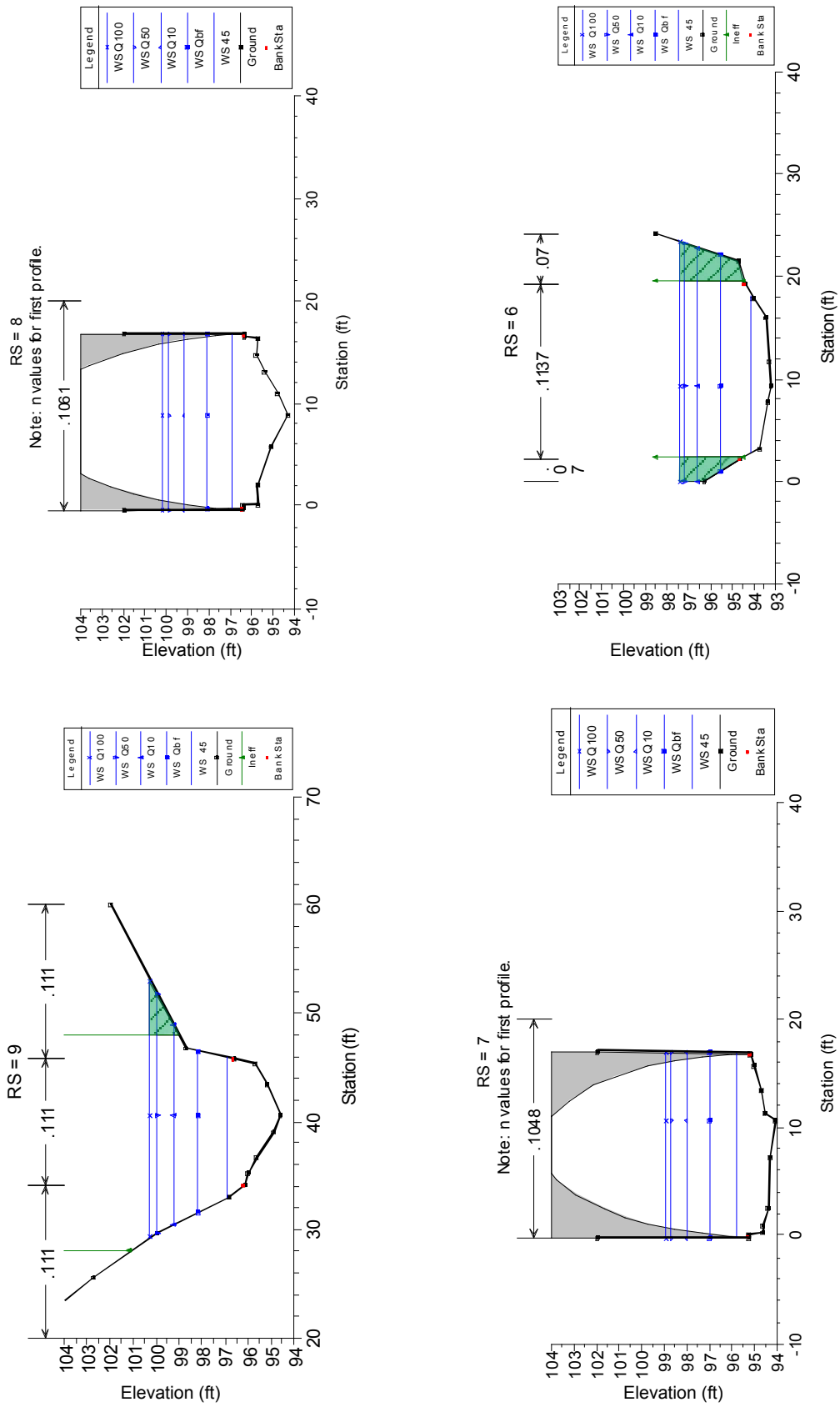

Figure 4—Cross-section plots. Only measured cross sections are included. Manning's n values are included at the top of the cross section. The stationing (RS) corresponds to the stationing on the HEC-RAS profile. Green arrows define the ineffective flow areas. Black arrows represent points identified in the field as the bankfull channel boundary. Only those points identified in the field and supported by hydraulic and topographic analyses are shown below.. (continued)

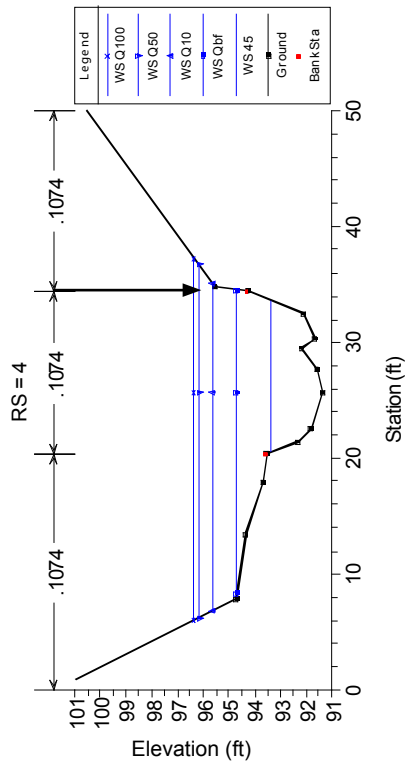

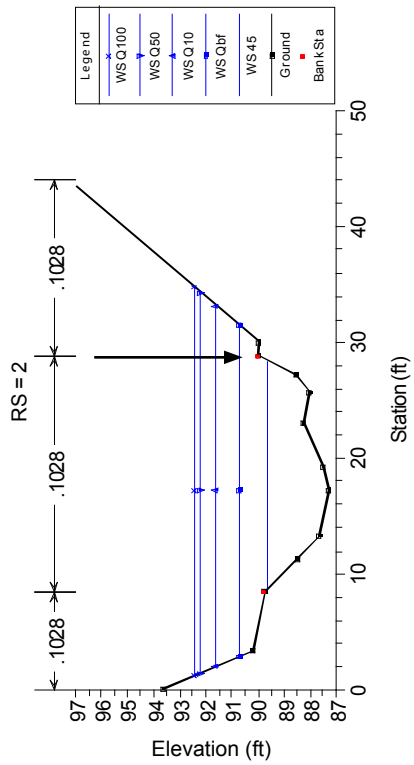

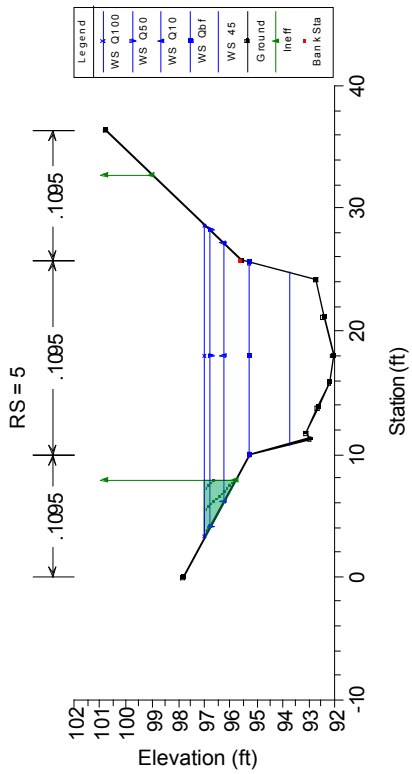

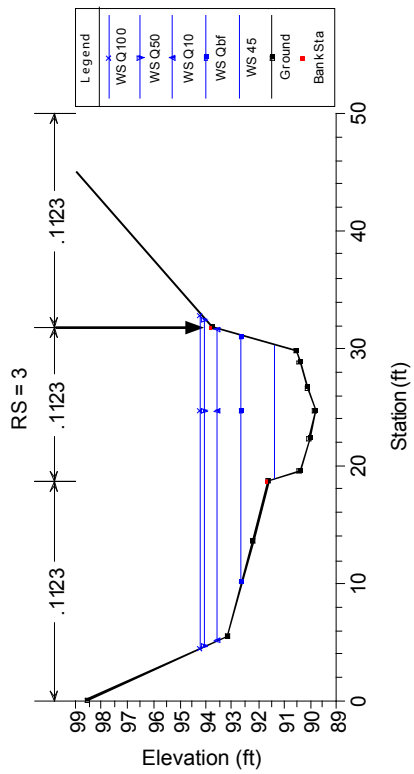

Figure 4—Cross-section plots. Only measured cross sections are included. Manning's n values are included at the top of the cross section. The stationing (RS) corresponds to the stationing on the HEC-RAS profile. Green arrows define the ineffective flow areas. Black arrows represent points identified in the field as the bankfull channel boundary. Only those points identified in the field and supported by hydraulic and topographic analyses are shown below.. (continued)

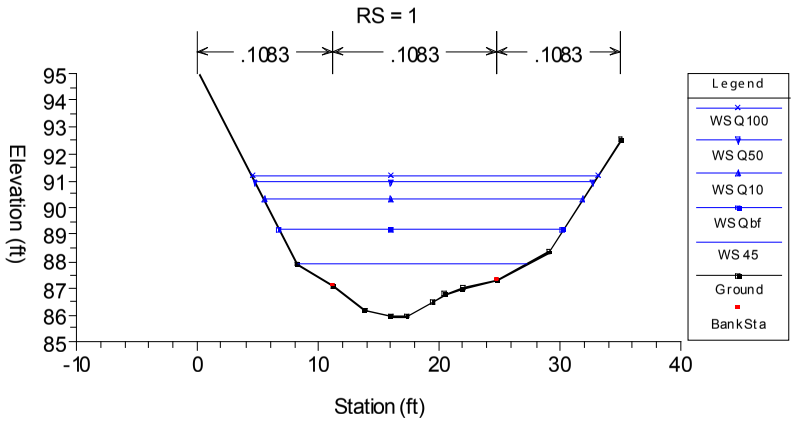

Figure 4—Cross-section plots. Only measured cross sections are included. Manning's n values are included at the top of the cross section. The stationing (RS) corresponds to the stationing on the HEC-RAS profile. Green arrows define the ineffective flow areas. Black arrows represent points identified in the field as the bankfull channel boundary. Only those points identified in the field and supported by hydraulic and topographic analyses are shown below.. (continued)

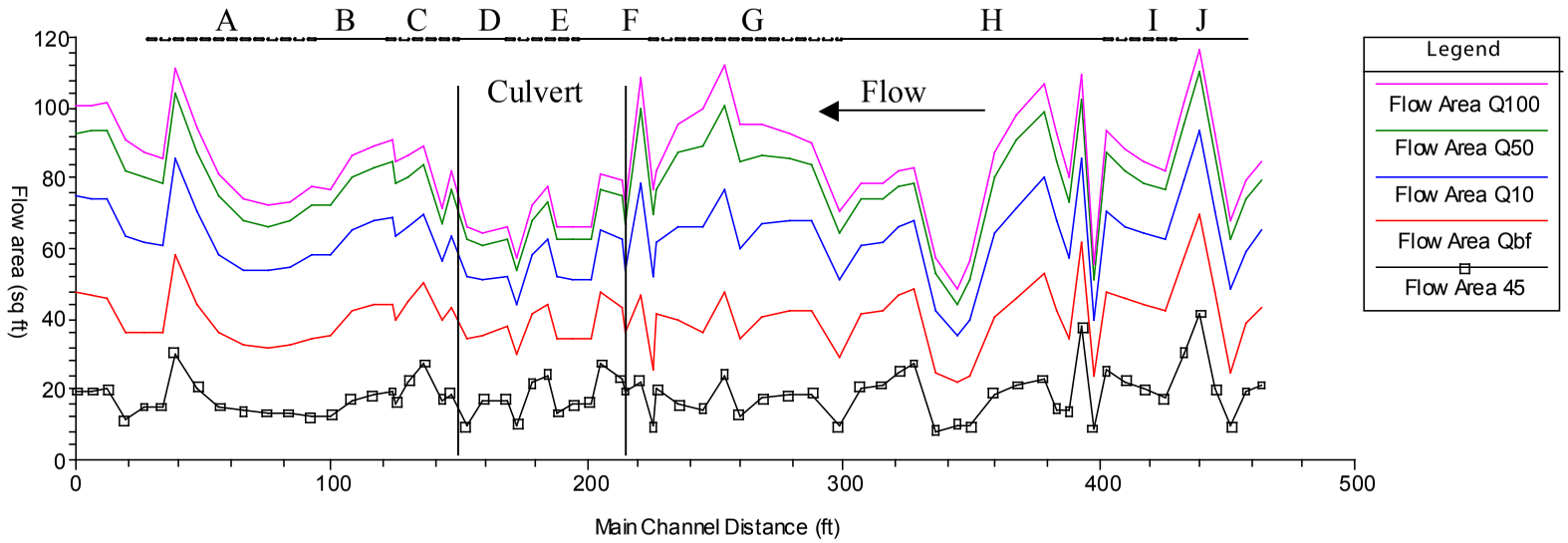

Figure 5—Flow area (total) profile plot.

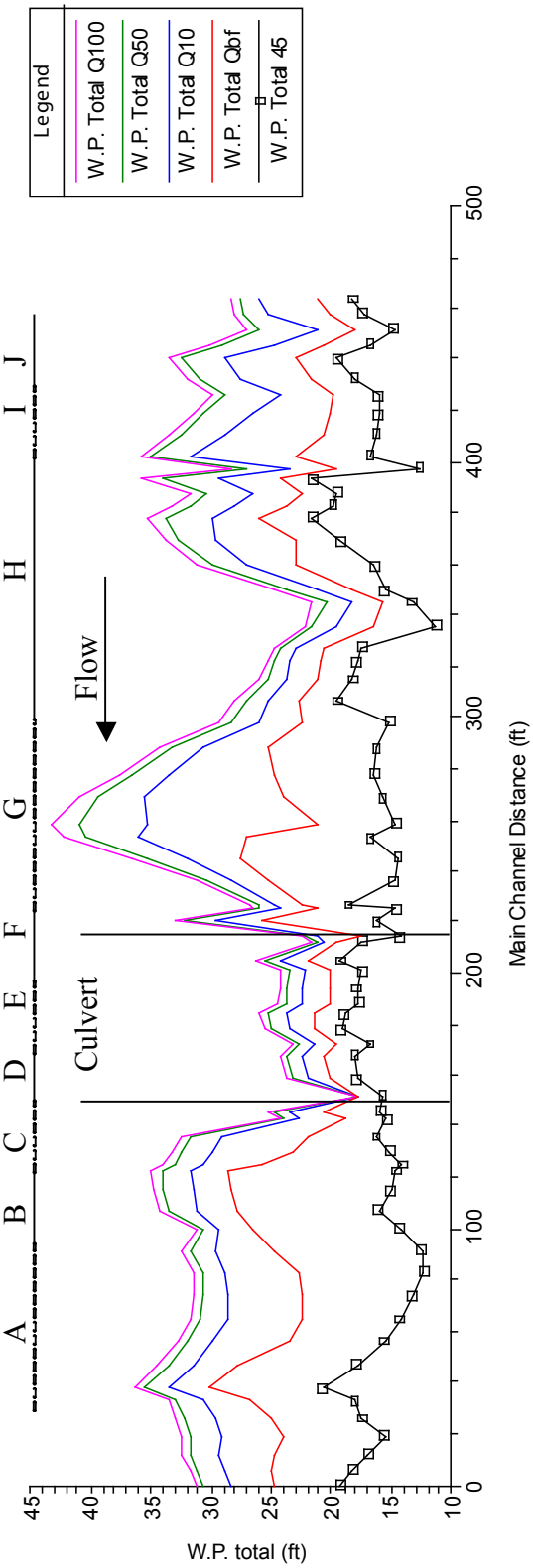

Figure 6—Wetted perimeter.

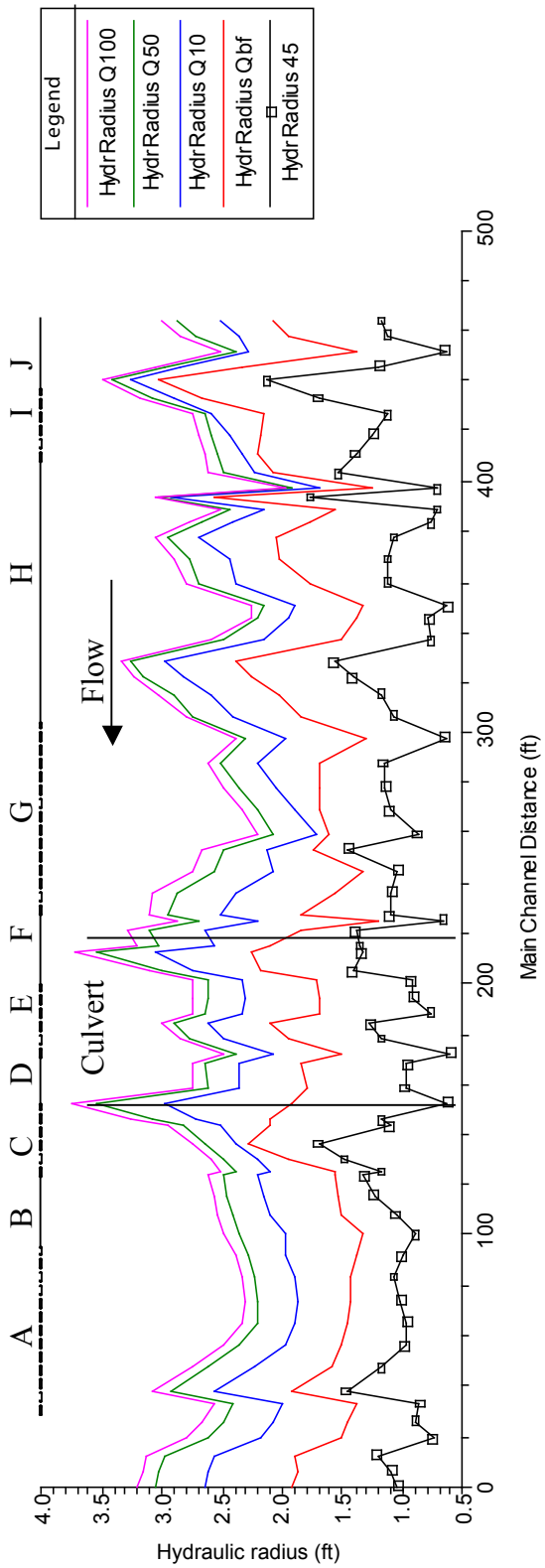

Figure 7—Hydraulic radius.

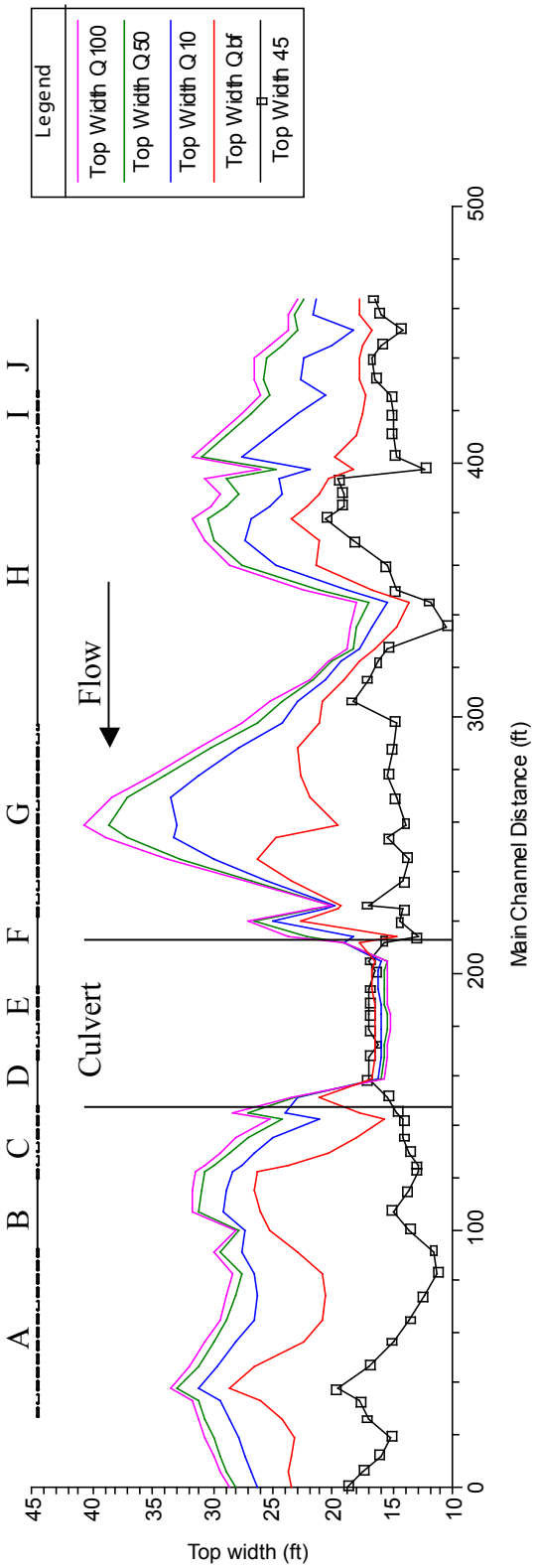

Figure 8—Top width.

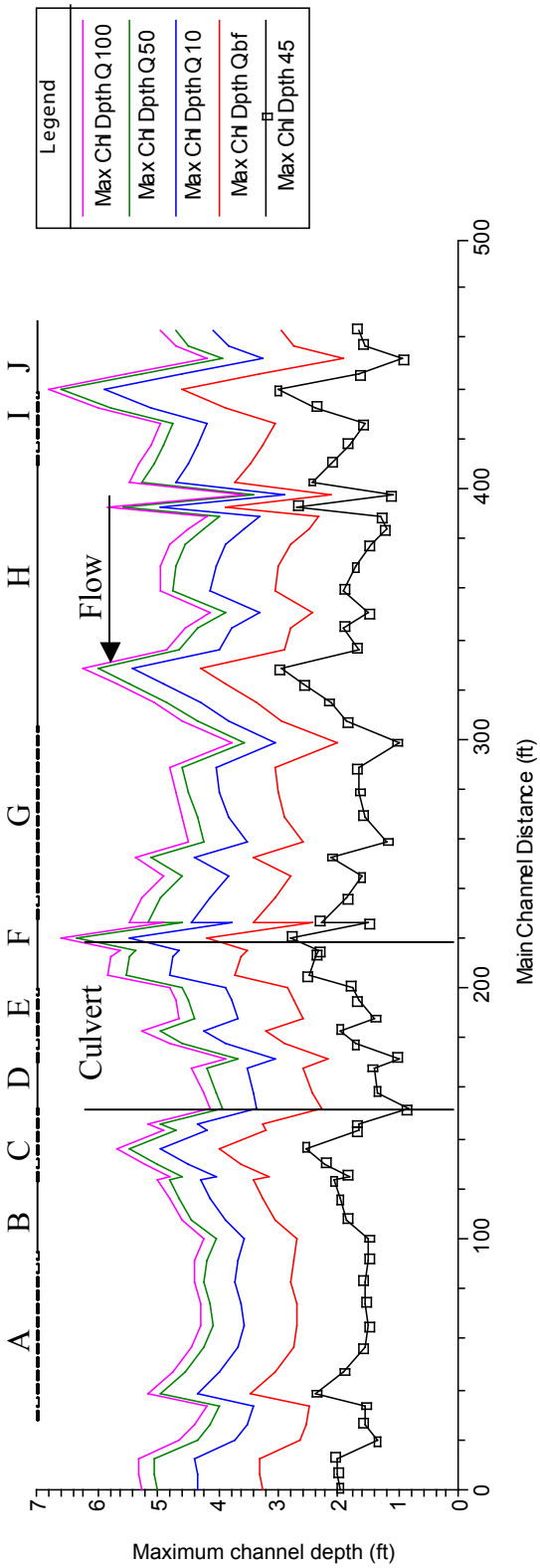

Figure 9—Maximum depth.

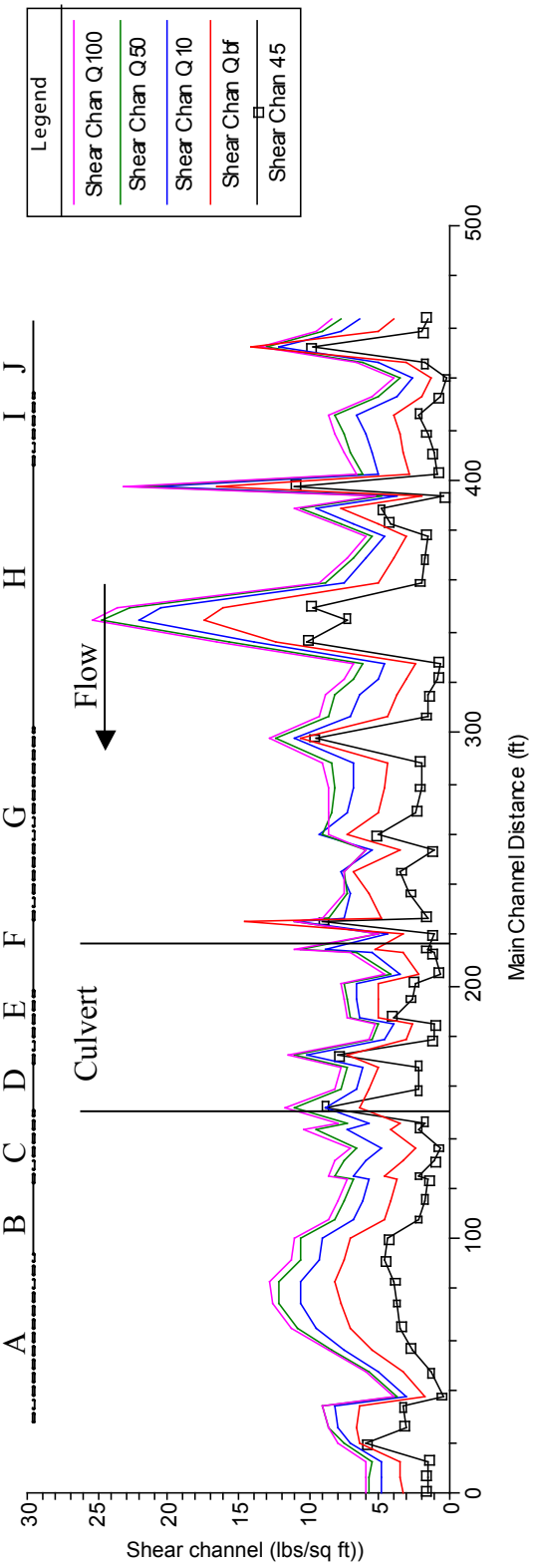

Figure 10—Shear stress (channel) profile.

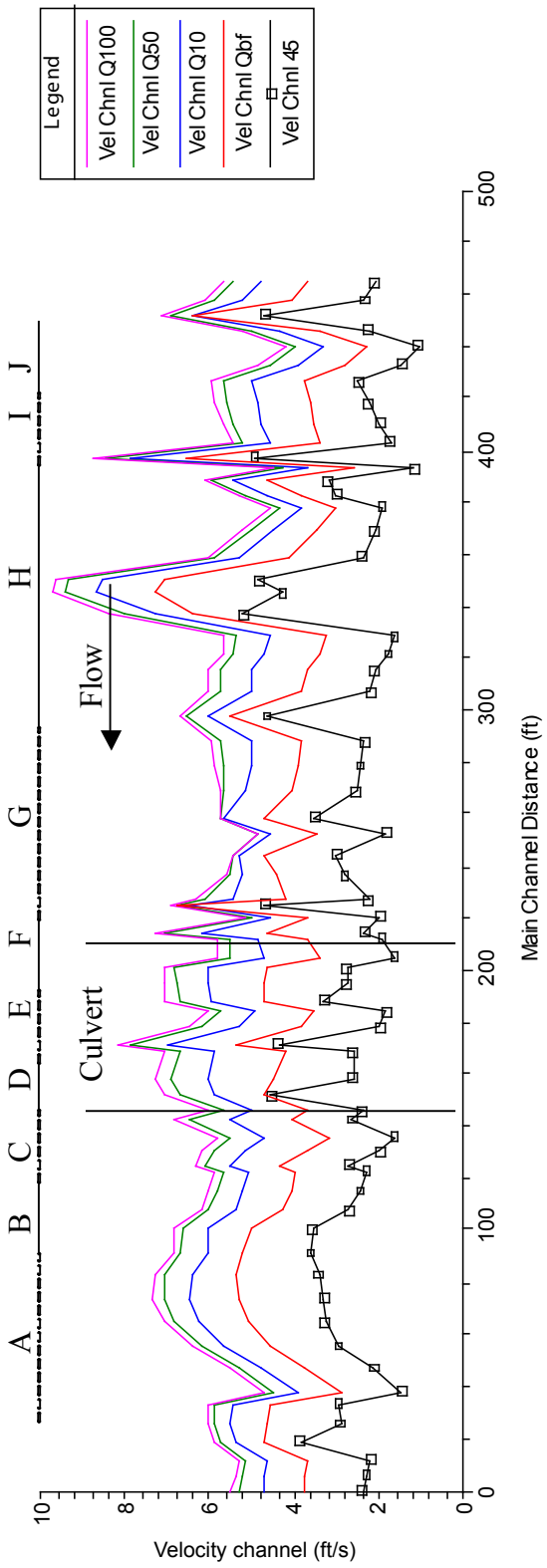

Figure 11—Velocity (channel) profile plot.

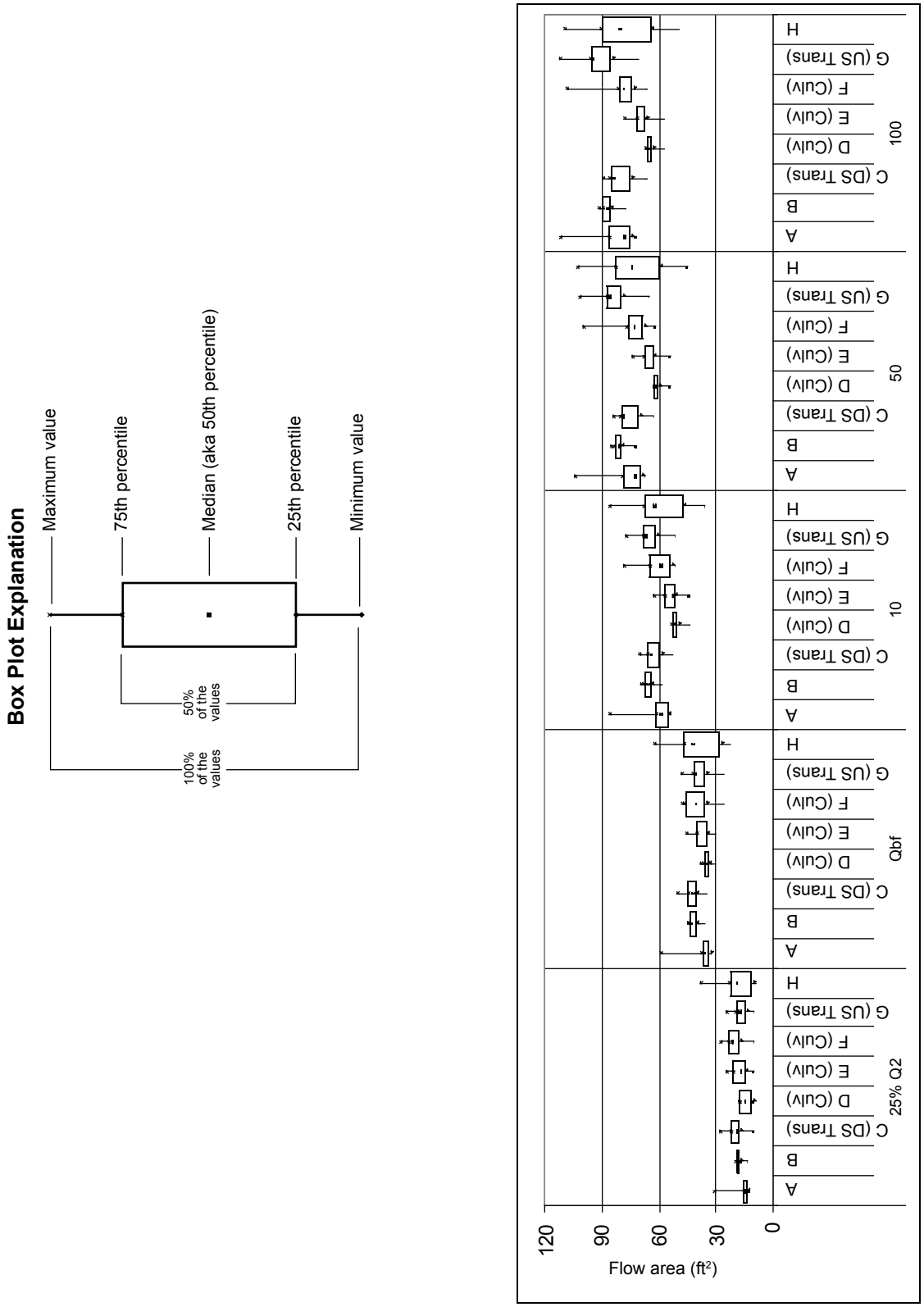

Figure 12—Flow area (total).

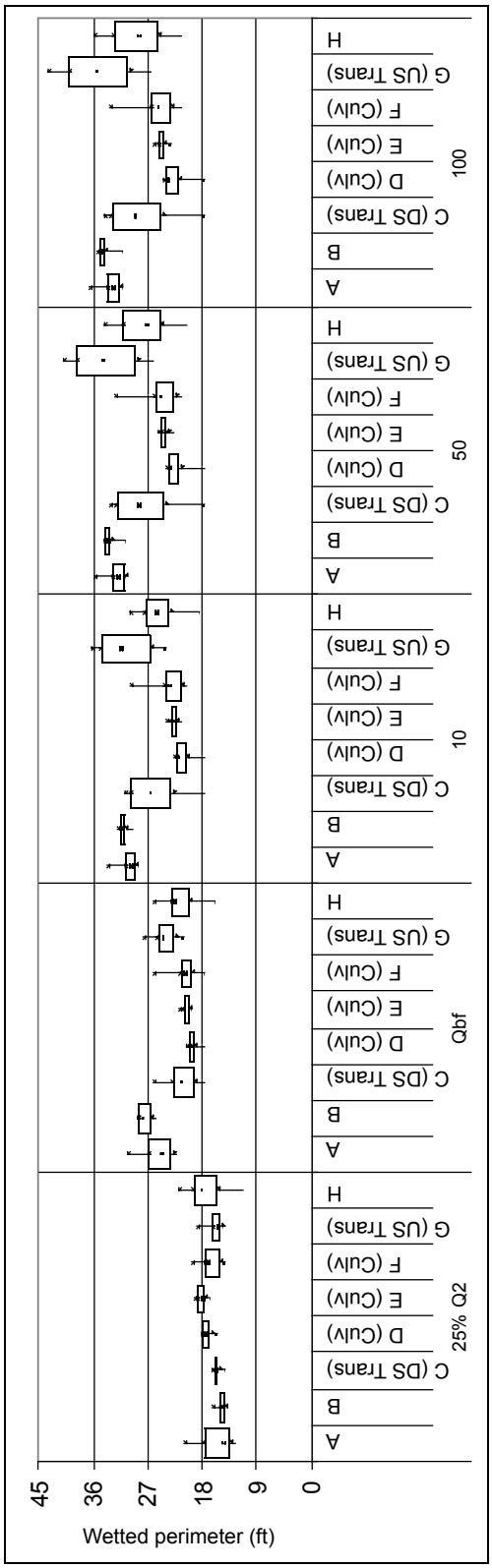

Figure 13—Wetted perimeter.

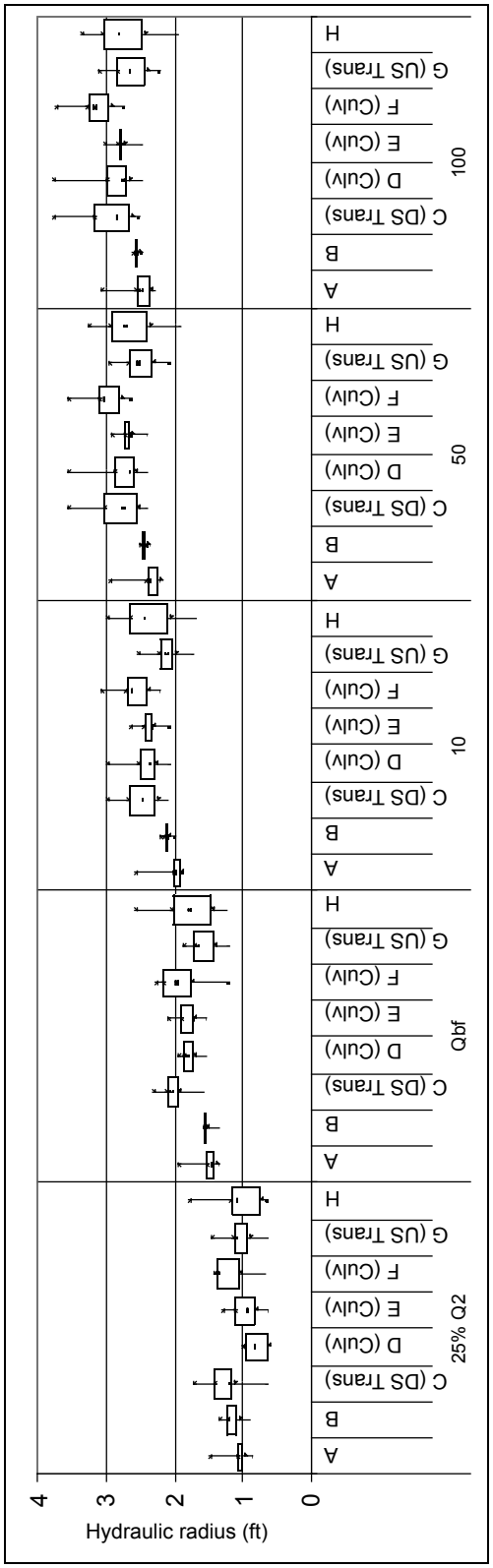

Figure 14—Hydraulic radius.

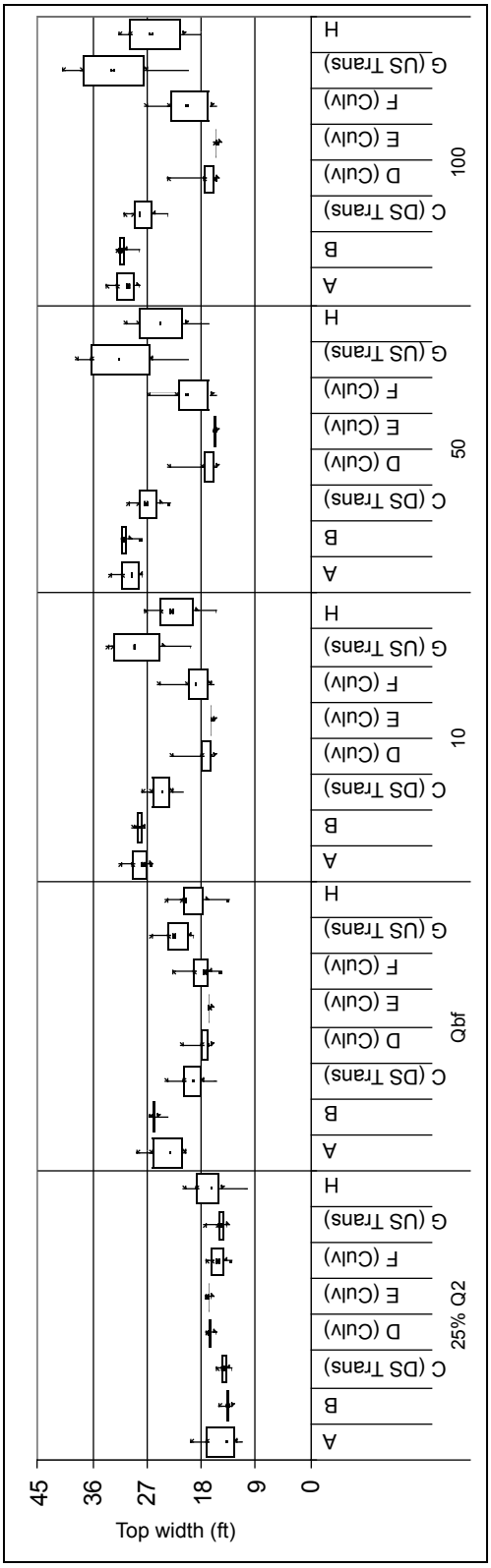

Figure 15—Top width.

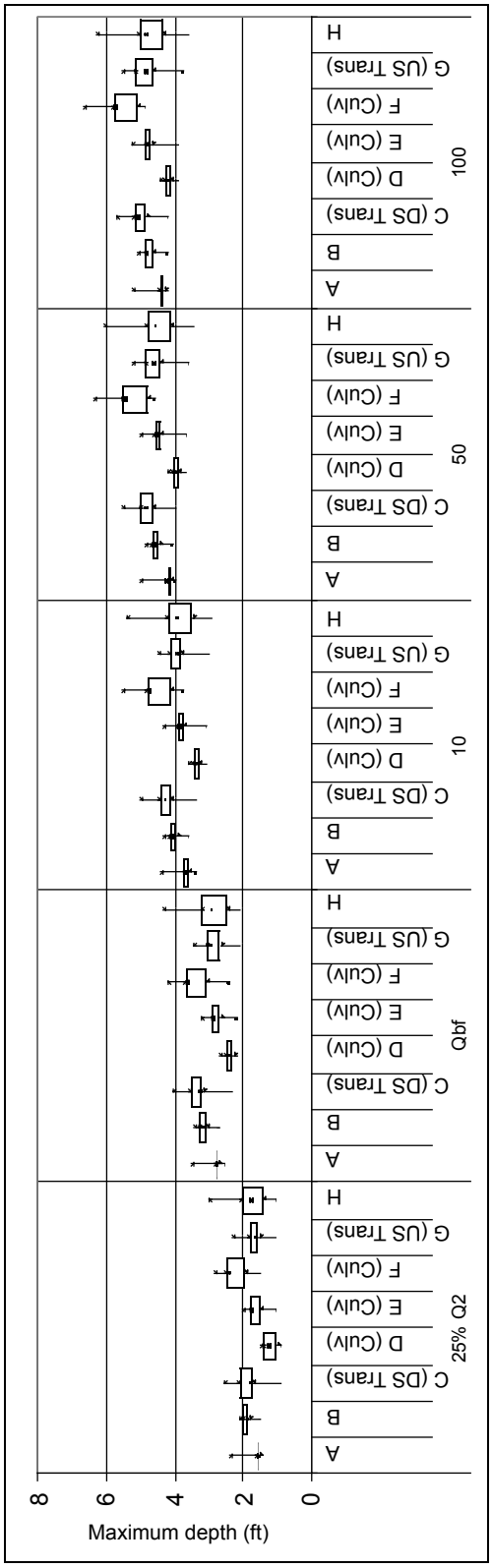

Figure 16—Maximum depth.

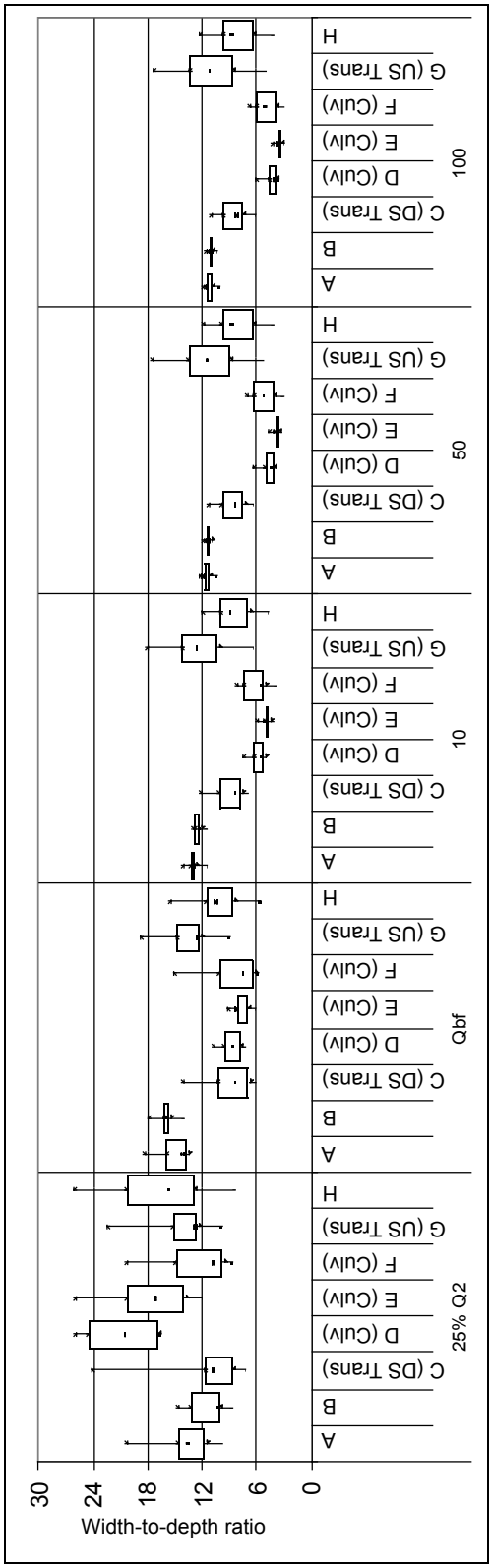

Figure 17—Width-to-depth ratio.

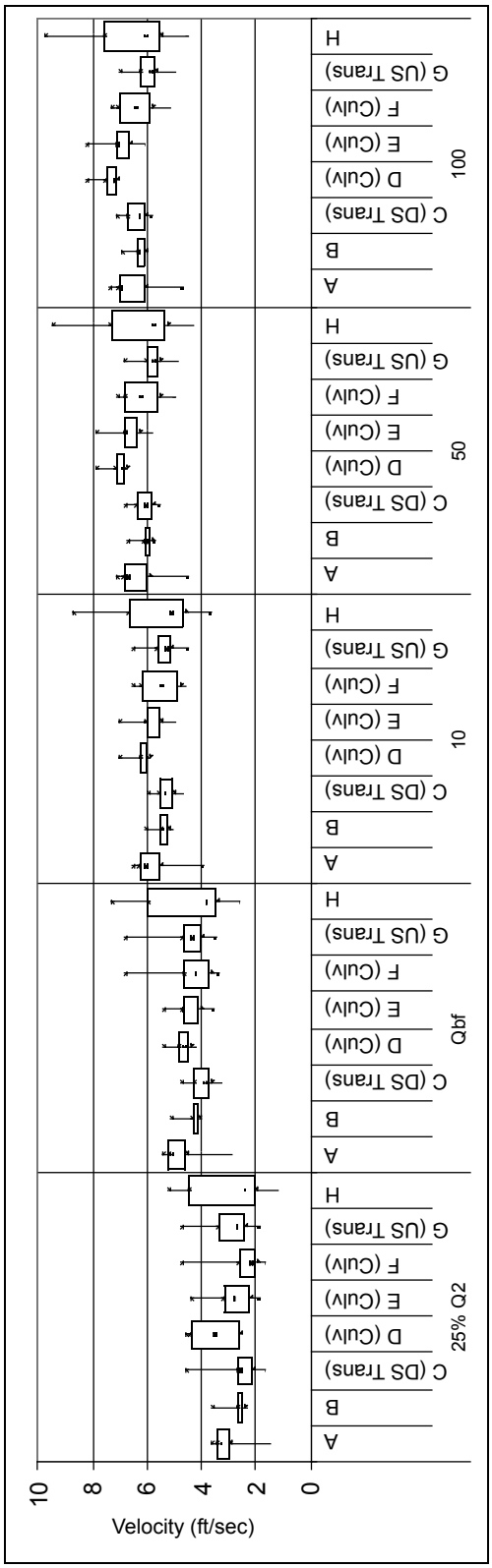

Figure 18—Velocity (channel).

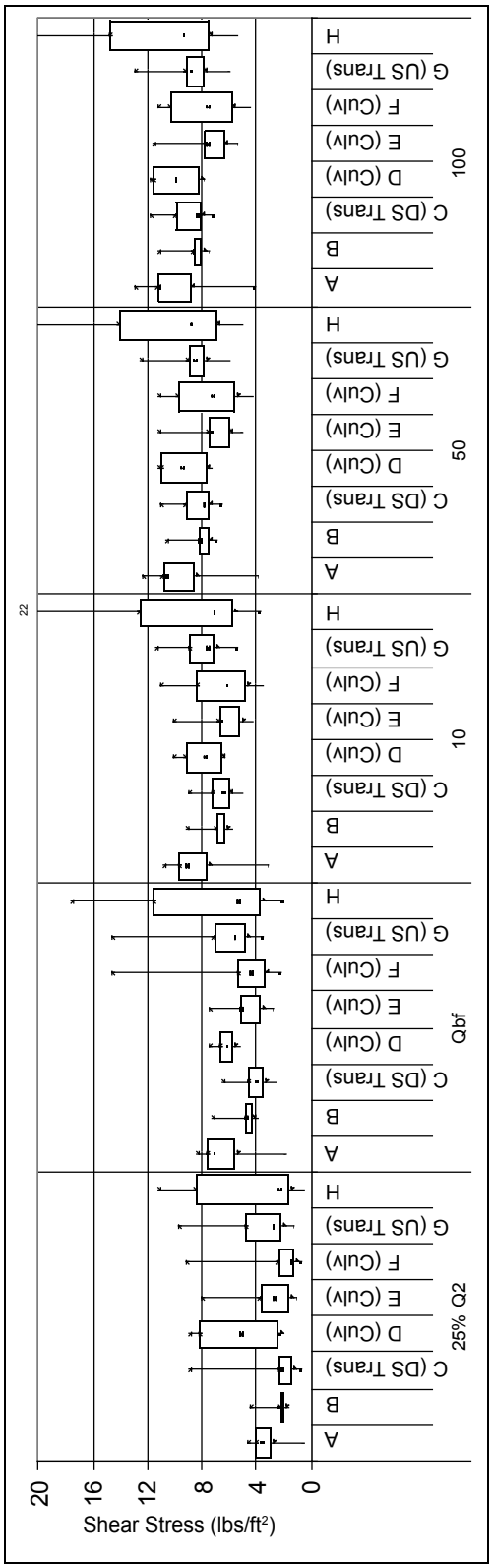

Figure 19—Shear stress (channel).

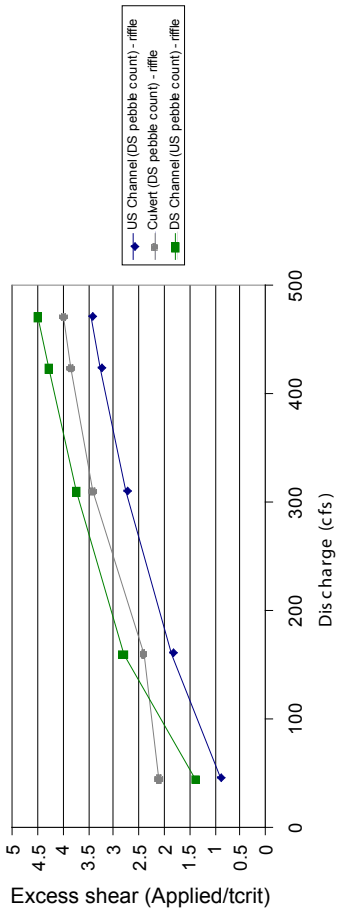

Excess shear stress is the channel shear divided by the critical shear for bed entrainment of the D_{84} particle size. Values of excess shear greater than 1 indicate bed movement for the D_{84} particle size.

Figure 20—Excess shear stress.

Table 3—Sum of squared height difference

Reach	XS Location	Unit type	Sum of squared height difference	Within range of channel conditions?
Culvert	US	Pool	0.10	No
	DS	Riffle	0.03	No
Upstream	US	Pool	0.04	
	DS	Riffle	0.09	
Downstream	US	Riffle	0.04	
	DS	Pool	0.08	

Table 4—Vertical sinuosity

Segment	Location	Vertical Sinuosity (ft/ft)
A	DS channel	1.004
B	DS channel	1.001
C	DS transition	1.007
D	Culvert	1.002
E	Culvert	1.003
F	Culvert	1.015
G	US transition	1.006
H	US channel	1.013
I	US channel	1.003
J	US channel	1.017

Table 5—Depth distribution

Reach	XS Location	25% Q_2	Within range of channel conditions?
Culvert	US	0	No
	DS	0	No
Upstream	US	2	
	DS	1	
Downstream	US	1	
	DS	2	

Table 6—Habitat unit composition

Reach	Percent of surface area			
	Pool	Glide	Riffle	Step
Culvert	24%	0%	76%	0%
Upstream Channel	38%	0%	50%	1%
Downstream Channel	29%	0%	64%	7%

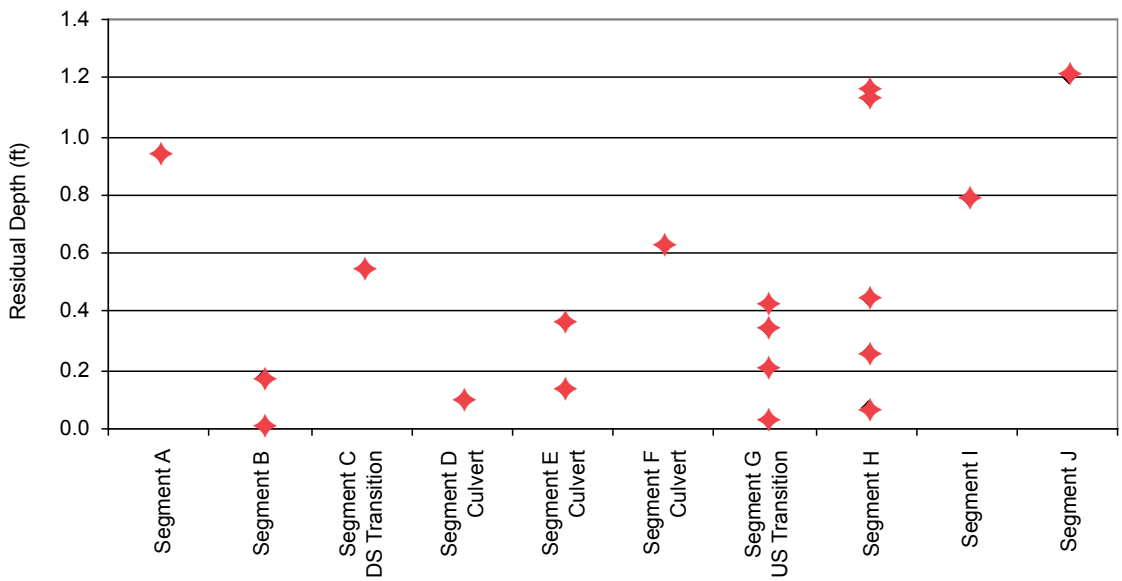

Figure 21—Residual depths.

Table 7—Bed material sorting and skewness

Reach	XS Location	Unit Type	Sorting	Within range of channel conditions?	Skewness	Within range of channel conditions?
Culvert	US	Pool	2.01	No	-0.25	No
	DS	Riffle	1.90	No	0.24	Yes
Upstream	US	Pool	2.35		-0.07	
	DS	Riffle	2.77		0.34	
Downstream	US	Riffle	2.08		0.39	
	DS	Pool	2.44		0.02	

Table 8—Large woody debris

Reach	Pieces/Channel Width
Culvert	0.33
Upstream	3.17
Downstream	3.84

Terminology:

US = Upstream

DS = Downstream

RR = Reference reach

XS = Cross-section

View upstream of culvert outlet.

View downstream towards culvert inlet.

View downstream from roadway.

View upstream from roadway.

Downstream reference reach – pebble count in pool marked with flagging.

Downstream reference reach – upstream pebble count (riffle).

Upstream reference reach – downstream pebble count, riffle.

Upstream reference reach – pebble count in pool above log step.

View upstream within culvert.

View downstream within culvert.

Cross-Section: Upstream Reference Reach – Upstream Pebble Count

Material	Size Class (mm)	Count	Item %	Cumulative %
sand	<2	4	4%	4%
very fine gravel	2 - 4	5	5%	9%
fine gravel	4 - 5.7	5	5%	14%
fine gravel	5.7 - 8	4	4%	18%
medium gravel	8 - 11.3	6	6%	24%
medium gravel	11.3 - 16	13	13%	37%
coarse gravel	16 - 22.6	9	9%	46%
coarse gravel	22.6 - 32	4	4%	50%
very coarse gravel	32 - 45	4	4%	54%
very coarse gravel	45 - 64	4	4%	58%
small cobble	64 - 90	3	3%	61%
medium cobble	90 - 128	5	5%	66%
large cobble	128 - 180	11	11%	77%
very large cobble	180 - 256	8	8%	85%
small boulder	256 - 362	9	9%	94%
small boulder	362 - 512	4	4%	98%
medium boulder	512 - 1024	2	2%	100%
large boulder	1024 - 2048	0	0%	100%
very large boulder	2048 - 4096	0	0%	100%
bedrock	Bedrock	0	0%	100%

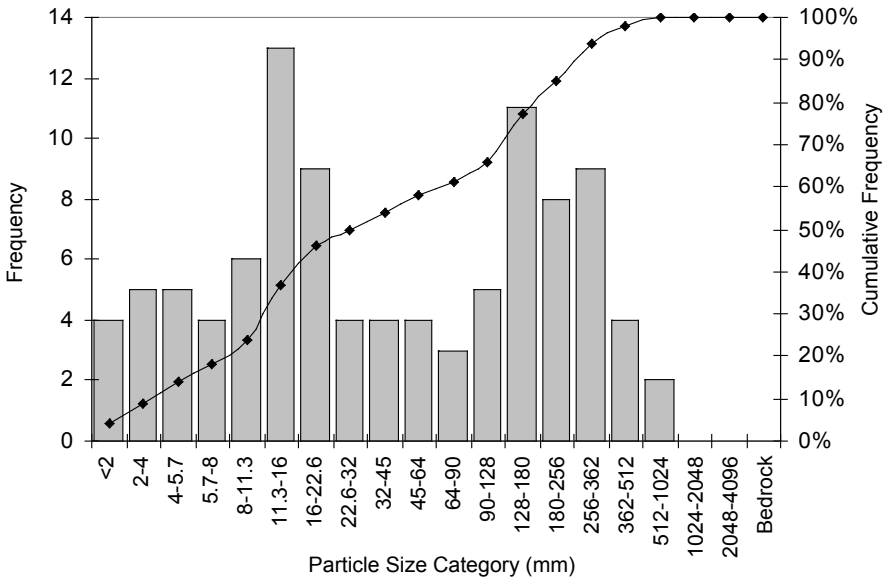

Size Class	Size percent finer than (mm)
D5	3
D16	7
D50	33
D84	250
D95	371
D100	580

Material	Percent Composition
Sand	4%
Gravel	54%
Cobble	27%
Boulder	15%
Bedrock	0%

Sorting Coefficient: 2.35
Skewness Coefficient: -0.07

Cross-Section: Upstream Reference Reach – Downstream Pebble Count

Material	Size Class (mm)	Count	Item %	Cumulative %
sand	<2	7	7%	7%
very fine gravel	2 - 4	3	3%	11%
fine gravel	4 - 5.7	4	4%	15%
fine gravel	5.7 - 8	4	4%	19%
medium gravel	8 - 11.3	1	1%	20%
medium gravel	11.3 - 16	5	5%	25%
coarse gravel	16 - 22.6	5	5%	31%
coarse gravel	22.6 - 32	4	4%	35%
very coarse gravel	32 - 45	3	3%	38%
very coarse gravel	45 - 64	7	7%	45%
small cobble	64 - 90	8	8%	54%
medium cobble	90 - 128	7	7%	61%
large cobble	128 - 180	7	7%	68%
very large cobble	180 - 256	9	9%	78%
small boulder	256 - 362	7	7%	85%
small boulder	362 - 512	2	2%	87%
medium boulder	512 - 1024	9	9%	97%
large boulder	1024 - 2048	0	0%	97%
very large boulder	2048 - 4096	0	0%	97%
bedrock	Bedrock	3	3%	100%

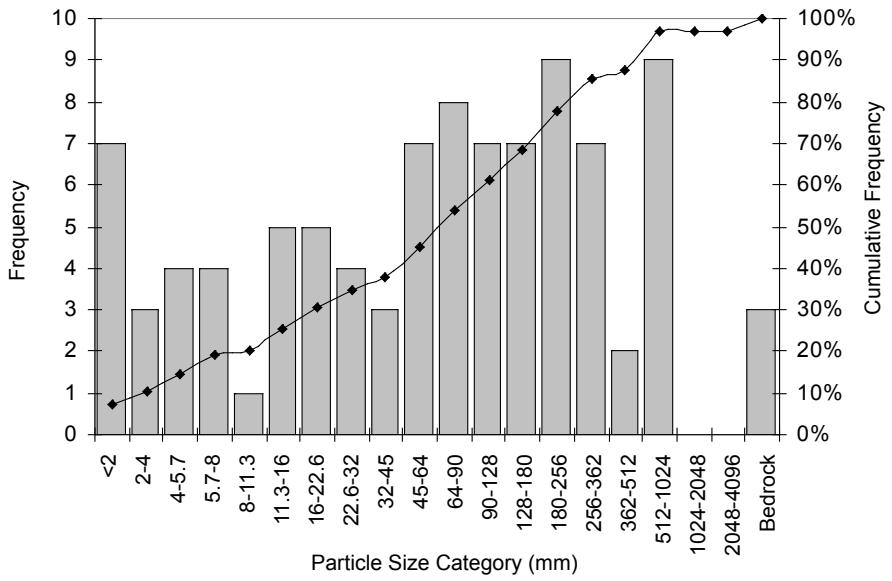

Size Class	Size percent finer than (mm)
D5	1
D16	6
D50	75
D84	274
D95	585
D100	730

Material	Percent Composition
Sand	7%
Gravel	38%
Cobble	33%
Boulder	19%
Bedrock	3%

Sorting Coefficient: 2.77
Skewness Coefficient: 0.34

Cross-Section: Culvert – Upstream Pebble Count

Material	Size Range (mm)	Count	Item %	Cumulative %
sand	<2	5	5%	5%
very fine gravel	2 - 4	4	4%	8%
fine gravel	4 - 5.7	2	2%	10%
fine gravel	5.7 - 8	10	9%	19%
medium gravel	8 - 11.3	9	8%	27%
medium gravel	11.3 - 16	17	15%	43%
coarse gravel	16 - 22.6	11	10%	53%
coarse gravel	22.6 - 32	5	5%	57%
very coarse gravel	32 - 45	8	7%	65%
very coarse gravel	45 - 64	9	8%	73%
small cobble	64 - 90	5	5%	77%
medium cobble	90 - 128	3	3%	80%
large cobble	128 - 180	4	4%	84%
very large cobble	180 - 256	7	6%	90%
small boulder	256 - 362	7	6%	96%
small boulder	362 - 512	0	0%	96%
medium boulder	512 - 1024	0	0%	96%
large boulder	1024 - 2048	0	0%	96%
very large boulder	2048 - 4096	0	0%	96%
bedrock	> 4096	4	4%	100%

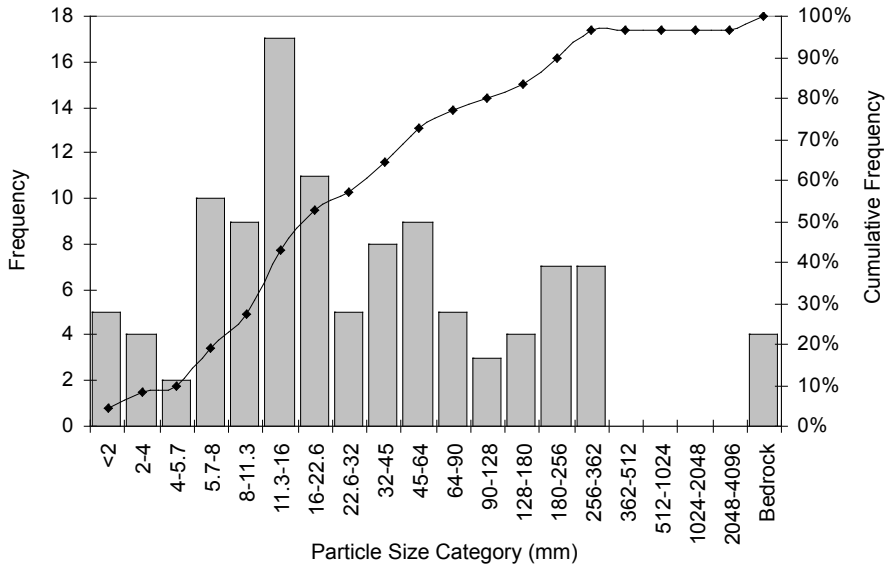

Size Class	Size percent finer than (mm)
D5	3
D16	8
D50	20
D84	134
D95	268
D100	360

Material	Percent Composition
Sand	5%
Gravel	68%
Cobble	17%
Boulder	6%
Bedrock	4%

Sorting Coefficient: 2.01
Skewness Coefficient: -0.25

Cross-Section: Culvert – Downstream Pebble Count

Material	Size Class (mm)	Count	Item %	Cumulative %
sand	<2	2	2%	2%
very fine gravel	2 - 4	3	3%	5%
fine gravel	4 - 5.7	1	1%	6%
fine gravel	5.7 - 8	3	3%	9%
medium gravel	8 - 11.3	2	2%	11%
medium gravel	11.3 - 16	4	4%	15%
coarse gravel	16 - 22.6	3	3%	18%
coarse gravel	22.6 - 32	9	9%	27%
very coarse gravel	32 - 45	9	9%	36%
very coarse gravel	45 - 64	6	6%	42%
small cobble	64 - 90	9	9%	51%
medium cobble	90 - 128	11	11%	62%
large cobble	128 - 180	11	11%	73%
very large cobble	180 - 256	10	10%	83%
small boulder	256 - 362	11	11%	94%
small boulder	362 - 512	5	5%	99%
medium boulder	512 - 1024	1	1%	100%
large boulder	1024 - 2048	0	0%	100%
very large boulder	2048 - 4096	0	0%	100%
bedrock	Bedrock	0	0%	100%

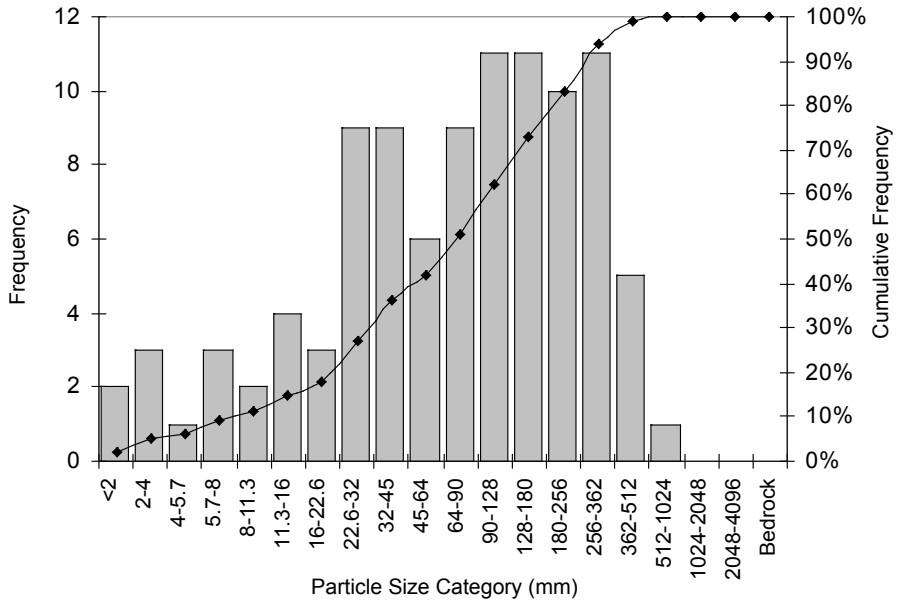

Size Class	Size percent finer than (mm)
D5	5
D16	20
D50	90
D84	260
D95	422
D100	520

Material	Percent Composition
Sand	2%
Gravel	40%
Cobble	41%
Boulder	17%
Bedrock	0%

Sorting Coefficient: 1.90
Skewness Coefficient: 0.24

Cross-Section: Downstream Reference Reach – Upstream Pebble Count

Material	Size Class (mm)	Count	Item %	Cumulative %
sand	<2	3	3%	3%
very fine gravel	2 - 4	5	5%	8%
fine gravel	4 - 5.7	2	2%	10%
fine gravel	5.7 - 8	1	1%	11%
medium gravel	8 - 11.3	1	1%	13%
medium gravel	11.3 - 16	3	3%	16%
coarse gravel	16 - 22.6	6	6%	22%
coarse gravel	22.6 - 32	2	2%	24%
very coarse gravel	32 - 45	4	4%	28%
very coarse gravel	45 - 64	4	4%	32%
small cobble	64 - 90	8	8%	41%
medium cobble	90 - 128	10	10%	51%
large cobble	128 - 180	10	10%	61%
very large cobble	180 - 256	15	16%	77%
small boulder	256 - 362	9	9%	86%
small boulder	362 - 512	11	11%	98%
medium boulder	512 - 1024	2	2%	100%
large boulder	1024 - 2048	0	0%	100%
very large boulder	2048 - 4096	0	0%	100%
bedrock	Bedrock	0	0%	100%

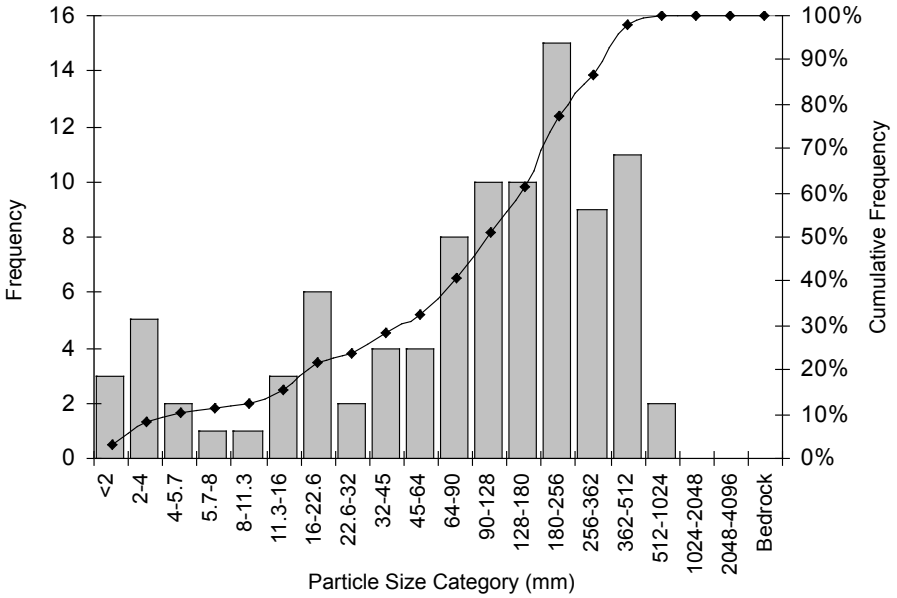

Size Class	Size percent finer than (mm)
D5	3
D16	20
D50	120
D84	330
D95	403
D100	550

Material	Percent Composition
Sand	3%
Gravel	29%
Cobble	45%
Boulder	23%
Bedrock	0%

Sorting Coefficient: 2.08
Skewness Coefficient: 0.39