Deadwood Creek Tributary North

Site Information

Site Location: Coast Range, S Willamette Valley, Deadwood Road

Year Installed: 2000

Lat/Long: 123°40”54.12”W 44°13’21.62”N

Watershed Area (mi²): 0.43

Stream Slope (ft/ft)[1]: 0.0618

Channel Type: Step-pool

Bankfull Width (ft): 16

Survey Date: March 6, 2007

[1]Water surface slope extending up to 20 channel widths up and downstream of crossing.

Culvert Information

Culvert Type: open-bottom arch

Culvert Material: Annular CMP

Culvert Width: 8 ft

Outlet Type: Mitered

Culvert Length: 56 ft

Inlet Type: Mitered

Pipe Slope (structure slope): 0.066

Culvert Bed Slope: 0.063

(First hydraulic control upstream of inlet to first hydraulic control downstream of outlet.)

Culvert width as a percentage of bankfull width: 0.51

Alignment Conditions: Culvert aligned to minimize length under road, thus creating greater slope and necessitating riprap deflector on right bank at inlet and also requiring a riprap step downstream of outlet to control grade.

Bed Conditions: Large material (larger than natural channel) placed in culvert during construction. Large rock step present at inlet.

Pipe Condition: Good condition.

Hydrology

Discharge (cfs) for indicated recurrence interval

25% 2-yr	2-year	Q_{bf}[2]	5-year	10-year	50-year	100-year
10	40	40	58	70	99	111

[2]Bankfull flow estimated by matching modeled water surface elevations to field-identified bankfull elevations.

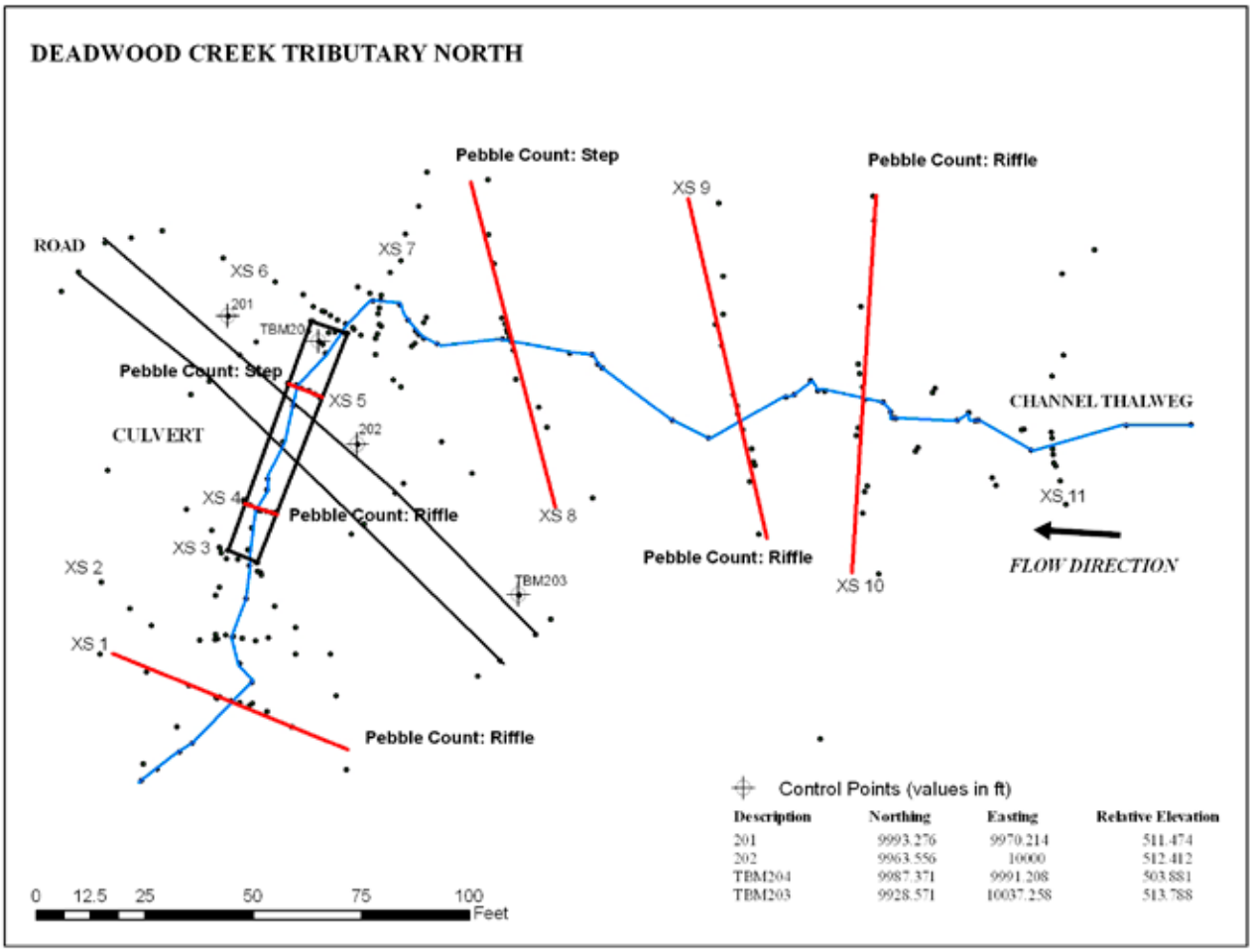

Description	Northing	Easting	Relative Elevation
201	9993.276	9970.214	511.474
202	9963.556	10000	512.412
TBM204	9987.371	9991.208	503.881
TBM203	9928.571	10037.258	513.788

Points represent survey points

Figure 1—Plan view map.

HISTORY

The Deadwood Tributary North culvert was installed in August 2000. Material was placed and "packed" in the culvert using an excavator. The material was 8-inch minus, well-graded, and consisted of a full range of sizes. No significant material sorting or bedform construction was conducted, except for the creation of a minor (3 to 4 inch) thalweg.

The preexisting alignment was considered "stable" with a short culvert. Realignment with the upstream channel to remove the sharp bend at the inlet was considered but the structure would have been steeper and about 120 feet long. The designers chose to avoid lengthening the structure and placed a riprap reflector against the inlet bank to dissipate energy and reflect flow towards the inlet.

The crossing was located at a grade break and had a deep scour pool at the outlet. The channel traveled over root wads dropping 2 to 3 feet in one spot. The designers smoothed the downstream long profile to remove the large drop and placed some 12-inch +/- boulders downstream to improve fish pathway into the culvert.

Since construction, the inlet riprap has been damaged (undermined?) and has failed into the inlet area disrupting and concentrating flow. The downstream channel was not well defined after construction and is believed to create potential fish passage issues.

Maintenance at the site includes foot kicking and hand rolling of material into the downstream channel in an effort to improve channel conditions for fish by concentrating flow and creating a deeper thalweg. There has been minor foot adjustment of material inside the culvert for the same purpose. Small pieces of debris have been removed from the inlet.

The above information furnished by Kim Johansen, USFS.

The flood history at a nearby gauge with a drainage area of 5.7 square miles (USGS #14306340) indicates that the largest event since construction was an approximately 2-year recurrence interval event in 2006.

SITE DESCRIPTION

The Deadwood Tributary (north) culvert is a bottomless arch that is mitered to conform to the road fill. The culvert has exposed concrete footings. The culvert is out of line with the natural channel alignment judging from the valley alignment. Just upstream of the inlet to the culvert, the channel takes a sharp turn to the left, an artifact of the construction of the road and stream crossing. Riprap was placed along the bank here to protect the bank from erosion and to deflect flow into the culvert. Some of this material has failed and has entered the culvert inlet contributing to a large rock step near the inlet (Kim Johansen, USFS, personal communication). After the large rock step at the inlet, the channel drops into a riffle that runs the rest of the length of the culvert. The entirety of the stream through the culvert is made up of highly angular oversized material with a slight fining towards the outlet. Rock steps in the culvert are bigger and more frequent than those found in the reference channel.

The upstream representative channel consisted of a high-gradient step-pool channel with a low active flood-plain surface. The channel sits in a fairly confined and narrow valley but the flood-plain valley width is approximately 2 to 3 channel widths. Evenly graded riffles were interspersed by four steps and plunge pools. Thick vegetation (salmonberry) was encroaching on the channel adding roughness and providing cover and shade.

Downstream of the culvert, there was a steep riprap step and the ability for fish to pass this step is unknown but based on visual observation may be a concern. Below the step, the stream levels off as it enters the flood plain of Deadwood Creek. Large quantities of brush from roadside clearing were present downstream of the crossing.

SURVEY SUMMARY

Eleven cross sections and a longitudinal profile were surveyed along Deadwood Tributary North in March 2007 to characterize the culvert and an upstream representative reach. No downstream reference reach was established due to the proximity of the crossing with the confluence of Deadwood Creek. In the culvert, reference cross sections were taken through the riffle, one at the downstream end of the step and the other in the downstream third of the culvert. Two additional cross sections were surveyed downstream of the culvert to characterize the outlet as well as the expansion of flow. Another two cross sections were surveyed upstream to characterize the inlet as well as the contraction of flow.

Five cross sections were surveyed to characterize the upstream reach; one at the upstream and downstream end, one through a step and two through riffles.

A single representative cross section and pebble count were taken downstream of the riprap step but it was not used in the analysis because of potential backwater influence from Deadwood Creek.

PROFILE ANALYSIS SEGMENT SUMMARY

The profile analysis resulted in a total of 11 profile segments. The culvert consisted of two profile segments. The downstream segment in the culvert was compared to three different representative profile segments in the upstream channel. There was no suitable comparison segment for the upstream segment in the culvert. The upstream transition segment was compared to two representative profile segments in the upstream channel. There was no suitable comparison segment for the downstream transition segment. See figure 2 and table 1.

SCOUR CONDITIONS

Observed conditions

Footing scour – There was no observed scour undermining footings or threatening structure integrity.

Culvert bed adjustment – A step (just downstream of the inlet) has formed from large angular material sourced from riprap that was placed on the right bank upstream of the inlet at construction. There is a scour pool downstream of the step. This step and scour pool have developed since construction of the bed. Angular material is still visible throughout the culvert, suggesting that much of the originally placed material has remained in the pipe.

Profile characteristics – The profile has a convex shape (figure 2). This shape reflects a gradually steepening profile in the downstream direction. The structure is not placed in alignment with the stream valley and instead takes a more direct

line perpendicular across the roadway straight to Deadwood Creek. This shortens the channel length and steepens the profile at the culvert site and downstream.

Residual depths – The one residual depth in the culvert is 0.3 feet, which was in the upstream profile segment that has no comparable slope segment in the representative channel. Nevertheless, the 0.3 feet is within the range of the total population of residual depths from all the representative channel segments, which ranged from 0.06 to 1.3 feet (figure 21). This suggests no significant scour beyond what is found in the channel outside of the crossing.

Substrate – The culvert has more bed material in larger size classes than the natural channel. The natural channel has very few clasts greater than cobble size, whereas the culvert has material up to the "medium boulder" size (greater than 512 millimeters). Greater D_{84} values in the culvert reflect the greater abundance of large material. Sorting values are within the range of the natural channel, but the upstream cross section in the culvert has a lower skewness value than the any skewness value in the natural channel. Pebble counts are provided at the end of the site summary.

Predicted conditions

Cross-section characteristics – Cross-sectional flow area, wetted perimeter, and top width are considerably reduced by the culvert (figure 5, figure 6, figure 8). Conditions are similar at the 25 percent Q_2 (except for top width) but diverge beginning at the Q_2 and higher. The box plots indicate that flow area, wetted perimeter, top width, and width-to-depth are much lower in the culvert when compared to comparable slope segments in the natural channel. Maximum depth and hydraulic radius in the culvert are mostly within the range of that found in comparable slope segments. Cross-section characteristics in the upstream transition do not vary substantially from comparable slope segments except for hydraulic radius and maximum depth, which indicates deeper flow than in the natural channel, especially at higher flows.

Shear stress – Shear stress appears to increases in the culvert compared to the upstream channel (figure 10) and then increases even more just downstream of the culvert. When compared to comparable slope segments, the culvert shear stress values are mostly within the range of natural channel conditions (figure 19); however, the maximum value for shear in the culvert is nearly twice the maximum value found in any of the comparable slope segments. The upstream transition segment shear is also within the range of its comparable slope segments.

Excess shear – The excess shear analysis shows that the potential for bed mobilization in the culvert is mostly within the range of that in the natural channel (figure 20).

Velocity – Although velocity appears to generally increase within the culvert and just downstream (figure 11), the culvert velocity is mostly within the range of velocity of the comparable slope segments (figure 18), with the exception being a greater maximum velocity in the culvert than in the comparable segments. Velocity in the upstream transition is also mostly within the range of that found in comparable slope segments, except with greater maximum velocities in the transition area.

Scour summary

The culvert shows no significant bed scour. The only obvious bed adjustment has been the failure of material into the inlet from bank riprap upstream of the inlet. This feature has created

a step near the inlet, but has not compromised culvert function or capacity to transmit the modeled flood flows. There was no footing scour observed during the survey and residual depths in the culvert are within the range of the natural channel.

Cross-section characteristics indicate there is flow constriction created by the culvert, which is expressed as a reduction in flow width, area, and wetted perimeter. Velocity and shear stress appear to increase at the crossing (and just downstream) (figure 10, figure 11), but these metrics are not significantly out of range of channel conditions when compared to comparable slope segments (figure 18, figure 19). The only potential exceptions are that maximum shear and velocity values in the culvert are greater than those found in comparable slope segments. The excess shear analysis however, does not show increased potential for bed movement because of the larger culvert D_{84}.

This site has been affected by a culvert alignment that takes a more direct line to Deadwood Creek than the original stream alignment, resulting in a steeper grade at the crossing and downstream. This steep gradient may be the cause of the higher maximum shear and velocity in the culvert, yet the culvert bed has similar stability as the natural channel due to the placement of coarse material in the culvert during construction.

At the time of the survey, the culvert had likely only experienced about a 2-year flood event; and therefore empirical evidence of culvert response to larger flood flows is not yet available.

It should be noted that the results based on hydraulic modeling must be tempered by the steepness of the channel and the associated potential uncertainty with HEC-RAS modeling at such a steep site.

AOP CONDITIONS

Cross-section complexity – The sum of squared height differences in the culvert cross sections are both within the range of those in the channel cross sections (table 3).

Profile complexity – Vertical sinuosity values in the culvert segments are low compared to the natural channel. This reflects the mostly plane-bed nature of the culvert bed. The upstream and downstream transition segments have greater vertical sinuosity and are more within the range of that found in the channel outside the crossing. The exception is upstream transition segment E, which has higher vertical sinuosity than anything found in the natural channel (table 4).

Depth distribution – There is significantly less channel margin habitat in the culvert compared to the channel at the 25-percent Q_2 (table 5).

Habitat units – There is similar habitat unit composition between the culvert and the channel outside the crossing (table 6). It should be noted that the culvert is comprised of only one pool, one riffle, and one step.

Residual depths – The one residual depth in the culvert is 0.3 feet, which was in the upstream profile segment that has no comparable slope segment in the representative channel. Nevertheless, the 0.3 feet is within the range of the total population of residual depths from all the representative channel segments, which ranged from 0.06 to 1.3 feet (figure 21).

Bed material – As mentioned previously under scour conditions, the culvert has more bed material in larger size classes than the natural channel (up to “medium boulders” in the culvert compared to “very large cobbles” in the channel). The culvert also has less fine material, with 4 to

12 percent less than 2 millimeters in the natural channel and 1 to 2 percent less than 2 millimeters in the culvert.

Large woody debris – There was no LWD present in the culvert (table 8). The representative channel had moderate to high LWD abundance. LWD formed steps and scour pools in the channel outside the crossing and played a primary role in habitat unit creation and complexity. Features in the culvert did not mimic the role of wood in the natural channel.

AOP summary

AOP conditions appear less suitable in the culvert when compared to the natural channel upstream. Cross-section complexity values are similar, but thalweg complexity (vertical sinuosity) is less in the culvert. This matches site observations of a uniform, plane-bed channel throughout most of the culvert length (except for the one step near the inlet). Depth distribution is significantly less in the culvert, suggesting that shallow margin habitat needed for fish passage may be limited in the culvert. Although habitat units and residual pool depths in the culvert are similar to the natural channel, the culvert only has one short pool and one short step and most of the entire pipe is one long riffle, with wall-to-wall flow and no defined thalweg. This lack of complexity may impair fish passage. The presence of boulders in the pipe may provide velocity refuge for migrating fish; however, the coarse angular material and a lack of fines may increase the tendency for subsurface flow during low-flow periods, which may obstruct fish passage during the summer.

Currently, the steep riprap step downstream of the outlet may not be passable by upstream migrating fish.

DESIGN CONSIDERATIONS

The culvert currently has no significant scour issues. The only bed adjustment (failure of riprap into inlet) may even have served to increase bed complexity and passage conditions. The results indicate that the site should be able to function similarly to the natural channel with respect to scour.

With respect to AOP, conditions in the culvert appear less suitable than the channel outside the crossing. Construction of step sequences in the culvert would be more favorable to fish passage than the current plane bed that provides little velocity refuge for migrating fish. No channel banks were constructed in the culvert and flow was wall-to-wall during the survey. Concentrating flow into a more defined thalweg through construction of channel banks would aid in fish passage and would provide banks for terrestrial organism passage. Use of a wider culvert would have provided more ability to provide these features. Construction of step sequences would improve passage in the downstream channel, where upstream passage is likely currently blocked by the steep riprap step.

At a more fundamental level, placement of the crossing more in line with the valley alignment would have avoided steepening of the channel and would have provided a more suitable (i.e., lower) gradient for fish passage.

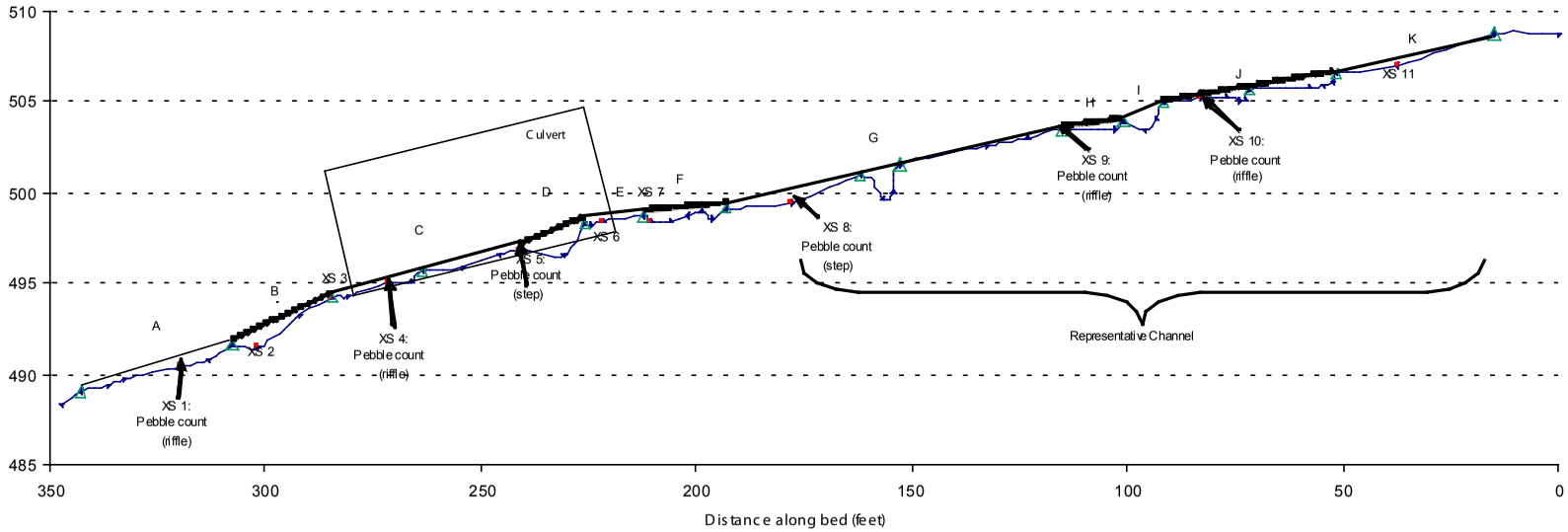

Figure 2—Deadwood Tributary North longitudinal profile.

- Surveyed profile points
- Field-surveyed cross-section locations
- Hydraulic controls

Table 1—Segment comparisons

Segment	Segment Length (ft)	Segment Gradient
A	35	0.071
B	23	0.113
C	44	0.060
D	15	0.094
E	14	0.037
F	19	0.019
G	78	0.056
H	14	0.033
I	9	0.108
J	40	0.041
K	37	0.059

Culvert Segment	Representative Channel Segment	% Difference in Gradient
C	G	7.8%
C	J	2.0%
C	K	1.8%
Upstream Transition		
E	J	9.1%
E	H	11.5%

Table 2. Summary of segments used for comparisons

Segment	Range of Manning's n values[1]	# of measured XSs	# of interpolated XSs
C	0.1232-0.1478	3	5
E	0.1217-0.1247	1	2
G	0.1267-0.1360	2	9
H	0.1359-0.1360	1	2
J	0.1277-0.1356	1	6
K	0.1247-0.1277	1	5

[1]Obtained using equation from Jarrett (1984): $n = 0.39S^{0.38}R^{-0.16}$, where S=stream slope; R=hydraulic radius. Jarrett's equation only applied within the following ranges: S = 0.002 to 0.08, R = 0.5 ft to 7 ft. For cross sections outside these ranges, n was computed either from adjacent sections that fell within the ranges, using the guidance of Arcement and Schneider (1987), or from the HEC-RAS recommendations for culvert modeling.

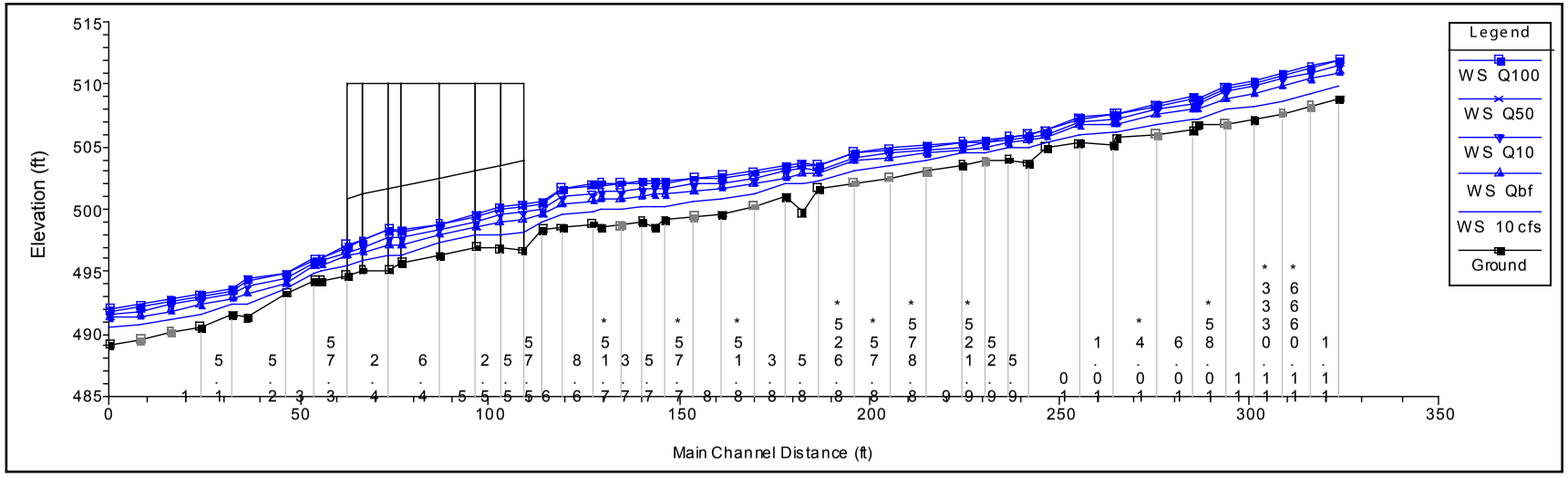

Stations with decimal values are interpolated cross sections placed along the surveyed profile.

Figure 3—HEC-RAS profile.

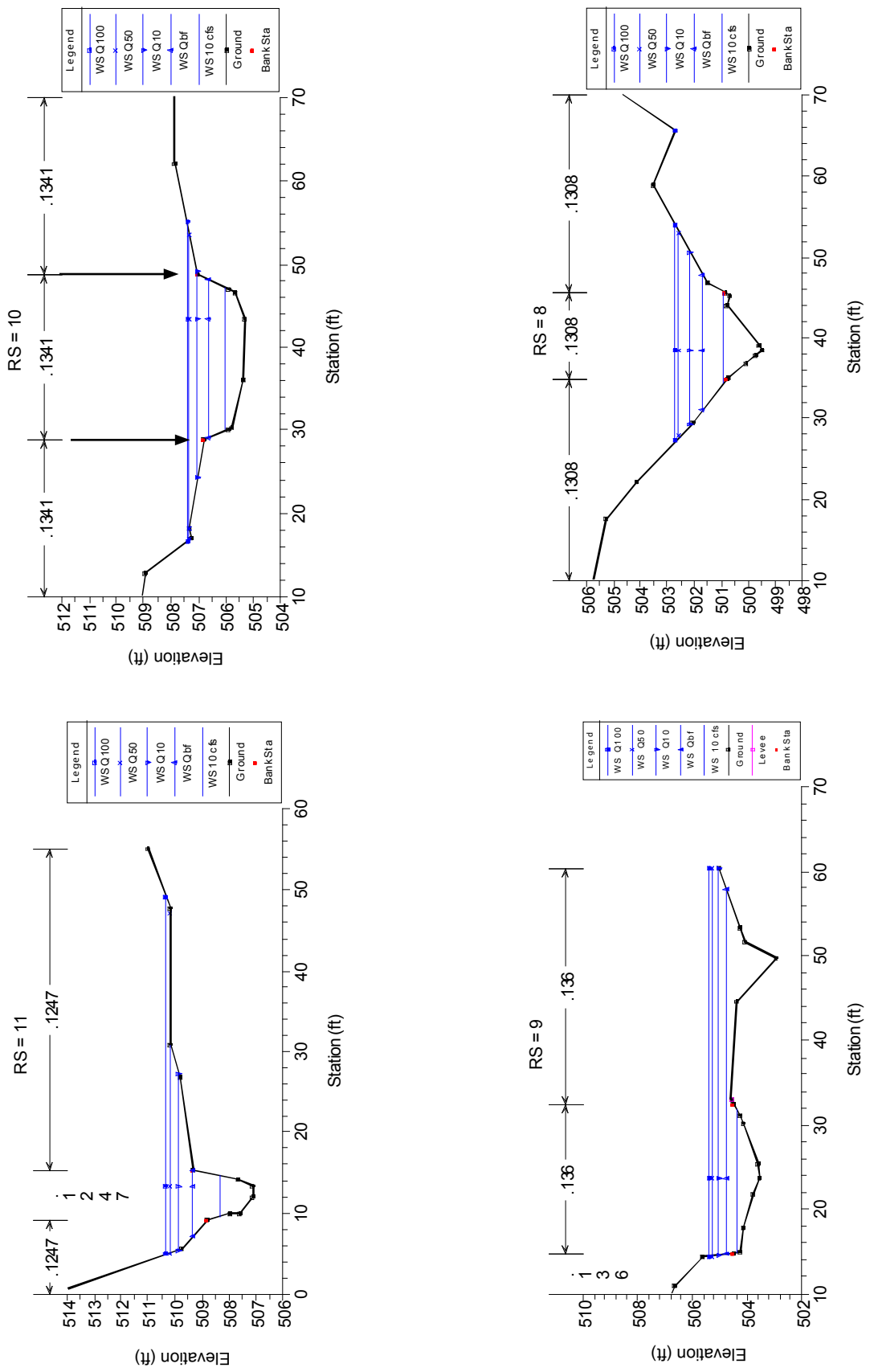

Figure 4—Cross-section plots. Only measured cross sections are included. Manning's n values are included at the top of the cross section. The stationing (RS) corresponds to the stationing on the HEC-RAS profile. Green arrows define the ineffective flow areas. Black arrows represent points identified in the field as the bankfull channel boundary. Only those points identified in the field and supported by hydraulic and topographic analyses are shown below.

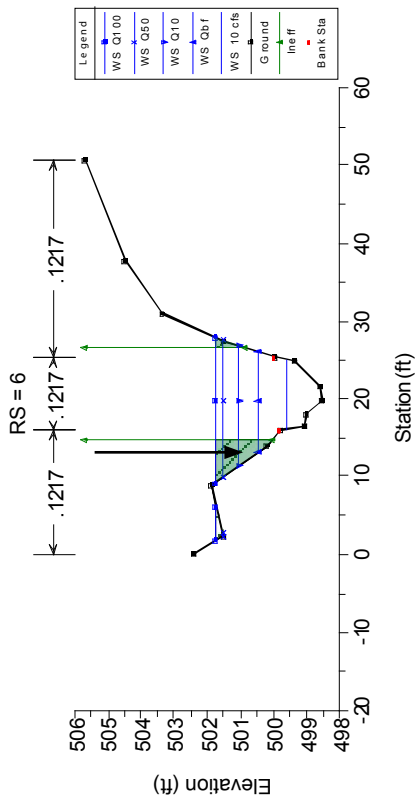

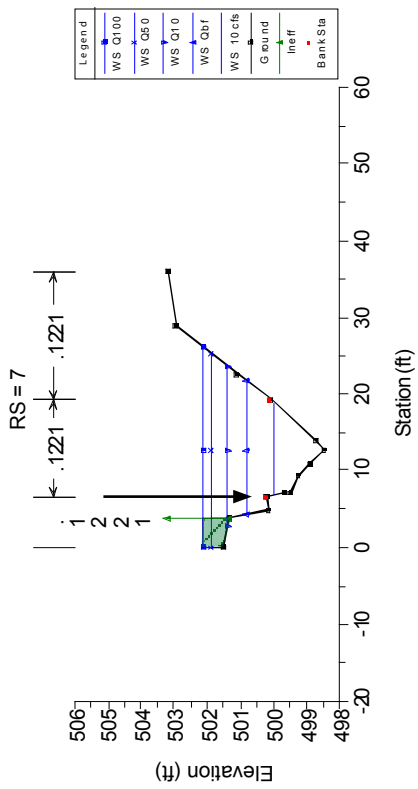

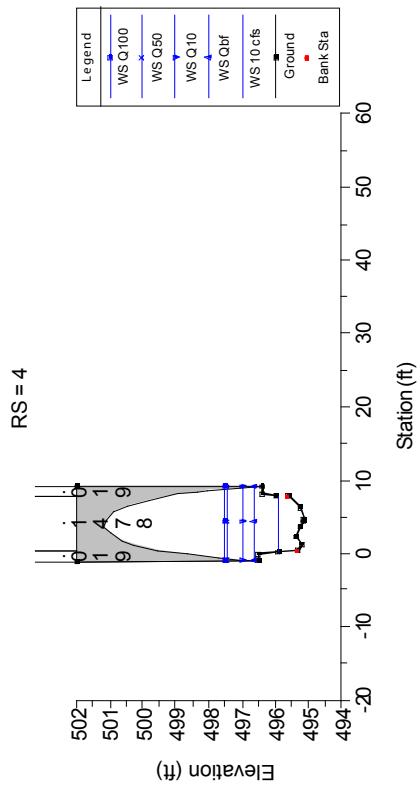

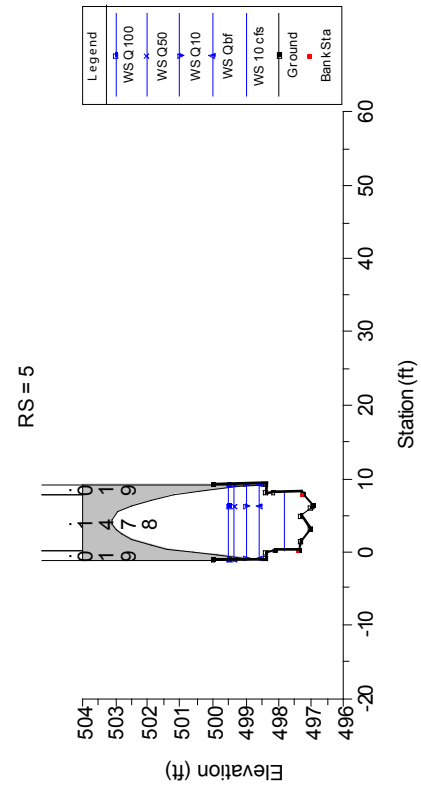

Figure 4—Cross-section plots. Only measured cross sections are included. Manning's n values are included at the top of the cross section. The stationing (RS) corresponds to the stationing on the HEC-RAS profile. Green arrows define the ineffective flow areas. Black arrows represent points identified in the field as the bankfull channel boundary. Only those points identified in the field and supported by hydraulic and topographic analyses are shown below. (continued)

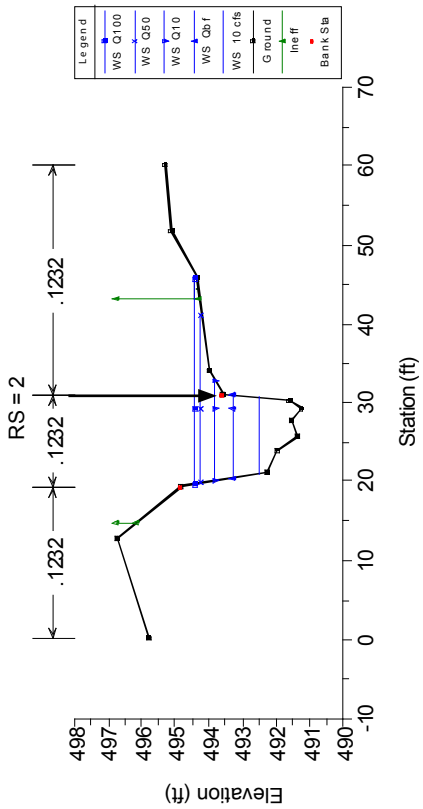

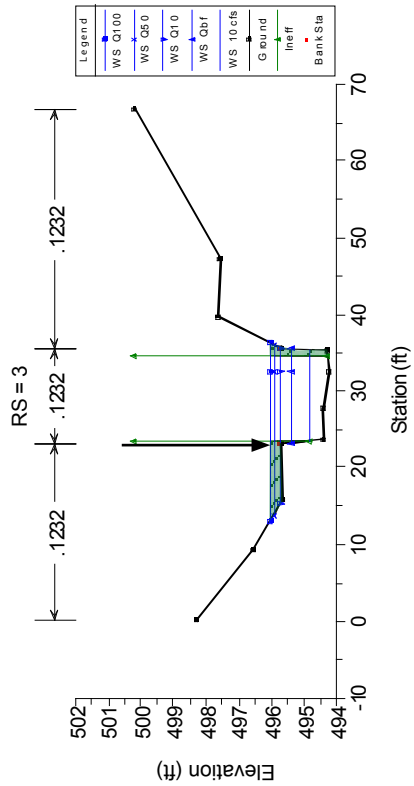

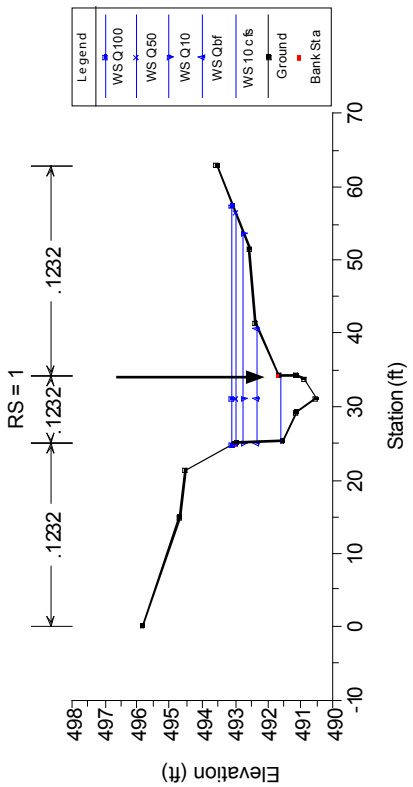

Figure 4—Cross-section plots. Only measured cross sections are included. Manning's n values are included at the top of the cross section. The stationing (RS) corresponds to the stationing on the HEC-RAS profile. Green arrows define the ineffective flow areas. Black arrows represent points identified in the field as the bankfull channel boundary. Only those points identified in the field and supported by hydraulic and topographic analyses are shown below. (continued)

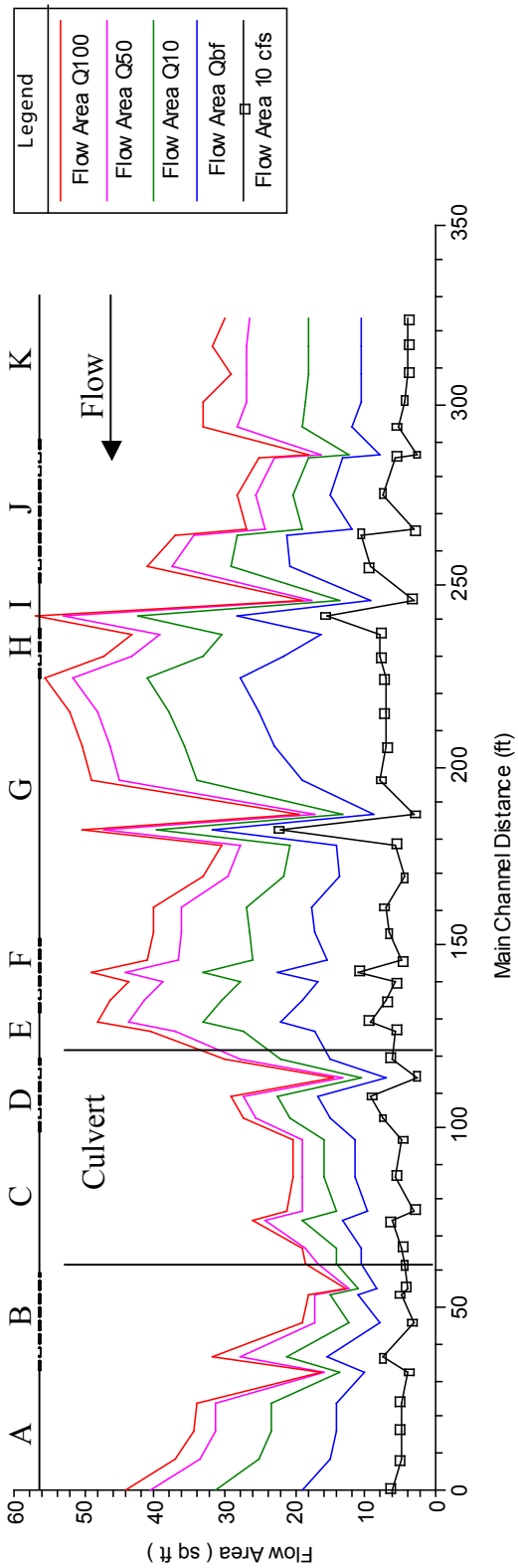

Figure 5—Flow area (total) profile plot.

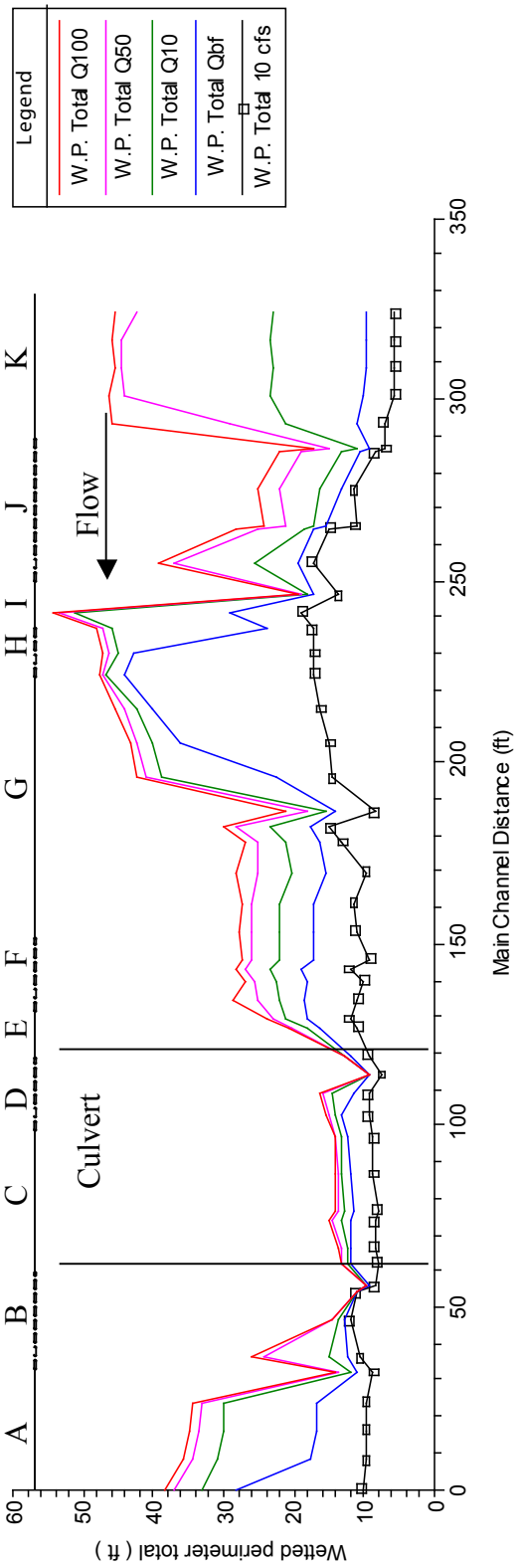

Figure 6—Wetted perimeter.

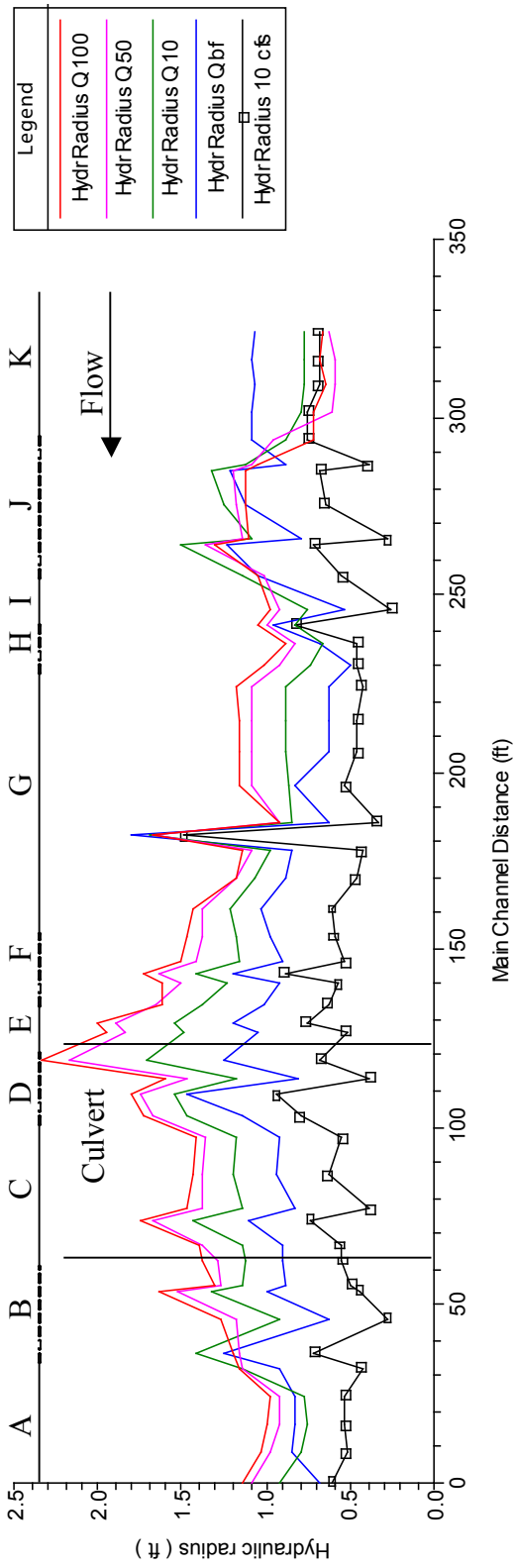

Figure 7—Hydraulic radius.

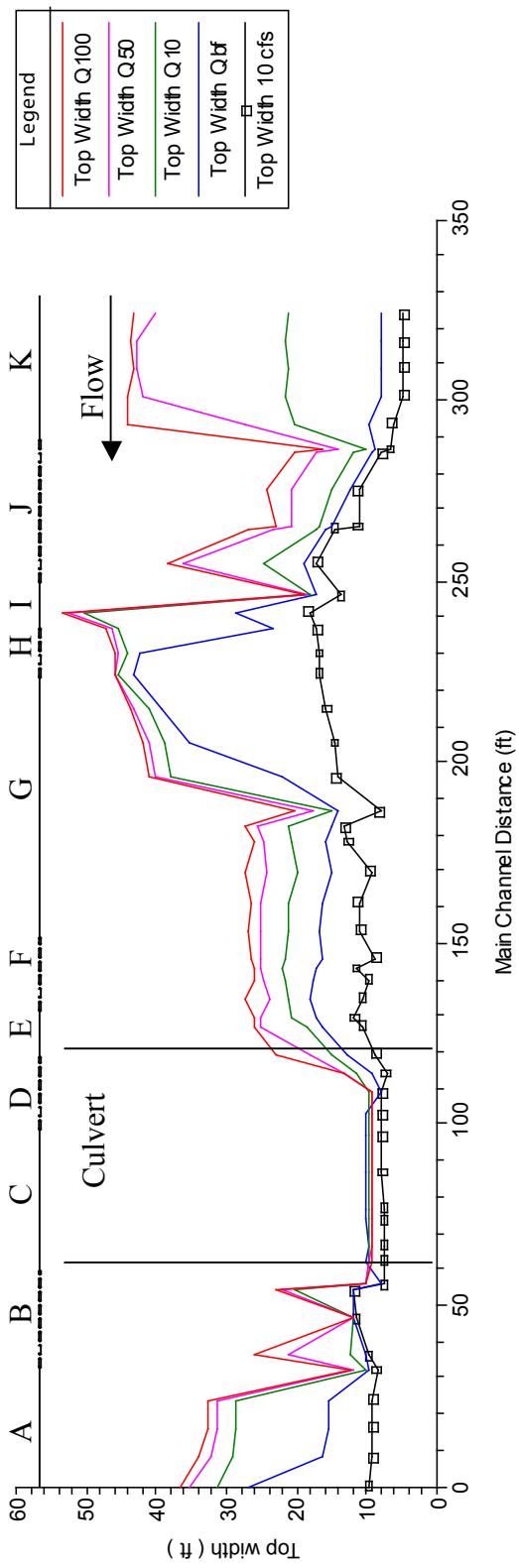

Figure 8—Top width.

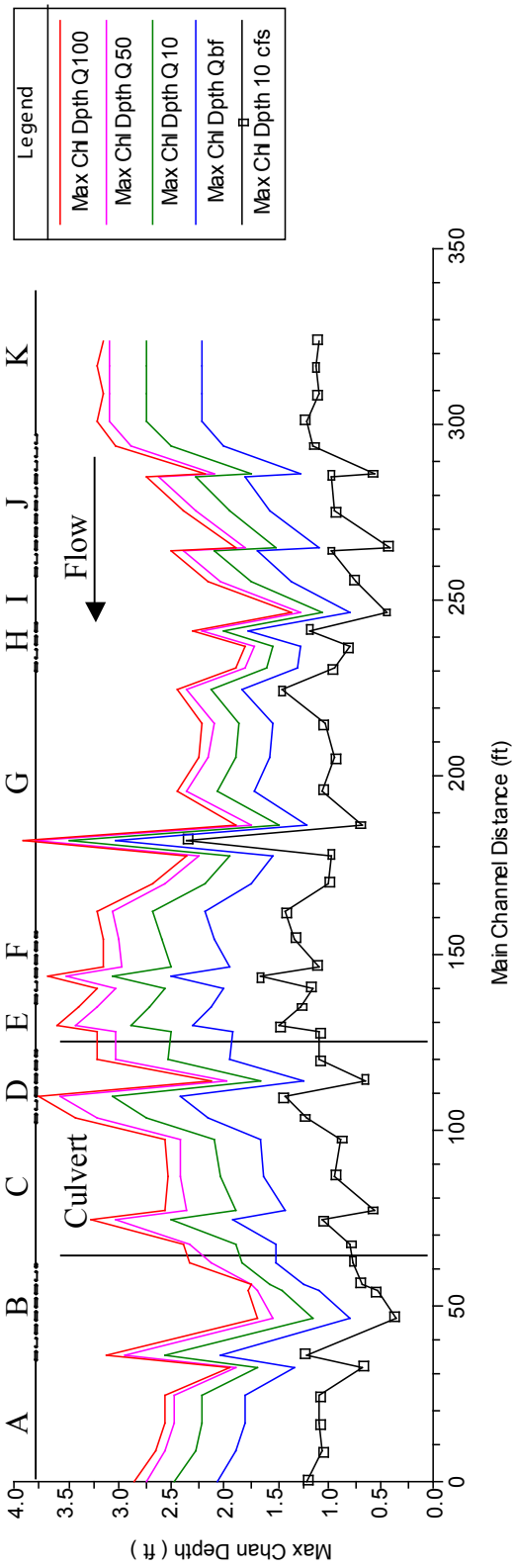

Figure 9—Maximum depth.

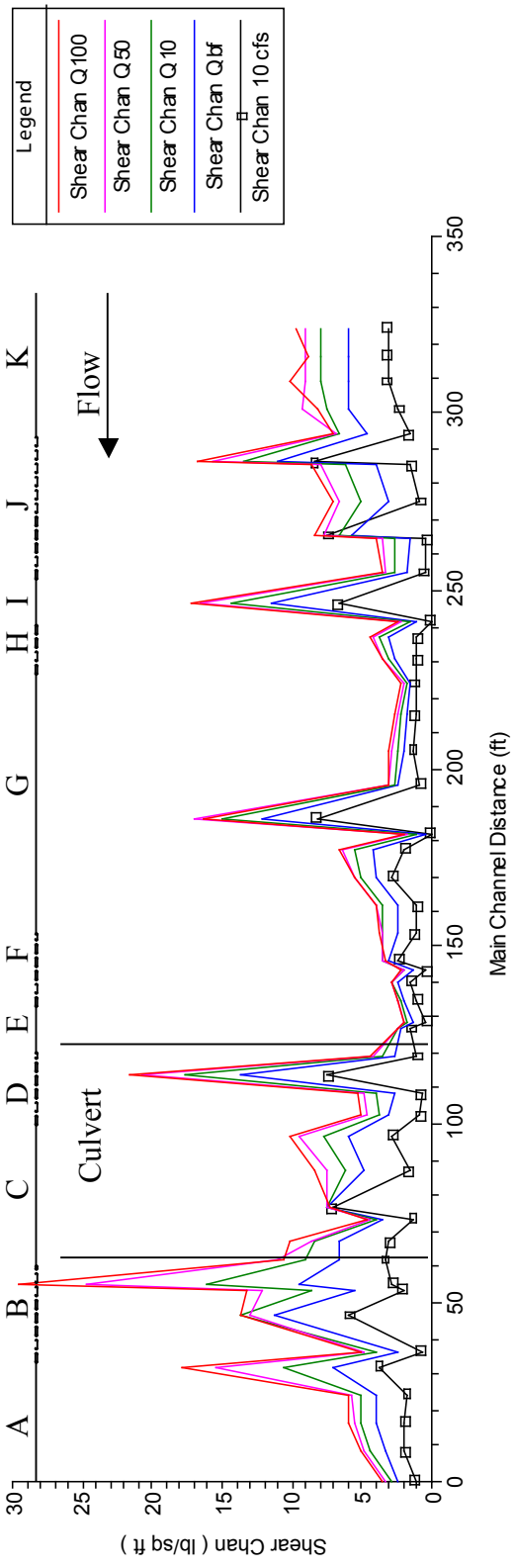

Figure 10—Shear stress (channel) profile.

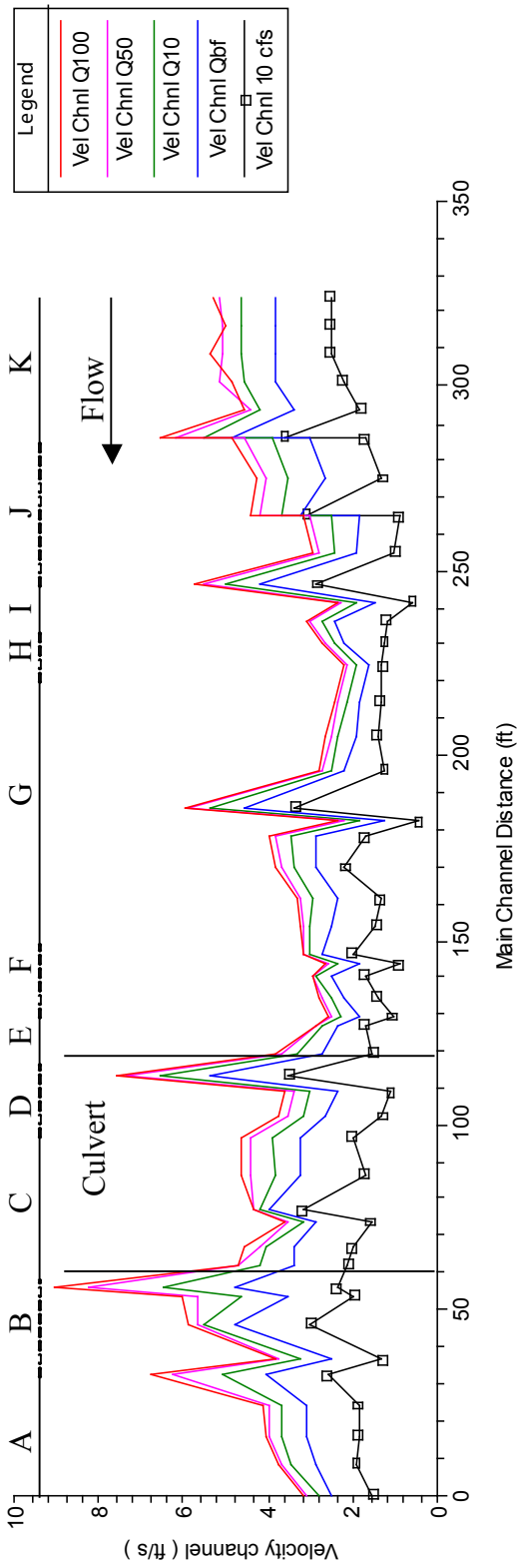

Figure 11—Velocity (channel) profile plot.

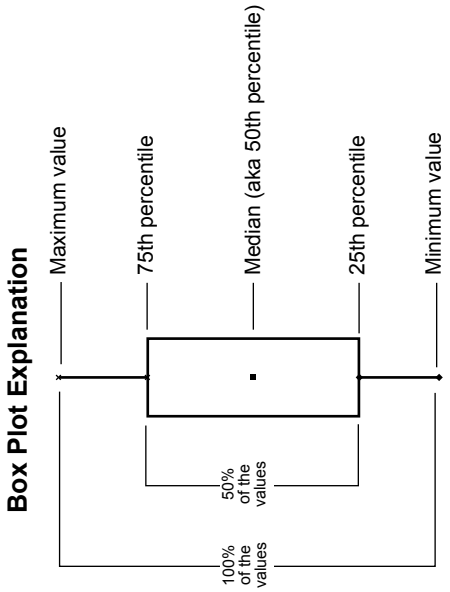

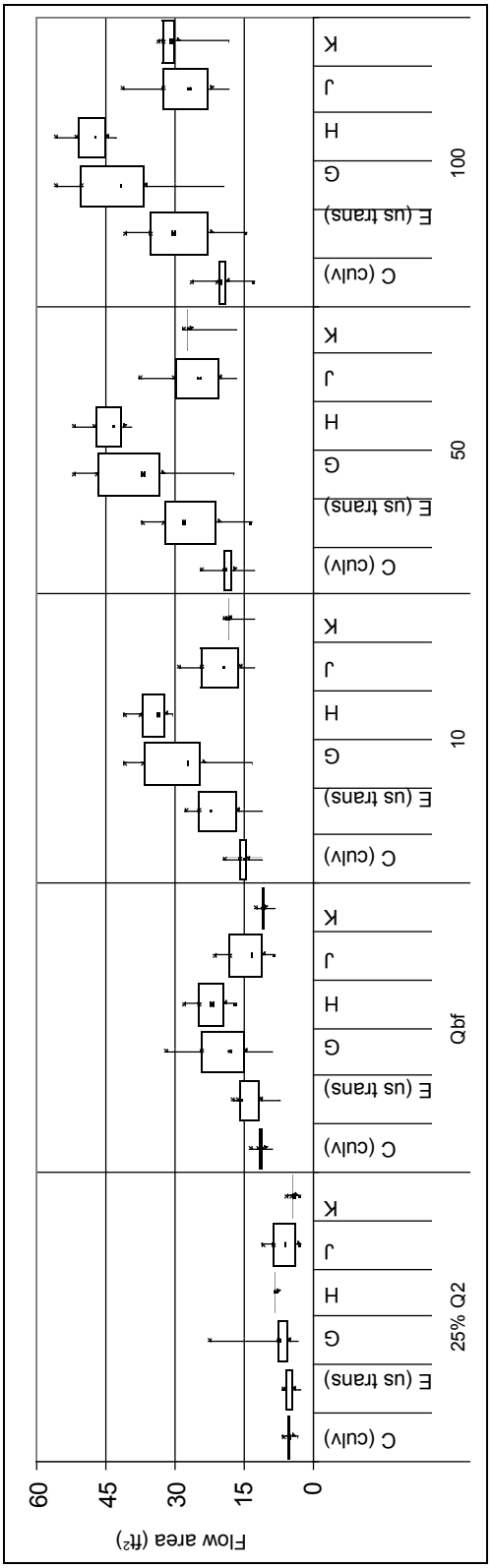

Figure 12—Flow area (total).

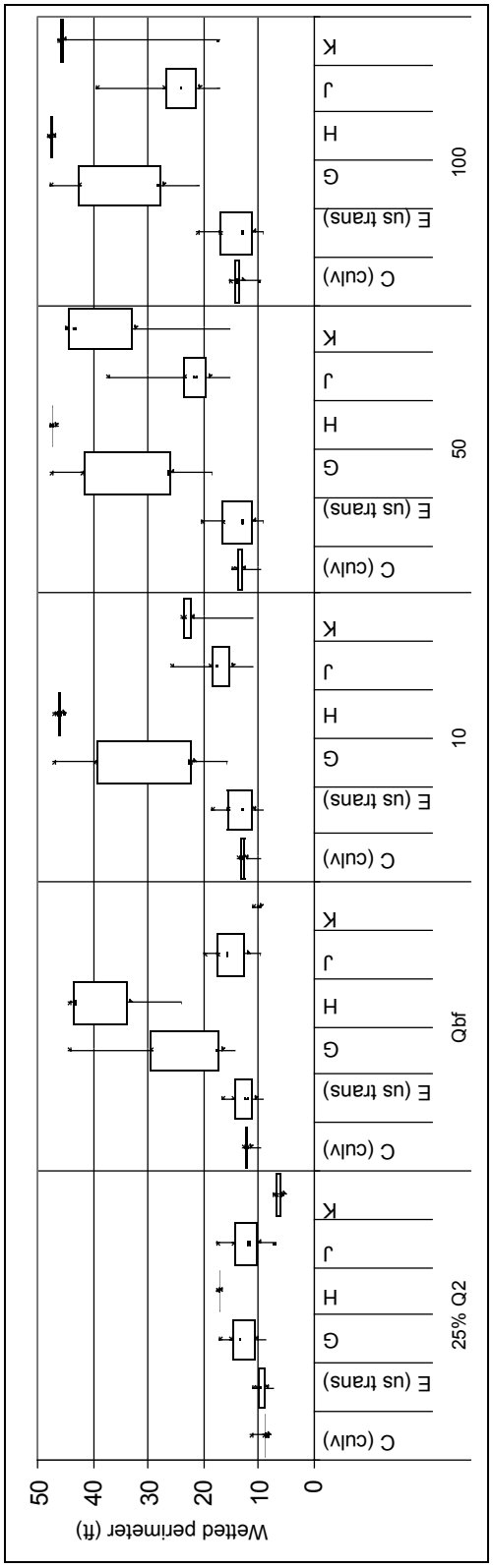

Figure 13—Wetted perimeter.

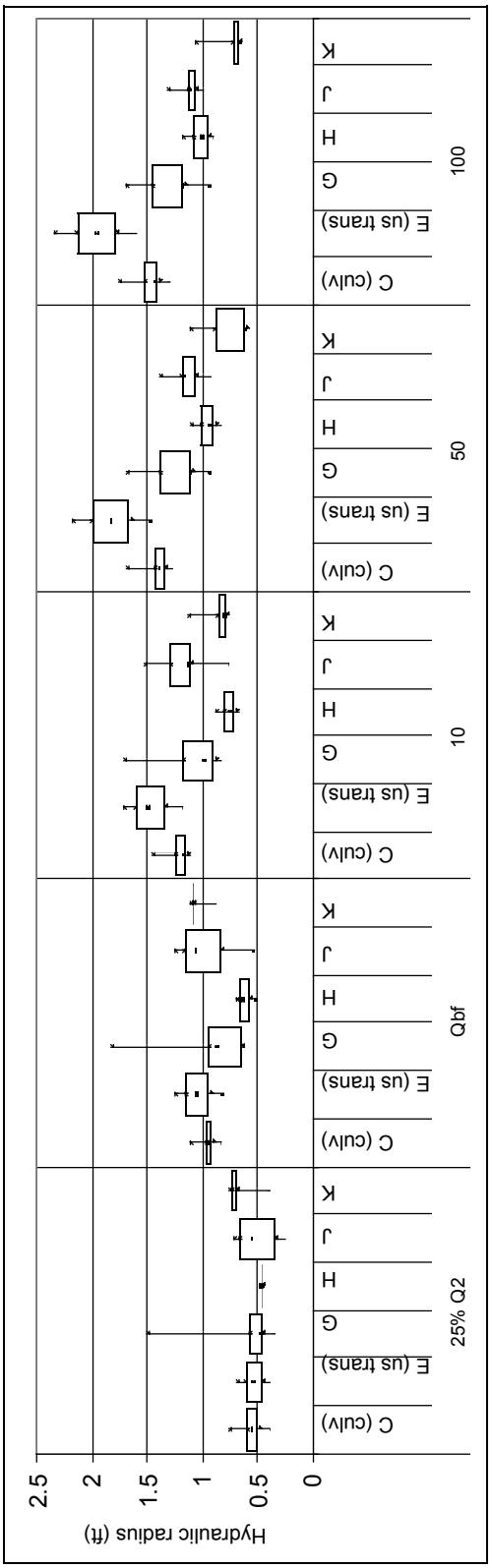

Figure 14—Hydraulic radius.

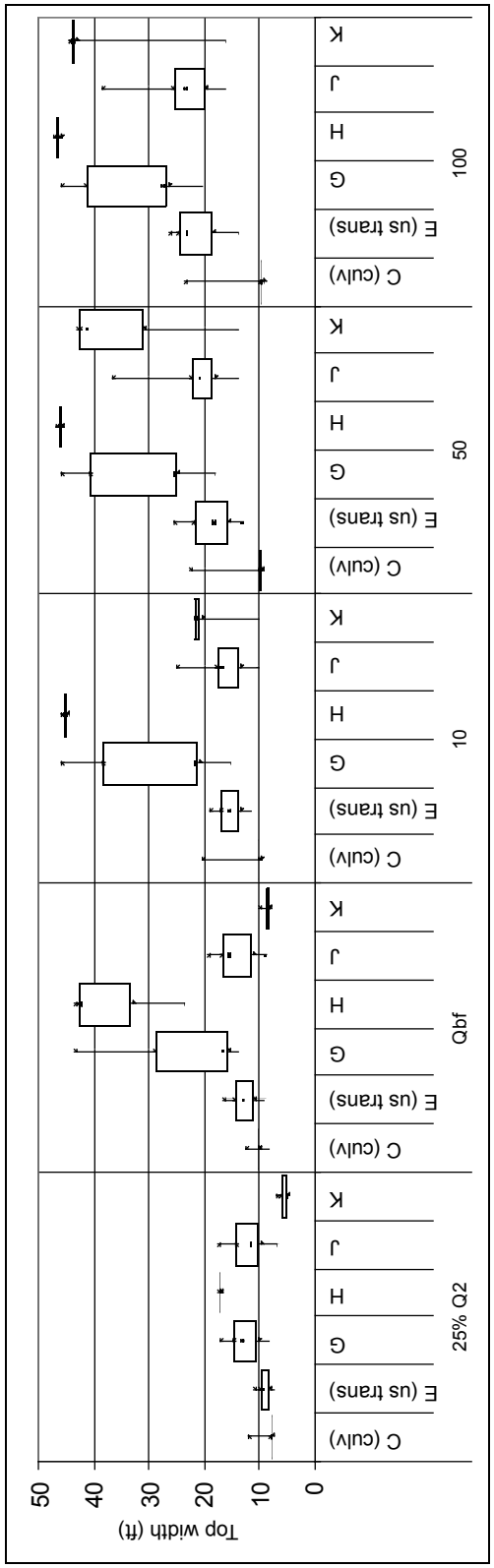

Figure 15—Top width.

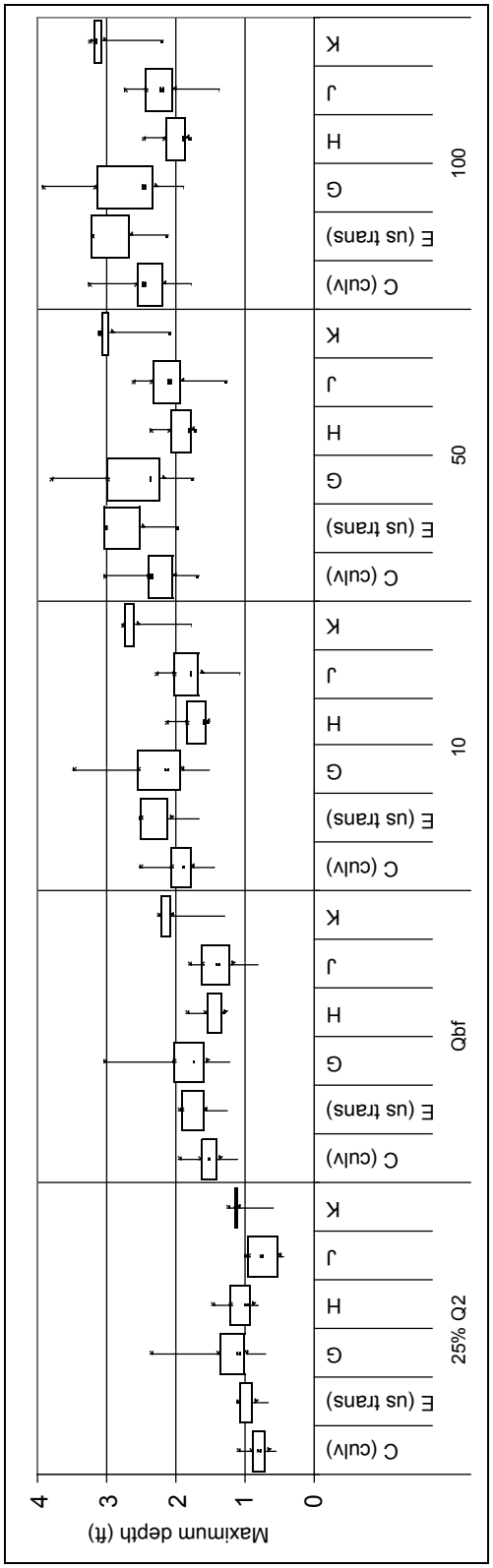

Figure 16—Maximum depth.

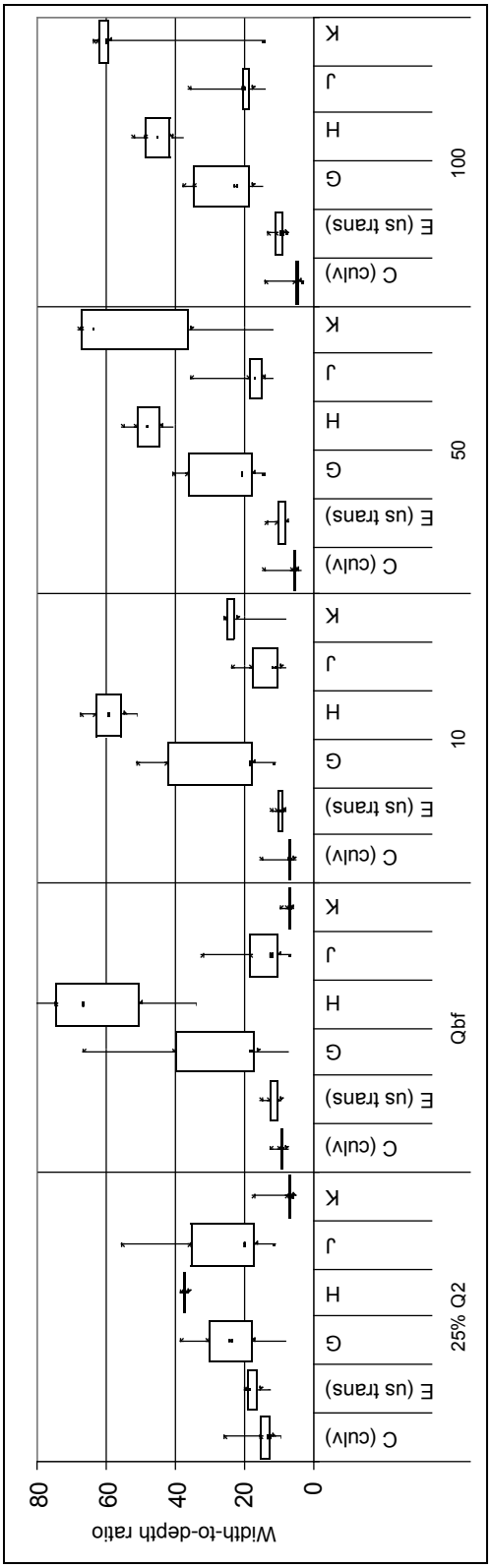

Figure 17—Width-to-depth ratio.

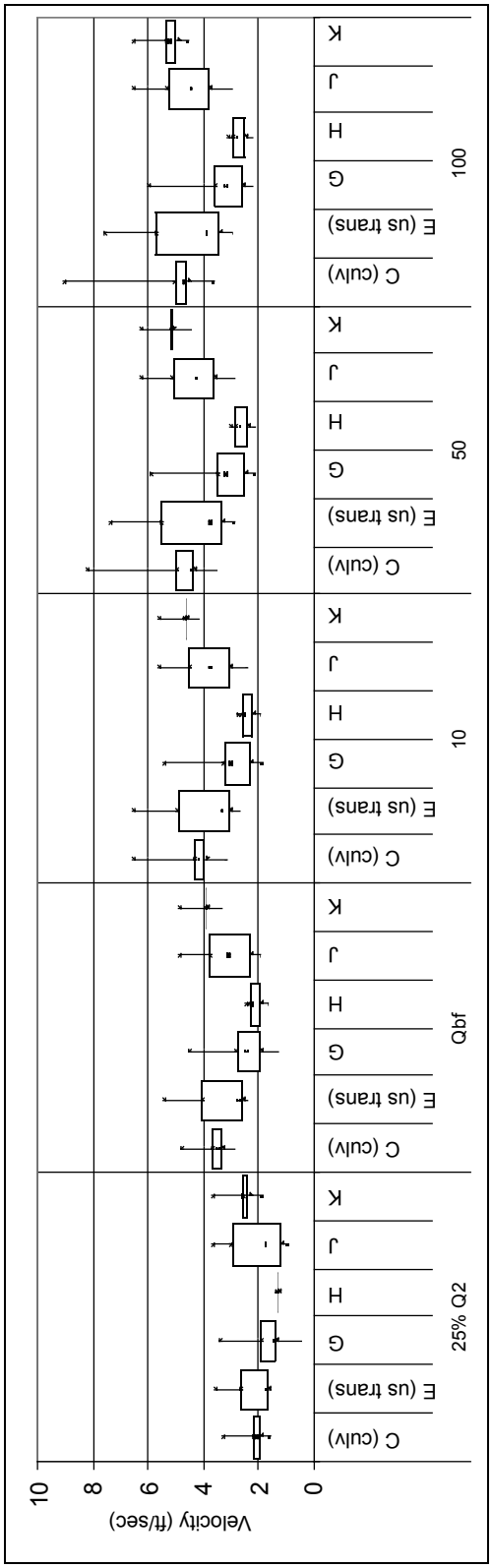

Figure 18—Velocity (channel).

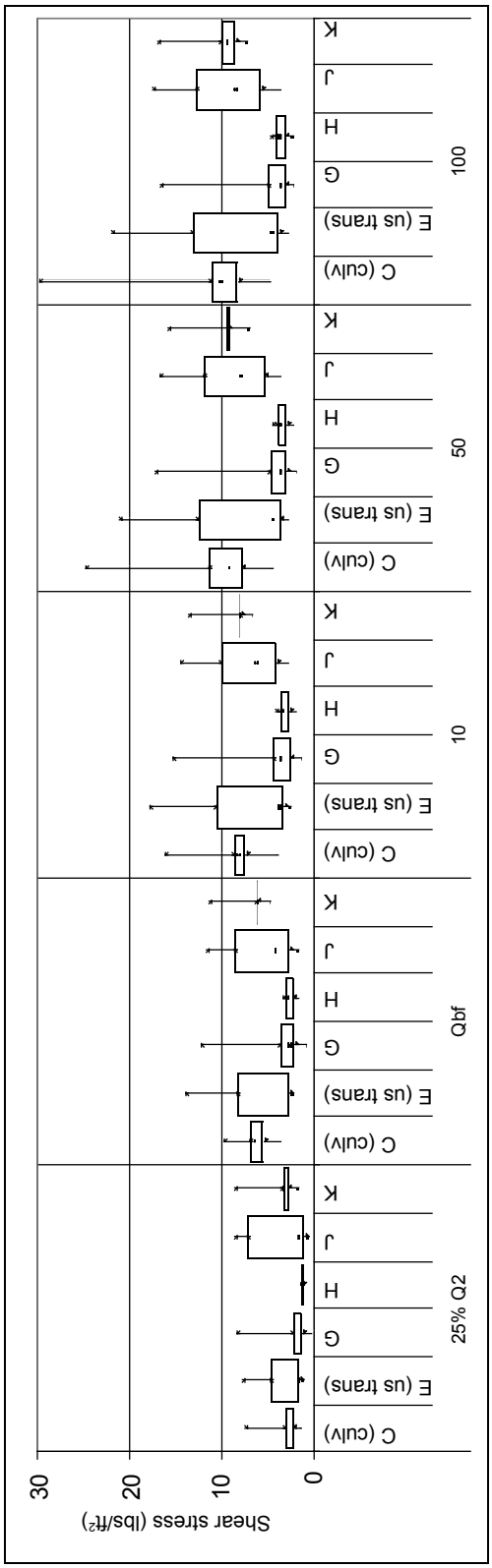

Figure 19—Shear stress (channel).

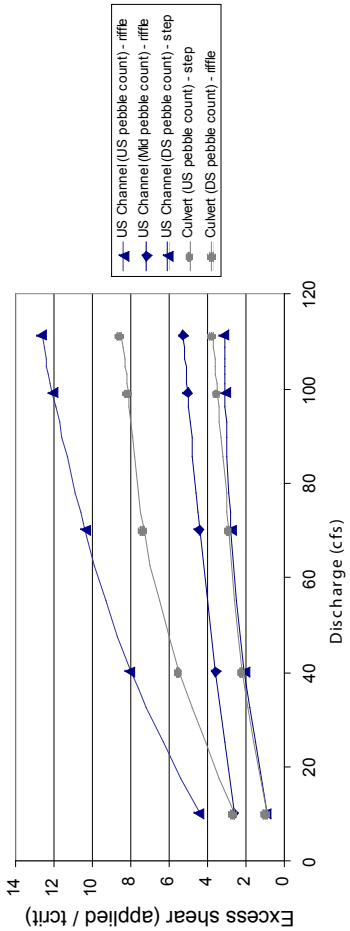

Excess shear stress is the channel shear divided by the critical shear for bed entrainment of the D_{84} particle size. Values of excess shear greater than 1 indicate bed movement for the D_{84} particle size.

Figure 20—Excess shear stress.

Table 3—Sum of squared height difference

Reach	XS Location	Unit type	Sum of squared height difference	Within range of channel conditions?
Culvert	US	Step	0.05	Yes
	DS	Riffle	0.03	Yes
Upstream	US	Riffle	0.02	
	Middle	Riffle	0.03	
	DS	Step	0.20	

Table 4—Vertical sinuosity

Segment	Location	Vertical Sinuosity (ft/ft)
A	DS channel	1.003
B	DS transition	1.010
C	Culvert	1.004
D	Culvert	1.001
E	US transition	1.032
F	US transition	1.003
G	US channel	1.014
H	US channel	1.001
I	US channel	1.015
J	US channel	1.011
K	US channel	1.008

Table 5—Depth distribution

Reach	XS Location	25% Q_2	Within range of channel conditions?
Culvert	US	0	No
	DS	0	No
Upstream	US	4	
	Middle	20	
	DS	6	

Table 6—Habitat unit composition

Reach	Percent of surface area			
	Pool	Glide	Riffle	Step
Culvert	15%	0%	73%	11%
Upstream Channel	22%	0%	73%	5%

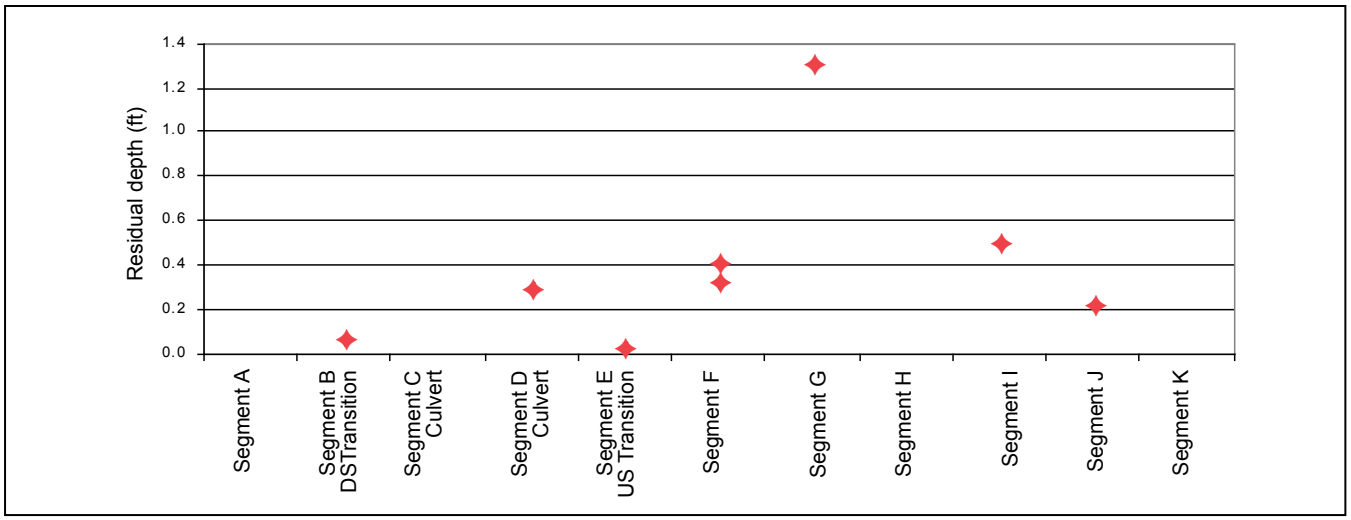

Figure 21—Residual depths.

Table 7—Bed material sorting and skewness

Reach	XS Location	Unit Type	Sorting	Within range of channel conditions?	Skewness	Within range of channel conditions?
Culvert	US	Step	2.15	Yes	0.01	No
	DS	Riffle	1.88	Yes	0.28	Yes
Upstream	US	Riffle	2.26		0.36	
	Middle	Riffle	2.28		0.19	
	DS	Step	1.89		0.45	
Downstream		Riffle	1.91		0.42	

Table 8—Large woody debris

Reach	Pieces/Channel Width
Culvert	0
Upstream	1.7

Terminology:

US = Upstream

DS = Downstream

RR = Reference reach

XS = Cross section

View upstream through culvert.

View downstream towards culvert inlet.

Upstream reference reach—upstream pebble count, riffle.

Upstream reference reach – downstream pebble count, riffle.

View downstream from outlet.

View upstream from confluence with Deadwood Creek.

Cross section: Upstream Reference Reach – Upstream Pebble Count

Material	Size Range (mm)	Count	Item %	Cumulative %
sand	<2	12	12%	12%
very fine gravel	2 - 4	3	3%	15%
fine gravel	4 - 5.7	6	6%	21%
fine gravel	5.7 - 8	7	7%	27%
medium gravel	8 - 11.3	2	2%	29%
medium gravel	11.3 - 16	6	6%	35%
coarse gravel	16 - 22.6	3	3%	38%
coarse gravel	22.6 - 32	8	8%	46%
very coarse gravel	32 - 45	15	15%	61%
very coarse gravel	45 - 64	9	9%	70%
small cobble	64 - 90	10	10%	79%
medium cobble	90 - 128	12	12%	91%
large cobble	128 - 180	6	6%	97%
very large cobble	180 - 256	3	3%	100%
small boulder	256 - 362	0	0%	100%
small boulder	362 - 512	0	0%	100%
medium boulder	512 - 1024	0	0%	100%
large boulder	1024 - 2048	0	0%	100%
very large boulder	2048 - 4096	0	0%	100%
bedrock	> 4096	0	0%	100%

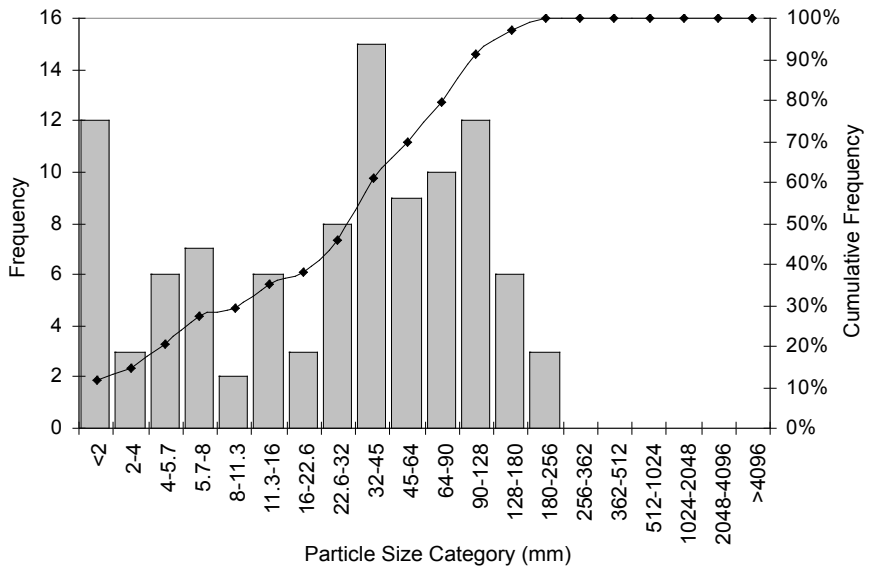

Size Class	Size percent finer than (mm)
D5	1
D16	4
D50	35
D84	105
D95	162
D100	218

Material	Percent Composition
Sand	12%
Gravel	58%
Cobble	30%
Boulder	0%
Bedrock	0%

Sorting Coefficient: 2.26

Skewness Coefficient: 0.36

Cross section: Upstream Reference Reach – Middle Pebble Count

Material	Size Class (mm)	Count	Item %	Cumulative %
sand	<2	13	13%	13%
very fine gravel	2 - 4	7	7%	21%
fine gravel	4 - 5.7	10	10%	31%
fine gravel	5.7 - 8	7	7%	38%
medium gravel	8 - 11.3	6	6%	44%
medium gravel	11.3 - 16	3	3%	47%
coarse gravel	16 - 22.6	5	5%	53%
coarse gravel	22.6 - 32	13	13%	66%
very coarse gravel	32 - 45	5	5%	71%
very coarse gravel	45 - 64	8	8%	79%
small cobble	64 - 90	7	7%	87%
medium cobble	90 - 128	9	9%	96%
large cobble	128 - 180	4	4%	100%
very large cobble	180 - 256	0	0%	100%
small boulder	256 - 362	0	0%	100%
small boulder	362 - 512	0	0%	100%
medium boulder	512 - 1024	0	0%	100%
large boulder	1024 - 2048	0	0%	100%
very large boulder	2048 - 4096	0	0%	100%
bedrock	Bedrock	0	0%	100%

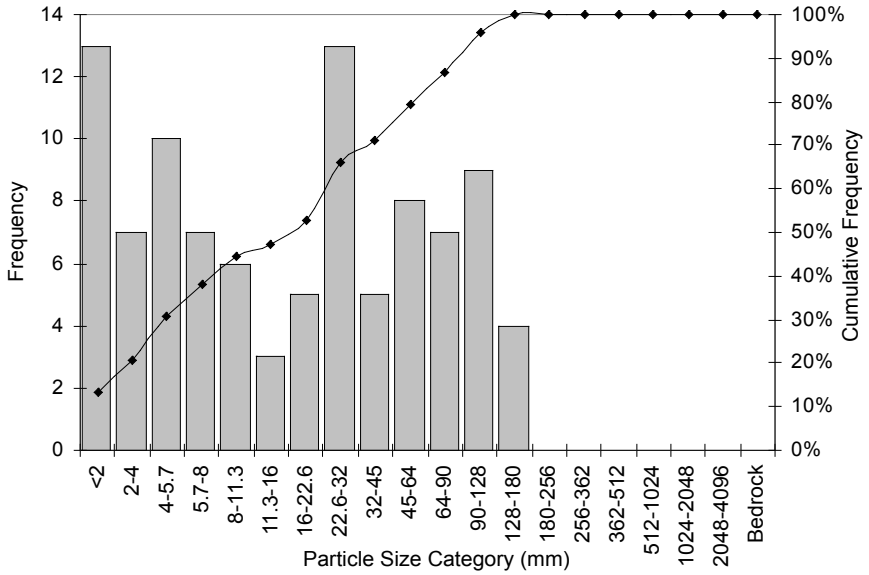

Size Class	Size percent finer than (mm)
D5	1
D16	3
D50	19
D84	81
D95	124
D100	154

Material	Percent Composition
Sand	13%
Gravel	66%
Cobble	21%
Boulder	0%
Bedrock	0%

Sorting Coefficient: 2.28

Skewness Coefficient: 0.19

Cross section: Upstream Reference Reach – Downstream Pebble Count

Material	Size Class (mm)	Count	Item %	Cumulative %
sand	<2	4	4%	4%
very fine gravel	2 - 4	4	4%	8%
fine gravel	4 - 5.7	5	5%	13%
fine gravel	5.7 - 8	2	2%	15%
medium gravel	8 - 11.3	4	4%	19%
medium gravel	11.3 - 16	2	2%	21%
coarse gravel	16 - 22.6	4	4%	25%
coarse gravel	22.6 - 32	12	12%	37%
very coarse gravel	32 - 45	6	6%	43%
very coarse gravel	45 - 64	10	10%	53%
small cobble	64 - 90	11	11%	64%
medium cobble	90 - 128	21	21%	85%
large cobble	128 - 180	10	10%	95%
very large cobble	180 - 256	3	3%	98%
small boulder	256 - 362	1	1%	99%
small boulder	362 - 512	1	1%	100%
medium boulder	512 - 1024	0	0%	100%
large boulder	1024 - 2048	0	0%	100%
very large boulder	2048 - 4096	0	0%	100%
bedrock	Bedrock	0	0%	100%

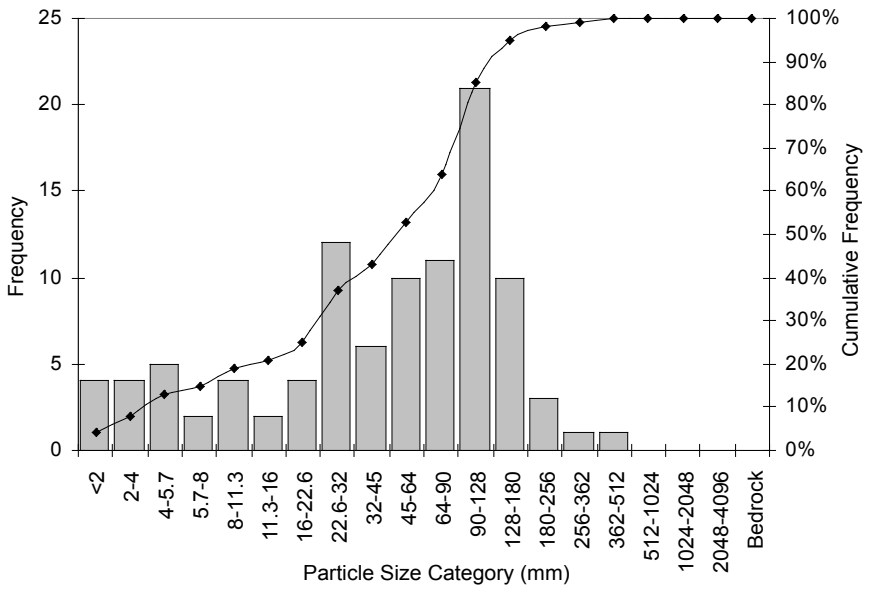

Size Class	Size percent finer than (mm)
D5	2.5
D16	9
D50	58
D84	126
D95	180
D100	437

Material	Percent Composition
Sand	4%
Gravel	49%
Cobble	45%
Boulder	2%
Bedrock	0%

Sorting Coefficient: 1.89

Skewness Coefficient: 0.45

Cross section: Culvert – Upstream Pebble Count

Material	Size Class (mm)	Count	Item %	Cumulative %
sand	<2	1	1%	1%
very fine gravel	2 - 4	0	0%	1%
fine gravel	4 - 5.7	2	2%	3%
fine gravel	5.7 - 8	3	3%	6%
medium gravel	8 - 11.3	2	2%	8%
medium gravel	11.3 - 16	1	1%	9%
coarse gravel	16 - 22.6	12	13%	22%
coarse gravel	22.6 - 32	6	6%	28%
very coarse gravel	32 - 45	8	8%	36%
very coarse gravel	45 - 64	3	3%	40%
small cobble	64 - 90	12	13%	52%
medium cobble	90 - 128	7	7%	59%
large cobble	128 - 180	12	13%	72%
very large cobble	180 - 256	4	4%	76%
small boulder	256 - 362	6	6%	82%
small boulder	362 - 512	3	3%	85%
medium boulder	512 - 1024	14	15%	100%
large boulder	1024 - 2048	0	0%	100%
very large boulder	2048 - 4096	0	0%	100%
bedrock	Bedrock	0	0%	100%

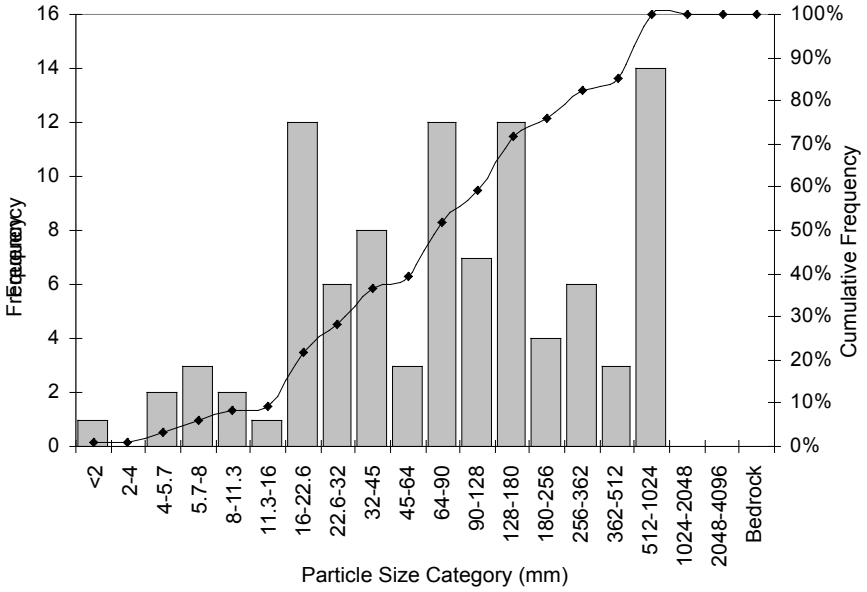

Size Class	Size percent finer than (mm)
D5	7
D16	19
D50	86
D84	444
D95	768
D100	768

Material	Percent Composition
Sand	1%
Gravel	39%
Cobble	36%
Boulder	24%
Bedrock	0%

Sorting Coefficient: 2.15

Skewness Coefficient: 0.01

Cross section: Culvert – Downstream Pebble Count

Material	Size Class (mm)	Count	Item %	Cumulative %
sand	<2	2	2%	2%
very fine gravel	2 - 4	4	4%	6%
fine gravel	4 - 5.7	2	2%	8%
fine gravel	5.7 - 8	6	6%	14%
medium gravel	8 - 11.3	4	4%	18%
medium gravel	11.3 - 16	8	8%	26%
coarse gravel	16 - 22.6	5	5%	31%
coarse gravel	22.6 - 32	9	9%	40%
very coarse gravel	32 - 45	5	5%	45%
very coarse gravel	45 - 64	13	13%	58%
small cobble	64 - 90	10	10%	68%
medium cobble	90 - 128	12	12%	80%
large cobble	128 - 180	11	11%	91%
very large cobble	180 - 256	9	9%	100%
small boulder	256 - 362	0	0%	100%
small boulder	362 - 512	0	0%	100%
medium boulder	512 - 1024	0	0%	100%
large boulder	1024 - 2048	0	0%	100%
very large boulder	2048 - 4096	0	0%	100%
bedrock	Bedrock	0	0%	100%

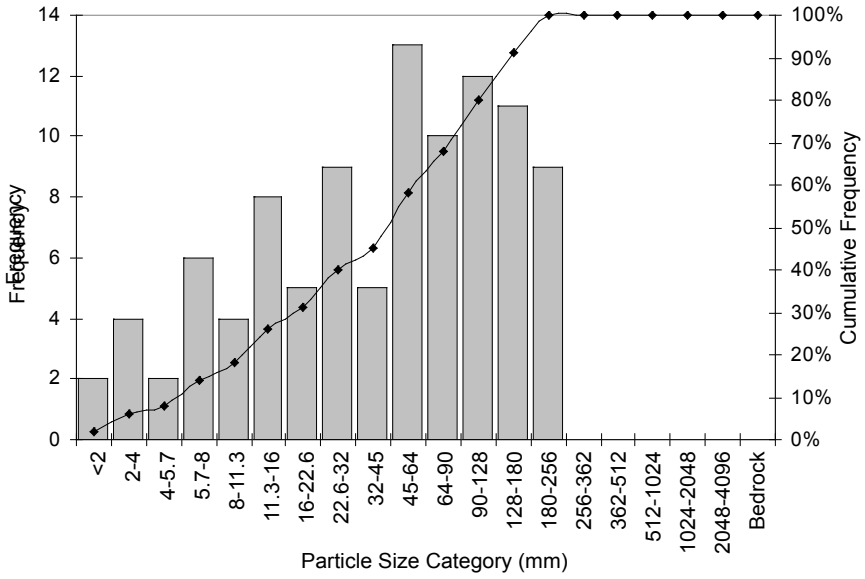

Size Class	Size percent finer than (mm)
D5	4
D16	10
D50	52
D84	147
D95	214
D100	218

Material	Percent Composition
Sand	2%
Gravel	56%
Cobble	42%
Boulder	0%
Bedrock	0%

Sorting Coefficient: 1.88

Skewness Coefficient: 0.28

Cross section: Downstream of culvert – Only Pebble Count

Material	Size Class (mm)	Count	Item %	Cumulative %
sand	<2	5	5%	5%
very fine gravel	2 - 4	7	7%	12%
fine gravel	4 - 5.7	2	2%	14%
fine gravel	5.7 - 8	1	1%	15%
medium gravel	8 - 11.3	2	2%	17%
medium gravel	11.3 - 16	4	4%	21%
coarse gravel	16 - 22.6	8	8%	29%
coarse gravel	22.6 - 32	7	7%	36%
very coarse gravel	32 - 45	7	7%	43%
very coarse gravel	45 - 64	13	13%	57%
small cobble	64 - 90	13	13%	70%
medium cobble	90 - 128	17	17%	87%
large cobble	128 - 180	8	8%	95%
very large cobble	180 - 256	4	4%	99%
small boulder	256 - 362	1	1%	100%
small boulder	362 - 512	0	0%	100%
medium boulder	512 - 1024	0	0%	100%
large boulder	1024 - 2048	0	0%	100%
very large boulder	2048 - 4096	0	0%	100%
bedrock	Bedrock	0	0%	100%

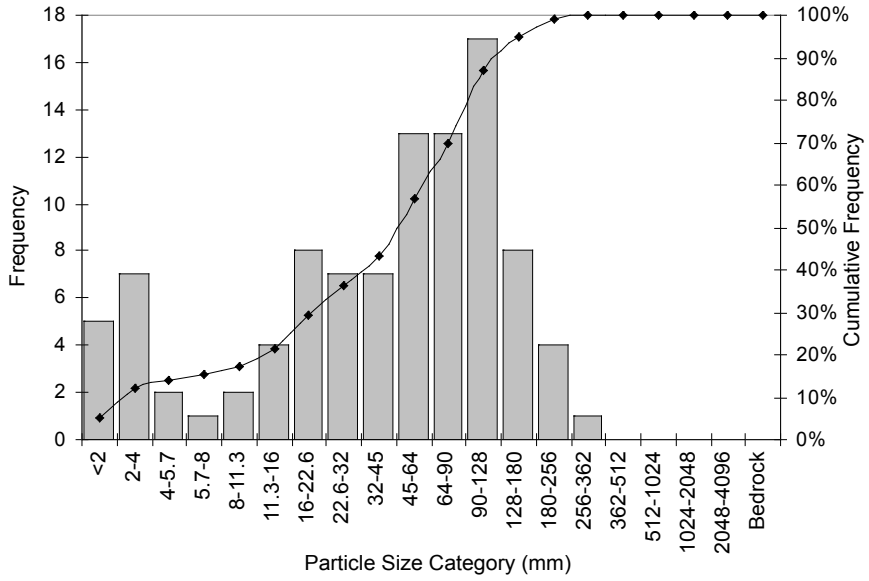

Size Class	Size percent finer than (mm)
D5	2
D16	9
D50	55
D84	122
D95	181
D100	309

Material	Percent Composition
Sand	5%
Gravel	52%
Cobble	42%
Boulder	1%
Bedrock	0%

Sorting Coefficient: 1.91

Skewness Coefficient: 0.42

**This pebble count was not used in the analysis because the downstream reach was not used as a reference reach*