BUCK CREEK

Site Information

Site Location:	Coast Range, Southern Willamette Valley (Deadwood Road)		
Year Installed:	2003		
Lat/Long:	123°42'11.73"W 44°11'23.80"N	**Watershed Area (mi²)**:	1.54
Stream Slope (ft/ft)[1]:	0.014	**Channel Type:**	Pool/Riffle
Bankfull Width (ft):	20 ft	**Survey Date:**	March 7, 2007

[1]Water surface slope extending up to 20 channel widths up and downstream of crossing.

Culvert Information

Culvert Type:	Bottomless arch	**Culvert Material:**	Annular CMP
Culvert Width:	17 ft	**Outlet Type:**	Projecting
Culvert Length:	60 ft	**Inlet Type:**	Projecting

Pipe Slope (structure slope): 0.0008

Culvert Bed Slope: 0.015

(First hydraulic control upstream of inlet to first hydraulic control downstream of outlet.)

Culvert width as a percentage of bankfull width: 0.85

Alignment Conditions: Culvert angled towards high bank at downstream end, likely exacerbating erosion conditions on bank. Possible that meanders were cut off as part of original culvert installation (older culvert).

Bed Conditions: Angular material in culvert bed; possibly from riprap from inlet that has been incorporated into culvert bed, or from constructed riprap banks within culvert.

Pipe Condition: Good condition.

Hydrology

Discharge (cfs) for indicated recurrence interval

25% 2-yr	Q_{bf}[2]	2-year	5-year	10-year	50-year	100-year
30	100	119	171	208	290	326

[2]Bankfull flow estimated by matching modeled water surface elevations to field-identified bankfull elevations.

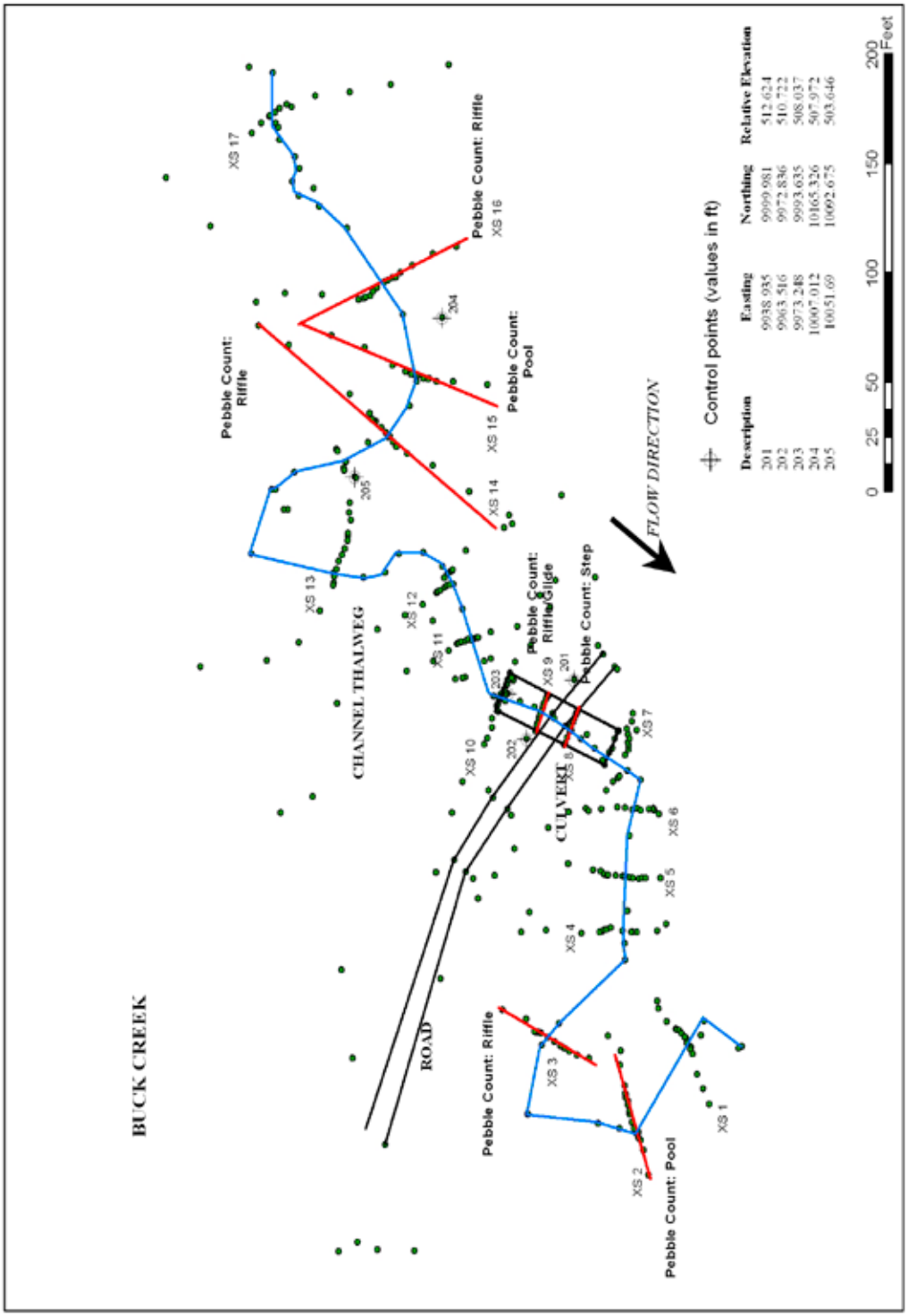

Points represent survey points

Figure 1—Plan view map.

HISTORY

The Buck Creek culvert was installed in 2003. During construction, native material from beneath the culvert was conserved and placed back between the footings. The assumed gradation was the same as the upstream reach. Additional crushed rock was placed along footings to prevent scour. There was no sorting or grading of material during placement, but a shallow thalweg was formed in the middle third of the bed. Channel banks were constructed within the pipe and were composed of sloped crushed rock riprap (see photo).

For horizontal alignment, lines were drawn on the site plan, connecting upstream and downstream banks and mimicking natural meander. The downstream meander is sharp and no significant relocation of the channel alignment was previously done. No structure existed at the site since it was washed out about 3 years previously. The new structure was centered in the existing channel.

With respect to vertical alignment, the upstream channel was aggraded about 12 inches or less. Downstream was a scour pool with a maximum depth of 18 inches. Downstream of the sharp meander the channel steepened slightly. The structure was designed to be embedded 1.2 meters below the existing channel and aligned with the upstream to tailout gradient; however, the contractor erred and the footings ended up being placed 2 feet higher than designed. This left an embedment depth of 24 inches. The footing is 3.5-feet wide, 1-foot thick. The footing stemwall is 4-feet high by 1-foot thick.

There has been no significant maintenance or management of conditions at the site.

The above information furnished by Kim Johansen, USFS.

The flood history at a nearby gauge with a drainage area of 5.7 square miles (USGS #14306340) indicates that the largest event since construction was an approximately 2-year recurrence interval event in 2006.

SITE DESCRIPTION

The Buck Creek culvert is a tall bottomless arch that projects from the roadfill. It has prominent concrete footings exposed along its entire length. The culvert is made up of a glide in the upstream portion of the culvert and a steep riffle in the downstream portion. Coarse angular material up to large-cobble/small-boulder size is present in the culvert bed. Two large rootwads, one just downstream of the inlet and the other at the top of the steep riffle, have been deposited in the culvert.

From site observations, it appears that coarse angular material was placed on the banks at the inlet and outlet. Sloped crushed-rock riprap was also placed along the culvert sides within the culvert (Kim Johansen, USFS, personal communication). It is likely that the angular material now making up much of the culvert bed was recruited from this placed material. There is now a well-armored steep riffle that makes up the downstream half of the culvert. This riffle is steeper and coarser than any riffles observed in the representative channel segments.

Upstream of the culvert, extending approximately 250 feet, there is evidence of channel bed incision characterized by steep, actively eroding vertical banks. The incision is on the order of 3 feet at the downstream end near the inlet and tapers off upstream over approximately 250 feet. The upstream representative reach is located upstream of this incised area. The reach has well-defined riffles separated by moderately deep pools. Sandstone bedrock was present along upstream portions of the channel bed in the reach. There is a broad flood-plain terrace (especially on the right side) that appears to be active at frequent flood events.

The downstream representative reach is located around the bend from the scoured left bank where it abuts the high terrace. The reach is very sinuous and consists of a series of deep pools separated by short pool crests/riffles. A low flood-plain surface along with high sinuosity indicates that this reach backwaters during moderately high flows.

SURVEY SUMMARY

Eighteen cross sections and a longitudinal profile were surveyed along Buck Creek in March 2007 to characterize the culvert, an upstream representative reach, and a downstream representative reach. Lacking any well-formed pools through the culvert, the reference cross sections in the culvert were located on a glide/riffle and at the top of a steep riffle composed of coarse angular material. Two additional cross sections were taken to characterize the inlet and outlet of the culvert.

Five cross sections were surveyed to characterize the upstream representative reach; one at the upstream and downstream ends, two through riffle channel units and one through a pool. Four cross sections were surveyed to characterize the downstream representative reach; one at the upstream and downstream ends, one through a pool, and one at the crest of a pool.

PROFILE ANALYSIS SEGMENT SUMMARY

The profile analysis resulted in eight profile segments. The culvert consisted of two profile segments, each of which extended into culvert outlet or inlet transition areas. The upstream culvert segment was compared to two segments in the upstream channel and one segment in the downstream channel. The downstream culvert segment was compared to two segments in the upstream channel. One segment (E) upstream of the culvert, where culvert-related channel incision was observed, was compared to an upstream reference segment to evaluate the effect of the culvert on the upstream transition area. See figure 2, table 1, and table 2.

Observed conditions

Footing scour—There was no observed scour undermining footings or threatening structure integrity.

Culvert-bed adjustment—The channel bed shows flattening through the upstream portion of the culvert. A third of the way through the culvert the bed has steepened considerably, resulting in a channel-bed slope much greater than any found through the reference channel.

Profile characteristics—The most characteristic feature of the profile is a steep segment in the downstream portion of the culvert (figure 2). There is also an overall segment of steeper gradient extending from the first hydraulic control downstream of the outlet to the second hydraulic control upstream of the inlet. There was also channel incision noted both upstream of the inlet (extending 250 feet) and downstream of the outlet (extending approximately 80 feet). It is unknown whether this incision is related to this culvert or a previous installation. Downstream of the outlet, the channel abuts a high terrace along the left bank where it causes erosion of

the steep bank during high flows. Erosion of the terrace has added many large logs to the channel immediately downstream of the culvert. A scour pool has formed along the outer left eroding bank.

Based on observations of meander pattern and valley slope at this site, it is likely that the channel-migration zone has been truncated by the culvert and associated roadfill. Straightening of meanders, which possibly occurred during the original road construction and culvert installation, may be contributing to the greater slope through the crossing. This slope increase may have contributed to the incision that can be seen in the channel upstream and downstream of the culvert.

Residual depths—Culvert residual depths ranged from 0.77 to 1.17 feet and were within the range of channel conditions (figure 21). This suggests no significant scour beyond what is found in the channel outside of the crossing.

Substrate—Culvert bed-material distributions are generally similar to representative segments. Culvert substrate is slightly coarser than channel pebble counts due both to the presence of larger rocks/boulders within the culvert that are not present in the channel as well as the smaller number of finer size classes documented within the culvert than was documented in the representative channel pebble counts. The coarse material in the culvert was placed there during construction and is evident in the double-peaked distributions of the culvert pebble counts, representing native material, which most likely was transported in and the coarser peak of placed material. This difference is also evident in the slightly lower (although still within the range of the representative channel conditions) sorting coefficients and the lower skewness values (table 7). Pebble counts are provided at the end of this summary.

Predicted conditions

Cross-section characteristics—In general, the culvert has an impact on the cross-section characteristics with respect to the upstream and downstream channel, most notably for the higher flows. Flow area in the downstream segment of the culvert (C) is similar to the upstream channel segment (G) up until the Q_{bf} when the flow area in the upstream channel becomes slightly greater (figure 5, figure 12). The upstream segment of the culvert (D) is similar to the upstream channel segment (F) for all flows and becomes less than the downstream channel segment (A) above the Q_{bf}. Flow area in the upstream transition segment (E) is similar to the upstream channel segment (G) up to the Q_{100} where it is slightly greater. Wetted perimeter in the downstream segment of the culvert begins to diverge from, and becomes less than, the upstream channel segment (G) by the Q_{bf} (figure 6, figure 13). The upstream culvert segment (D) is similar to the upstream channel segment (G) but less than the downstream channel segment A by the Q_{bf}. The upstream transition segment (E) has a slightly higher wetted perimeter below the Q_{10} and then becomes similar as the range of values within the transition segment increases. Hydraulic radius in the culvert and the upstream transition segment is similar to that in both the upstream and downstream channel for most flows (figure 7, figure 14). One exception is the downstream segment of the culvert (C), which is greater than the upstream channel segment (G) above the Q_{10}. Top width within the downstream segment of the culvert (C) is slightly less than the upstream channel segment (G) for all flows (figure 8, figure 15). Top width in the upstream segment of the culvert (D) is similar to the upstream channel segment (F). Above the Q_{10}, both segments (D) and (F) have a wide range of values indicating high variability through these reaches. However, the median values are relatively close. The upstream segment of the culvert (D) and the downstream channel segment (A), however, do not have similar top widths for lower flows but

become similar above the Q_{10} due to the increase in the range of values in segment D. The top width of the upstream transition segment (E) is greater than the upstream channel segment (G) for the 25 percent Q_2 and the Q_{bf}, similar for the Q_{10} and similar for the Q_{50} and Q_{100}. This variability can also be attributed to the wide range of values of top width found in segment E. Maximum depth in the culvert and the upstream transition segment is similar to that in both the upstream and downstream channel for most flows with the exception that culvert segment (D) has a greater maximum depth than downstream channel segment (A) for flows above the Q_{10} (figure 9, figure 16). Width- to-depth ratio in the culvert is similar to the upstream channel with the exception of the downstream segment of the culvert which remains the same above the Q_{bf}, while upstream channel segment (G) increases (figure 17). However, the width-to-depth ratio in the culvert compared to the downstream channel segment (A) is less, with the exception of segment D which becomes similar to segment A as the range of values becomes large above the Q_{10}.

Shear stress—Shear stress in the culvert is similar to the upstream and downstream channel for the range of flows (figure 19). However, the downstream segment of the culvert has higher median values than the upstream channel segment (G). The difference between the two culvert segments can be attributed to the change in slope. This transition between segments C and D experiences the highest shear stress values in the entire reach (figure 10). The upstream transition segment E's shear stress is similar to, if not slightly less than, the upstream channel segment G for all flows, a phenomenon related to backwater effects of the culvert.

Excess shear—The excess shear analysis shows that the culvert has greater potential for bed mobilization than the upstream channel at all flows and similar potential to the downstream channel for flows above the Q_{bf} (figure 20). The excess shear analysis shows that the DS channel has a greater potential for bed mobilization at the 25 percent Q_2 than does the culvert having a value above the threshold value of "1," dropping back to similar values as found in the culvert. While this phenomenon may be real, it may most likely be attributed to model instability.

Velocity –Velocity in the upstream culvert segment (D) is similar to the upstream representative channel segment (F) but higher than the downstream representative segment (A) at the Q_{10} and above (figure 11, figure 18). Velocity in the downstream culvert segment (C) is higher than the upstream representative segment (G) at the Q_2 and above. These higher culvert velocities correspond to the flow contraction (reduction in flow area) caused by the culvert. The upstream transition segment (E) is similar, if not slightly less than, the upstream representative channel segment (G).

Scour summary

While the culvert shows no significant bed scour, evidence of bed adjustment exist. The convex channel profile through the crossing indicates heavy incision through the downstream portion of the culvert and the downstream channel with minor aggradation through the upstream portion. Based on observations of meander pattern and valley slope at this site, it is likely that the channel migration zone has been truncated by the culvert and associated roadfill. Such a change in channel planform, i.e., a shorter channel length, would likely result in a greater bed slope. As the channel has eroded away into the high terrace forming a deep scour pool, the downstream segment of the culvert has steepened into a high-gradient riffle as the larger placed rock serves to control grade. The drop in grade creates a backwater condition through the upstream culvert during high flows resulting in minor aggradation. Additionally, 250 feet of channel upstream of the crossing shows evidence of incision.

Conditions indicate a low risk for future scour in the culvert. Further erosion of the channel bed through the culvert is possible according to the excess shear analysis as the bed continues to adjust to the altered channel planform. In the future the upstream channel may show significant channel changes as it adjusts to the incision.

AOP CONDITIONS

Cross-section complexity—The sum of squared height differences in the culvert cross sections are both within the range of those in the channel cross sections (table 3).

Profile complexity—Vertical sinuosity in the culvert segments are both within the range of those in the channel cross sections (table 4).

Depth distribution—There is less channel margin habitat in the upstream culvert compared to the channel at the 25 percent Q_2 but similar channel margin habitat in the downstream culvert compared to the channel (table 5).

Habitat units—The habitat-unit composition shows great variation between the culvert and the upstream and downstream representative channels (table 6). Both the culvert and upstream channel have similar percentages of riffle; however the remainder of the units in the upstream channel is pool while the remainder of the channel within the culvert is composed of glide. The downstream channel consists of mostly of pool habitat (82 percent) with only short riffles/pool crests separating each pool.

Residual depths—Culvert residual depths are within the range of channel conditions (figure 21).

Bed material—Bed-material distributions are similar in the culvert compared to the channel (see pebble-count data provided at end of this site summary). The culvert has a similar percentage of gravels as the upstream channel but less than the downstream channel. The size and frequency of the large particles in the culvert are greater than both the upstream and the downstream channel. This partly reflects the gradient transition through the crossing but also reflects the large rocks that were placed during construction. Culvert bed material sorting values are relatively low indicating a narrower range of particle sizes than the channel, yet are all within the range found in the stream channel (table 7). The bed material skewness value in the upstream XS in the culvert is less than any skewness values in the channel. The low value indicates a nearly normal (symmetrical) distribution, which is due to a similar number of large particles (greater than 256) and small particles (less than 22.6).

Large woody debris—There was one large log present in the upstream portion of the culvert (table 8). The downstream channel had high LWD abundance, primarily as a result of a LWD jam just downstream of the culvert outlet. LWD created habitat complexity but was not a primary pool-forming feature in the natural channel.

AOP summary

Measurements and observations suggest that the Buck Creek culvert has similar conditions to the natural channel with respect to aquatic organism passage (AOP). Cross-section complexity in the culvert is within the range of that found in the channel. Culvert residual depths and vertical sinuosity are also similar to the channel. Potential passage issues may result from a lack of pool habitat available through the crossing and a deficit of channel margin habitat especially in the upstream portion of the culvert. The steep riffle in the downstream portion of the culvert is steeper and coarser than any riffles observed in the reference segments; however, fish passage appears to be suitable at the flow level observed during the survey.

Bed material composition is similar between the culvert and the channel segments, with only slight differences that can be explained by the gradient transition through the downstream segment and the placement of rock during construction. These similar bed compositions suggest that AOP is not impaired by the characteristics of the culvert bed material.

DESIGN CONSIDERATIONS

Despite moderate bed adjustments, this design has functioned relatively well. The likely adjustment to the creek's channel planform has resulted in bed adjustments through the crossing and in the downstream channel. Placed material serves as grade control, essentially preventing a headcut and further incision from occurring. Additional erosion of the high terrace on the left bank immediately downstream of the culvert will continue to deliver wood and sediment to the channel. Exposed footings do not appear to be threatened by these adjustments. Two logs documented within the crossing at the time of the survey indicate the potential for passage of wood through the crossing at high flows which could cause structural problems in the future.

Hydraulic modeling indicates that flows up to the Q_{100} are able to pass through the culvert with almost 7 feet of clearance at the inlet between the modeled water surface and the crown indicating that the pipe is more than large enough to pass flows.

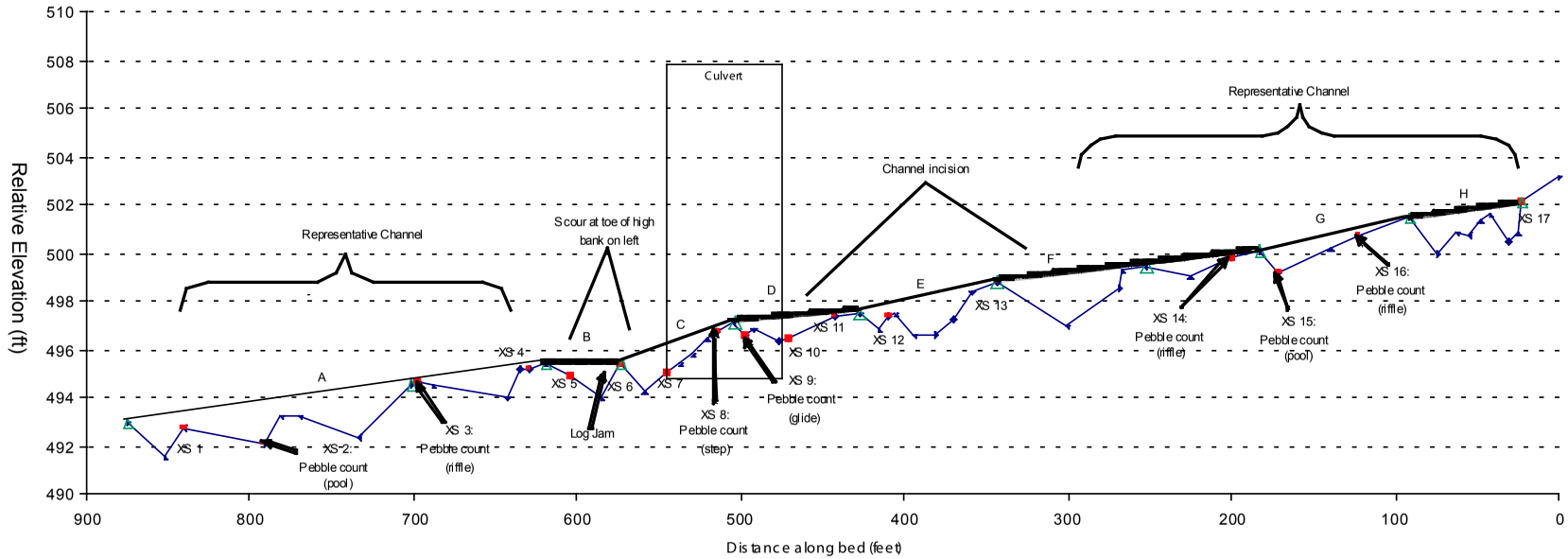

Figure 2—Buck Creek longitudinal profile.

Table 1—Segment comparisons

Culvert Segment	Representative Channel Segment	% Difference in Gradient
D	F	40.8%
D	A	49.8%
C	E	37.9%
C	G	41.5%
Upstream Transition		
E	G	5.8%

Segment	Segment Length (ft)	Segment Gradient
A	255	0.009
B	47	0.000
C	69	0.025
D	76	0.005
E	84	0.016
F	160	0.008
G	92	0.015
H	68	0.009

Table 2—Summary of segments used for comparisons

Segment	Range of Manning's n values[1]	# of measured XSs	# of interpolated XSs
A	0.0612-0.00.0691	4	27
C	0.0607-0.0727	3	6
D	0.0624-0.0712	3	8
E	0.0641-0.0705	2	10
F	0.0638-0.0705	2	16
G	0.0631-0.0654	2	12

[1]Obtained using equation from Jarrett (1984): n = 0.39S0.38R-0.16, where S=stream slope; R=hydraulic radius. Jarrett's equation only applied within the following ranges: S = 0.002 to 0.08, R = 0.5 ft to 7 ft. For cross sections outside these ranges, n was computed either from adjacent sections that fell within the ranges, using the guidance of Arcement and Schneider (1987), or from the HEC-RAS recommendations for culvert modeling.

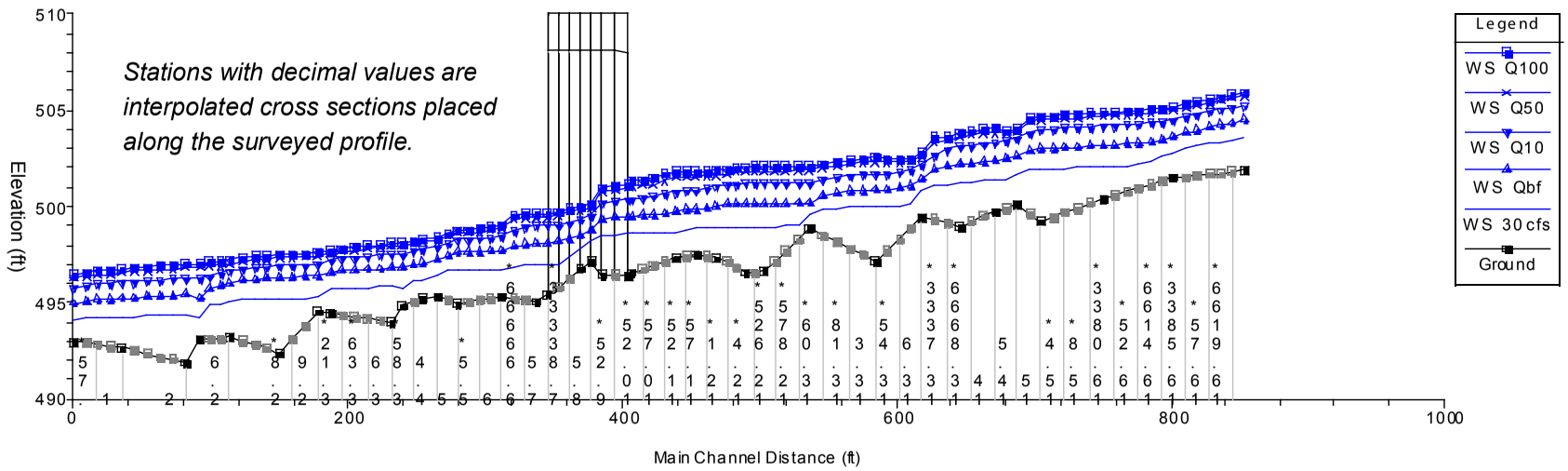

Figure 3—HEC-RAS profile

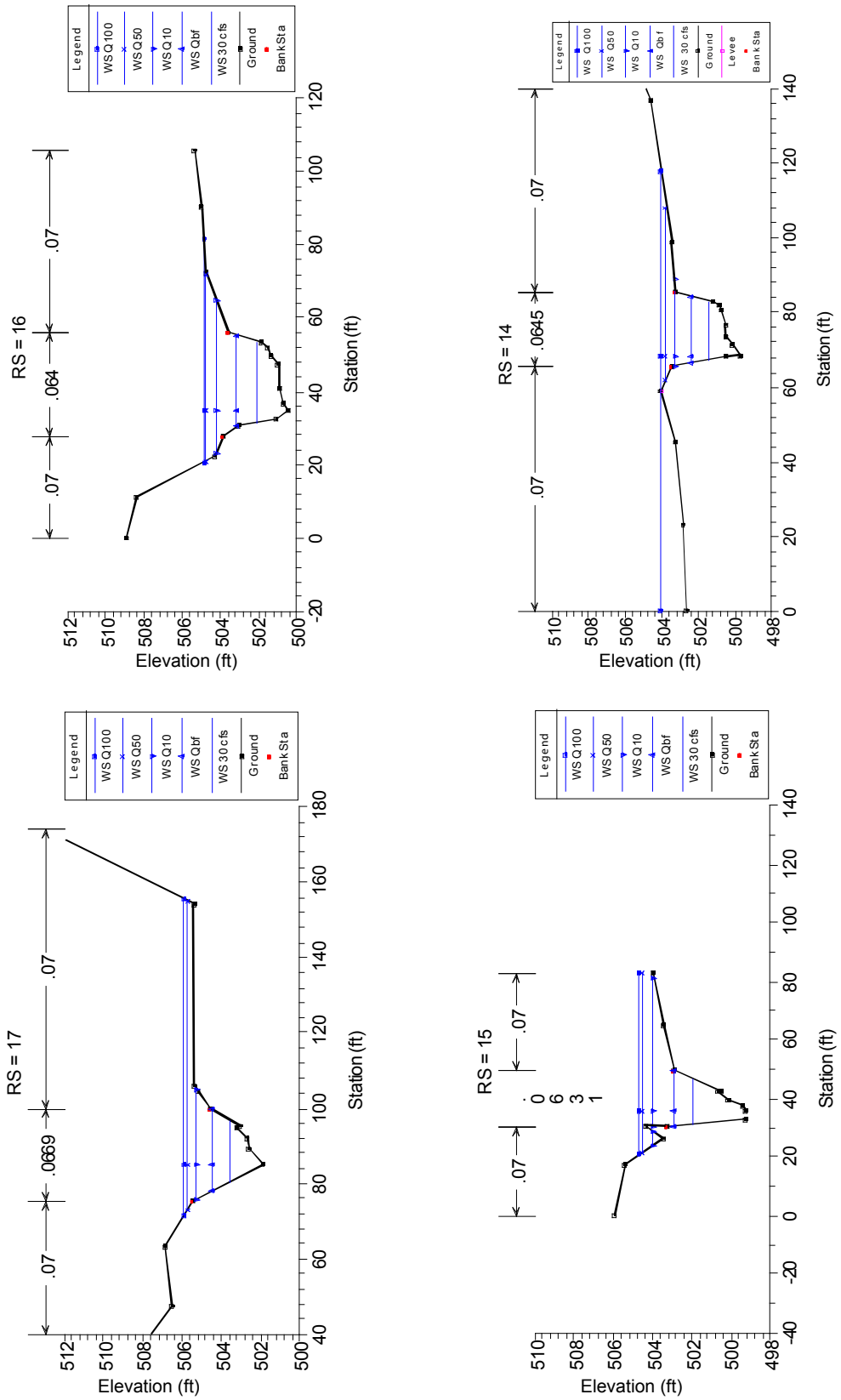

Figure 4—Cross-section plots. Only measured cross sections are included. Manning's n values are included at the top of the cross section. The stationing (RS) corresponds to the stationing on the HEC-RAS profile. Green arrows define the ineffective flow areas. Black arrows represent points identified in the field as the bankfull channel boundary. Only those points identified in the field and supported by hydraulic and topographic analyses are shown below.

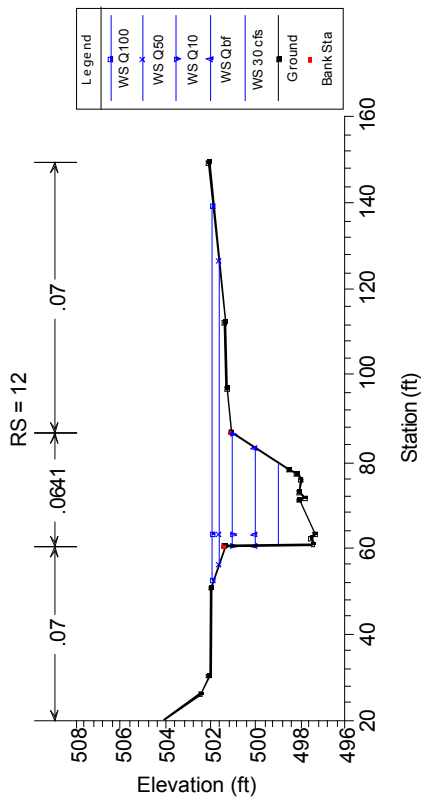

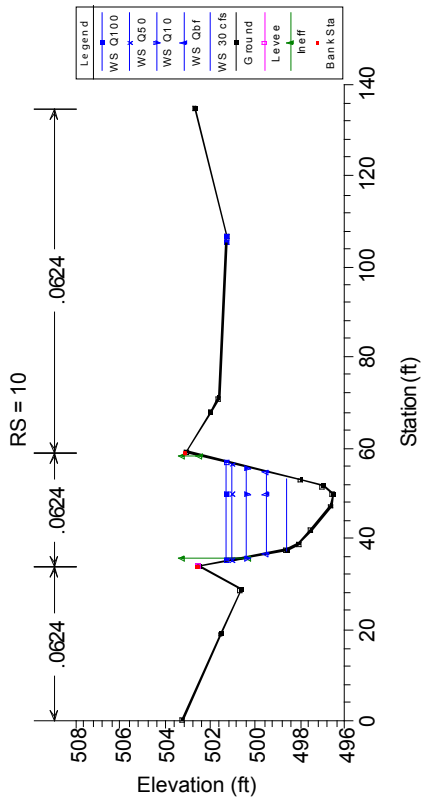

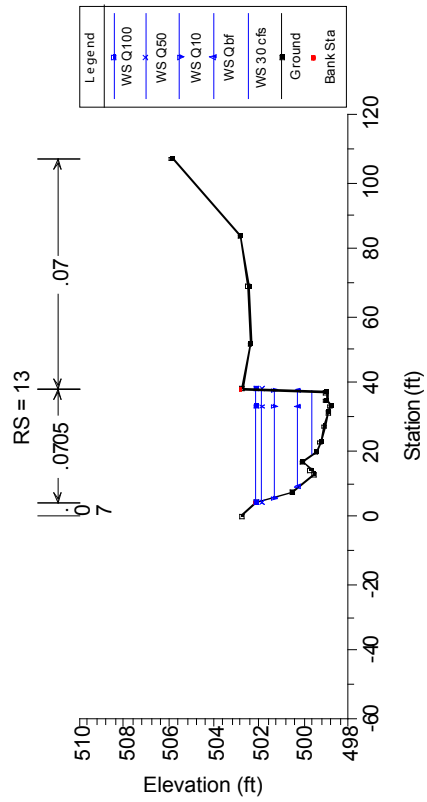

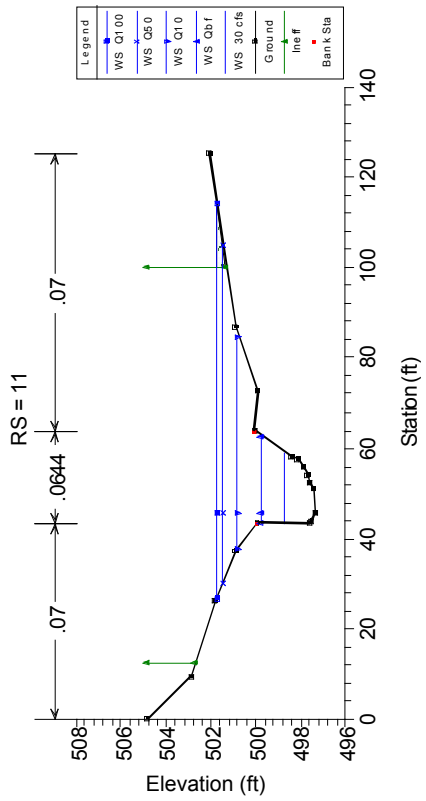

Figure 4—Cross-section plots. Only measured cross sections are included. Manning's n values are included at the top of the cross section. The stationing (RS) corresponds to the stationing on the HEC-RAS profile. Green arrows define the ineffective flow areas. Black arrows represent points identified in the field as the bankfull channel boundary. Only those points identified in the field and supported by hydraulic and topographic analyses are shown below. (continued)

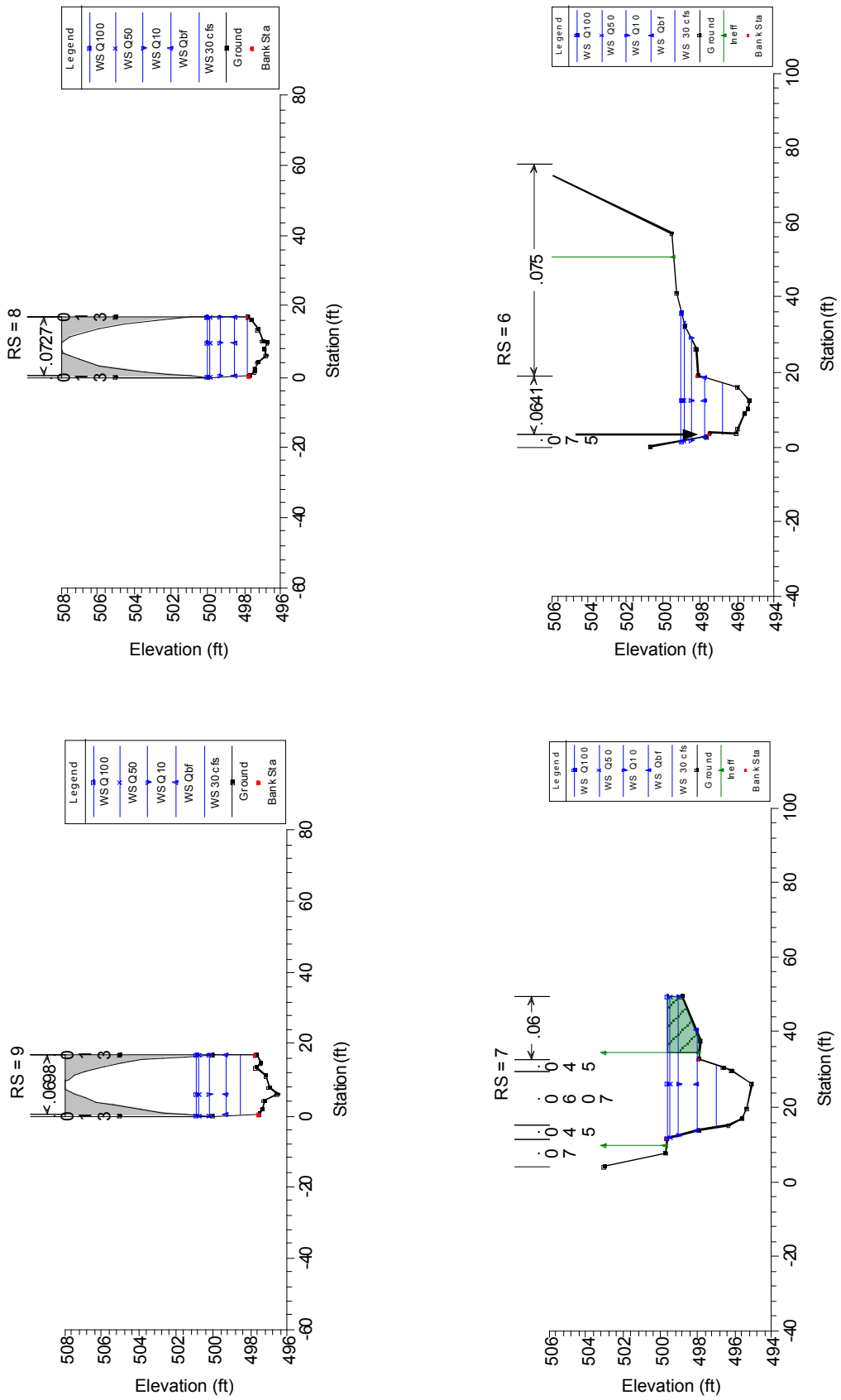

Figure 4—Cross-section plots. Only measured cross sections are included. Manning's n values are included at the top of the cross section. The stationing (RS) corresponds to the stationing on the HEC-RAS profile. Green arrows define the ineffective flow areas. Black arrows represent points identified in the field as the bankfull channel boundary. Only those points identified in the field and supported by hydraulic and topographic analyses are shown below. (continued)

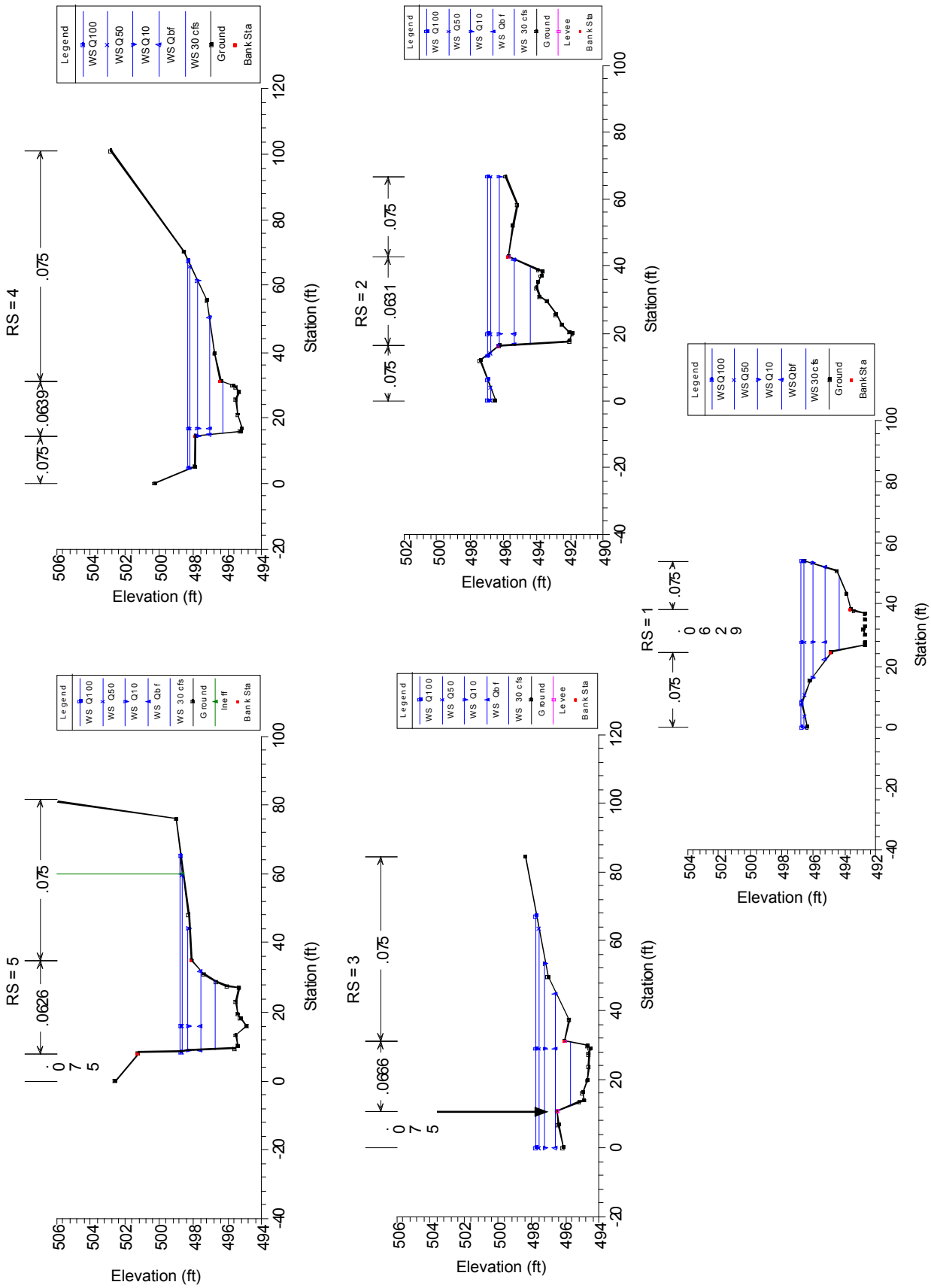

Figure 4—Cross-section plots. Only measured cross sections are included. Manning's n values are included at the top of the cross section. The stationing (RS) corresponds to the stationing on the HEC-RAS profile. Green arrows define the ineffective flow areas. Black arrows represent points identified in the field as the bankfull channel boundary. Only those points identified in the field and supported by hydraulic and topographic analyses are shown below. (continued)

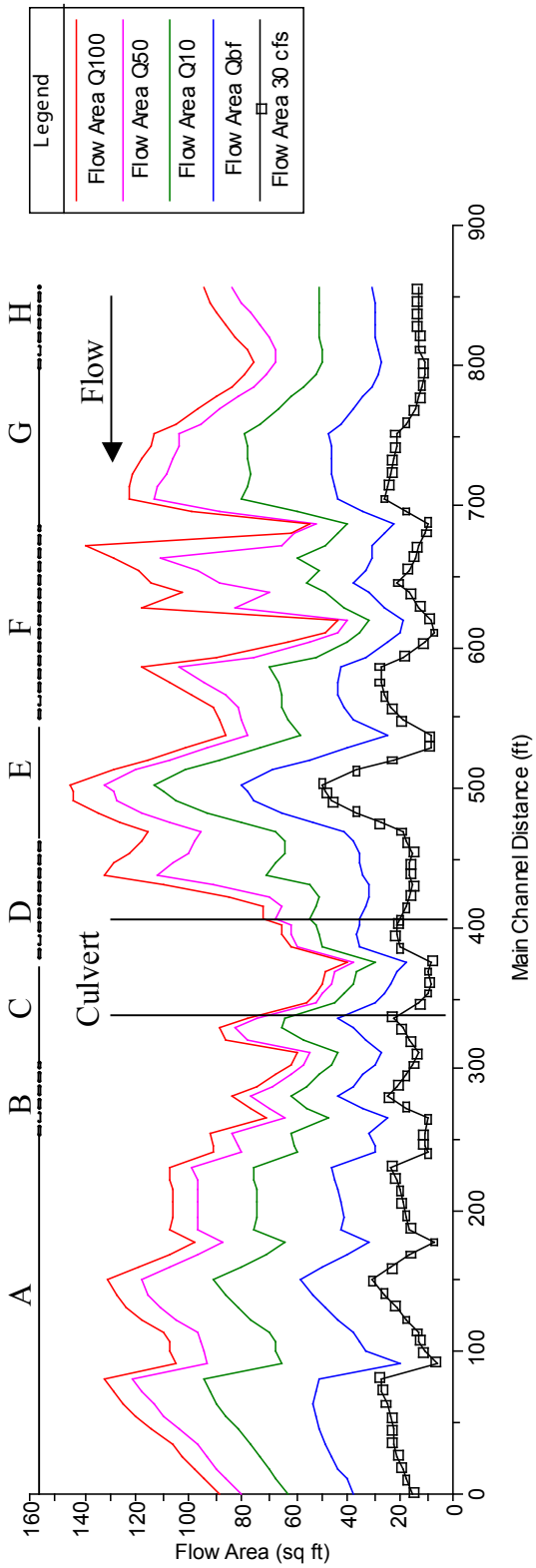

Figure 5—Flow area (total) profile plot.

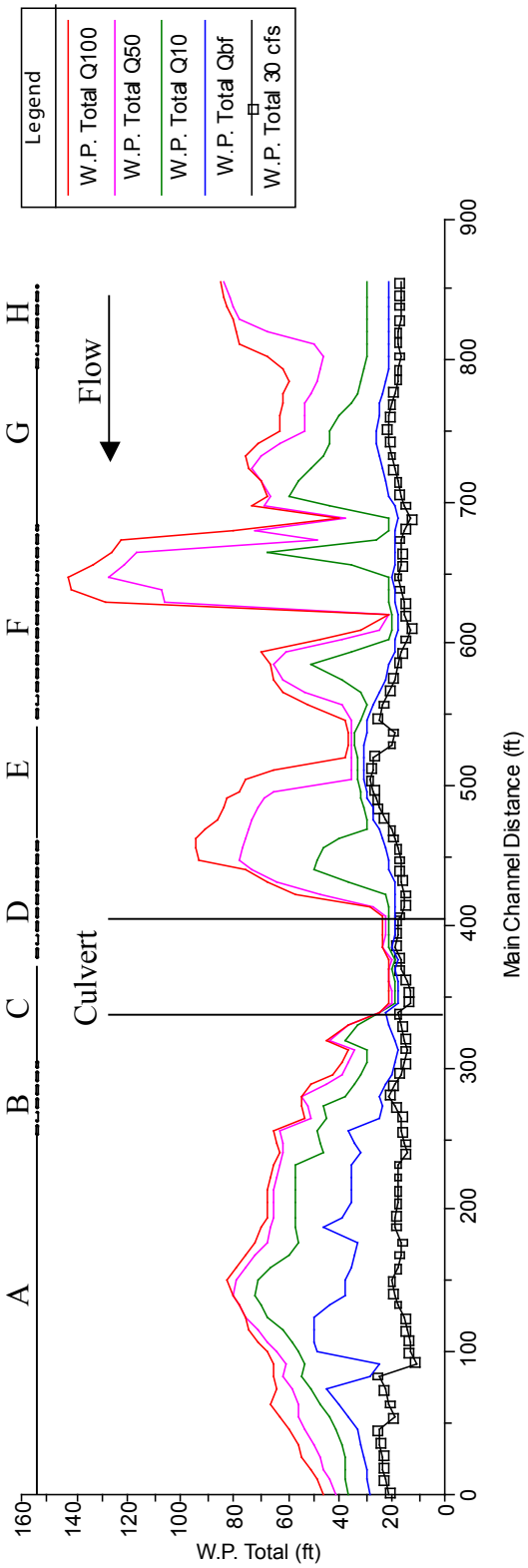

Figure 6—Wetted perimeter.

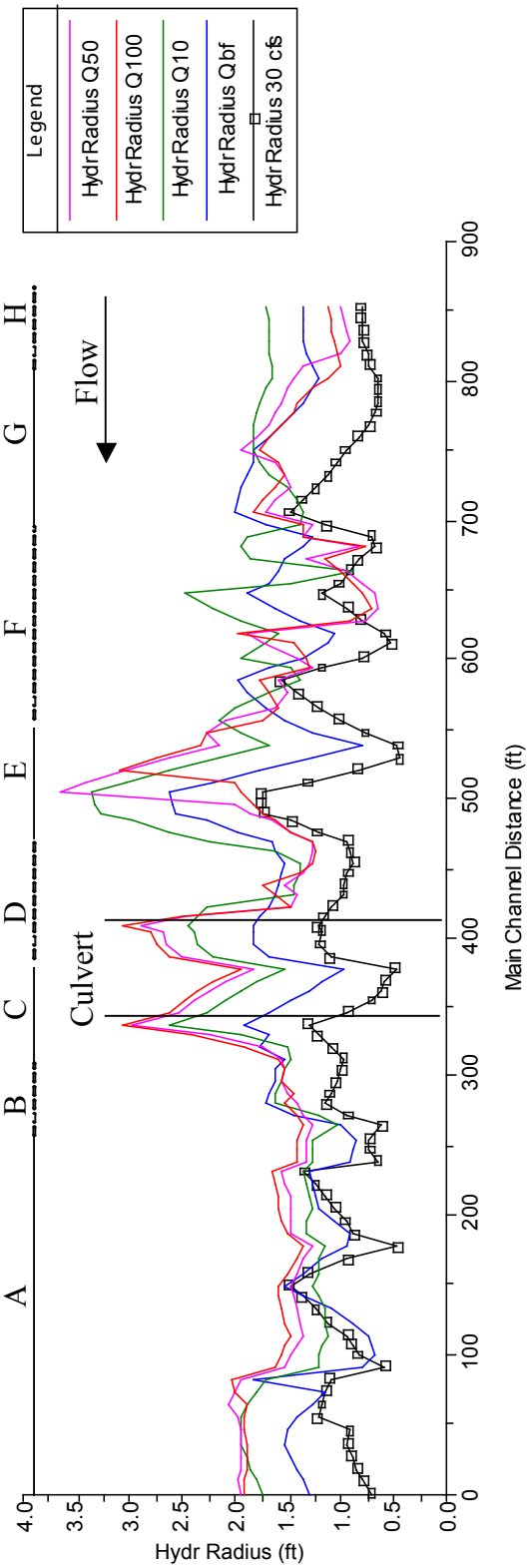

Figure 7—Hydraulic radius.

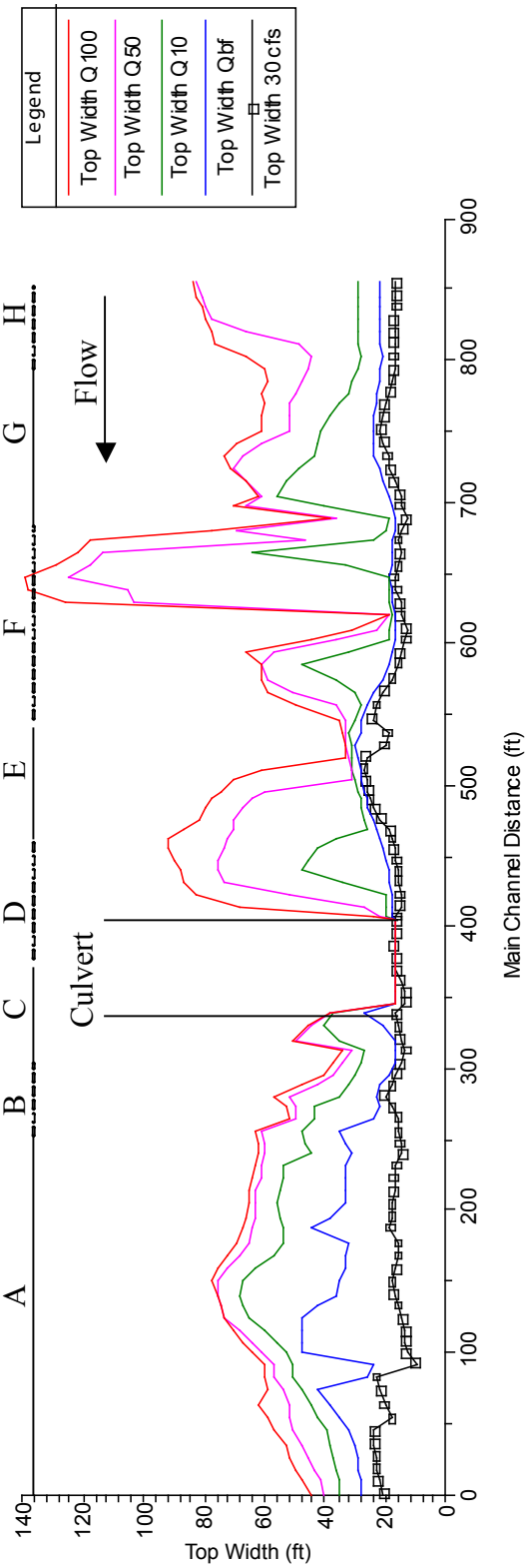

Figure 8—Top width.

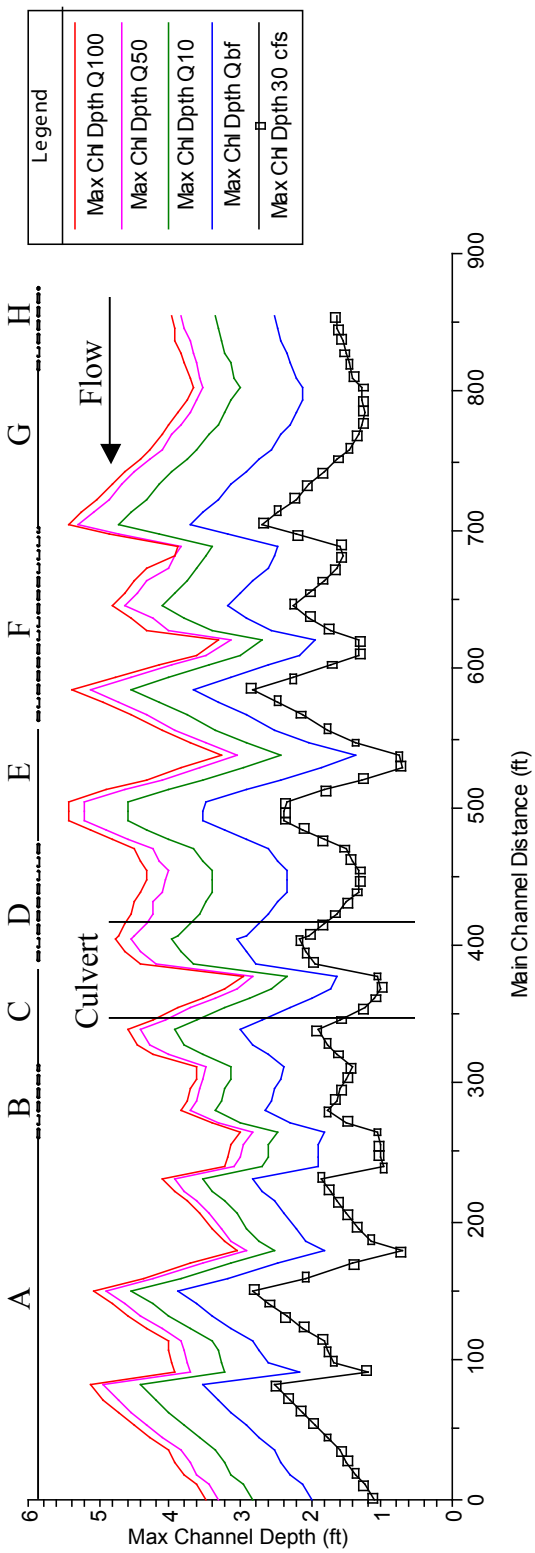

Figure 9—Maximum depth.

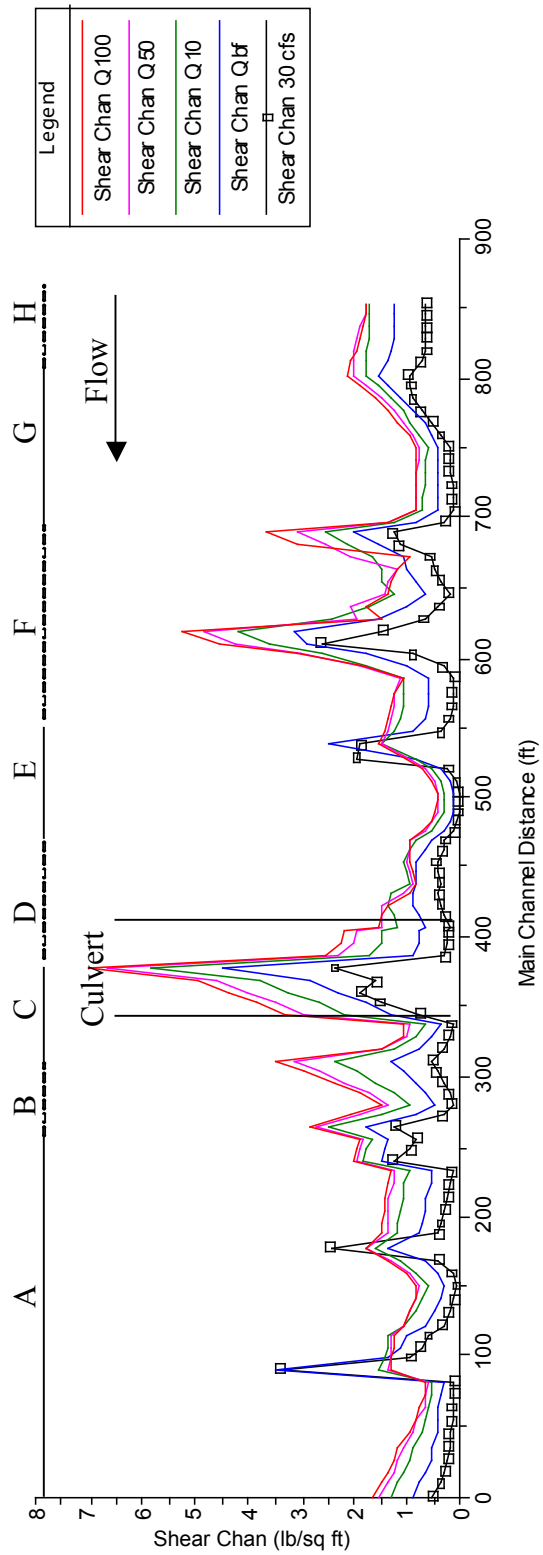

Figure 10—Shear stress (channel) profile.

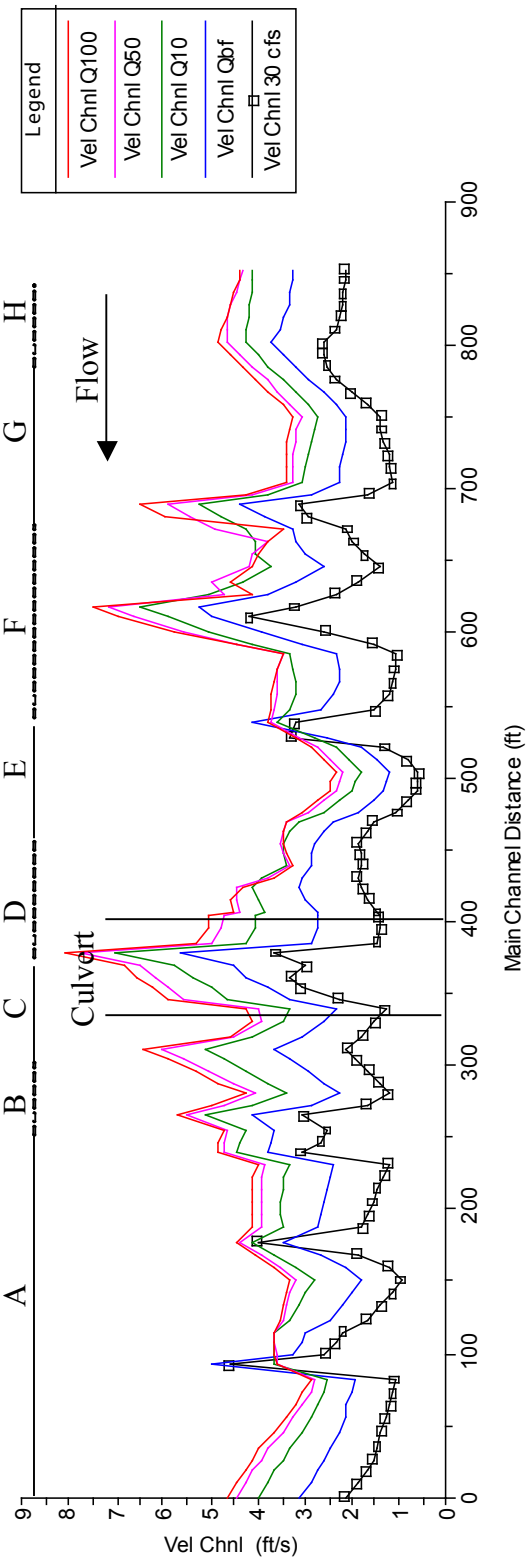

Figure 11—Velocity (channel) profile plot.

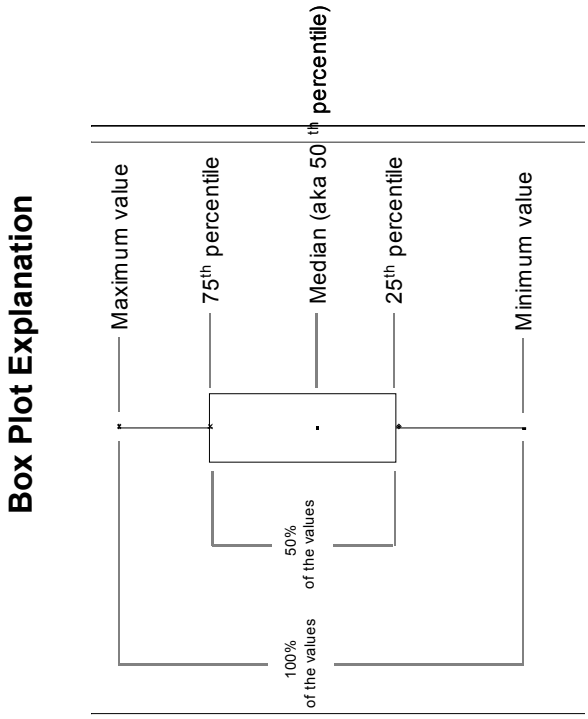

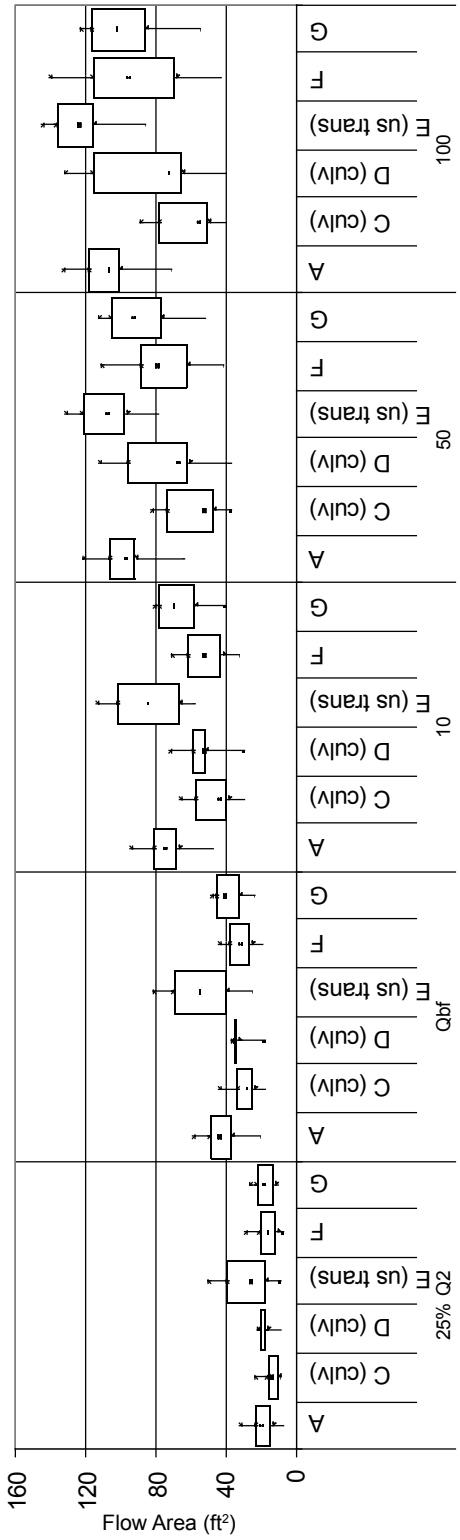

Figure 12—Flow area (total).

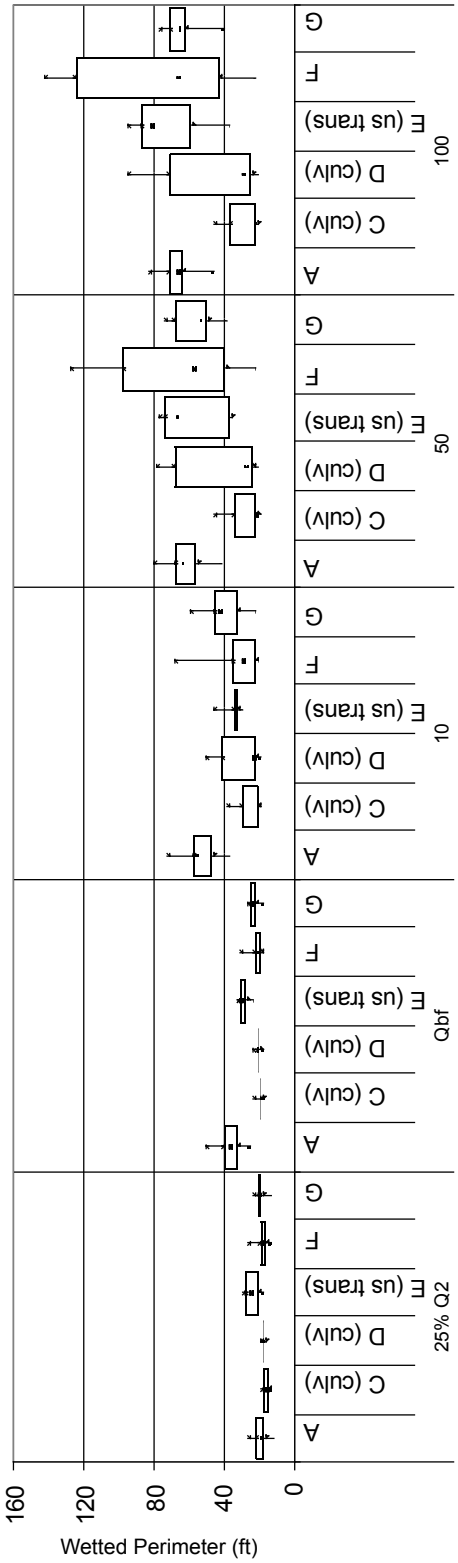

Figure 13—Wetted perimeter.

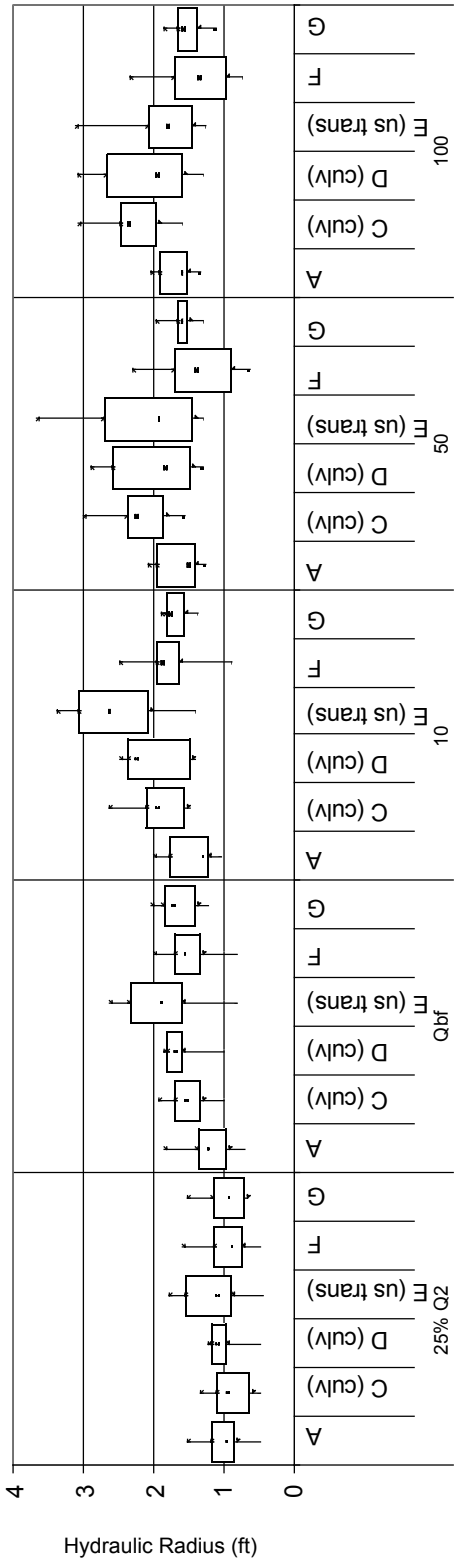

Figure 14—Hydraulic radius.

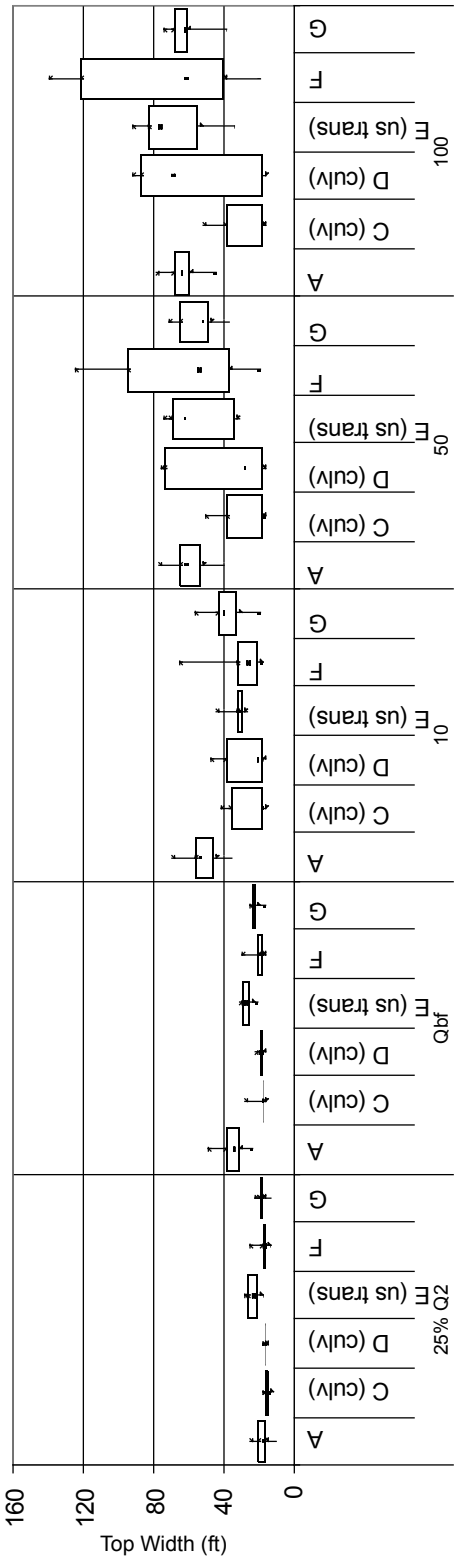

Figure 15—Top width.

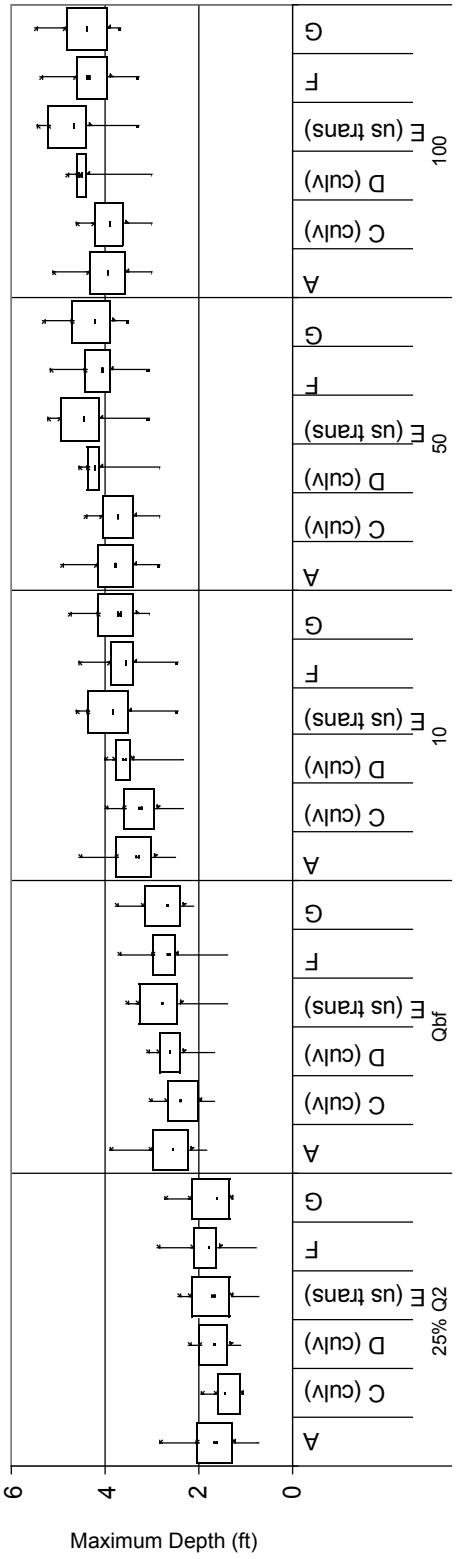

Figure 16—Maximum depth.

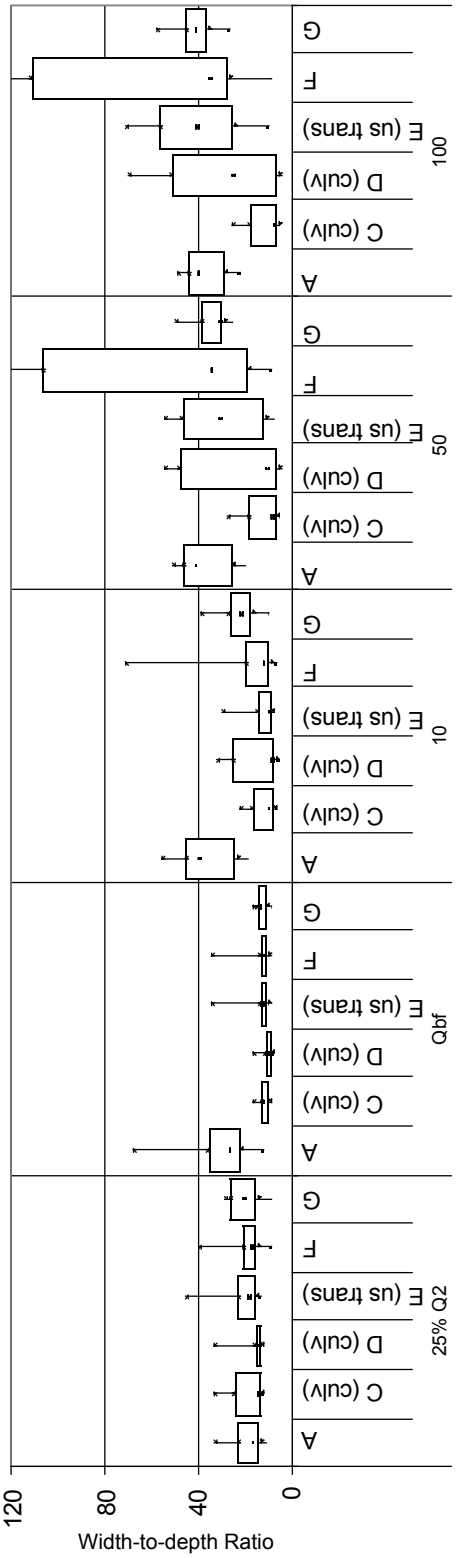

Figure 17—Width-to-depth ratio.

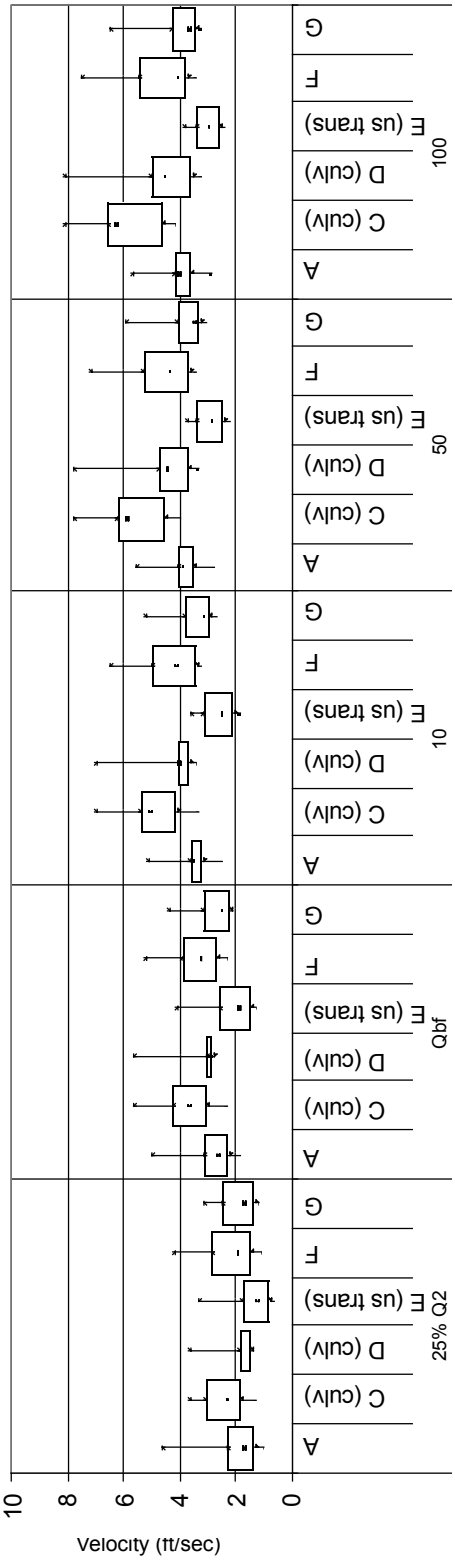

Figure 18—Velocity (channel).

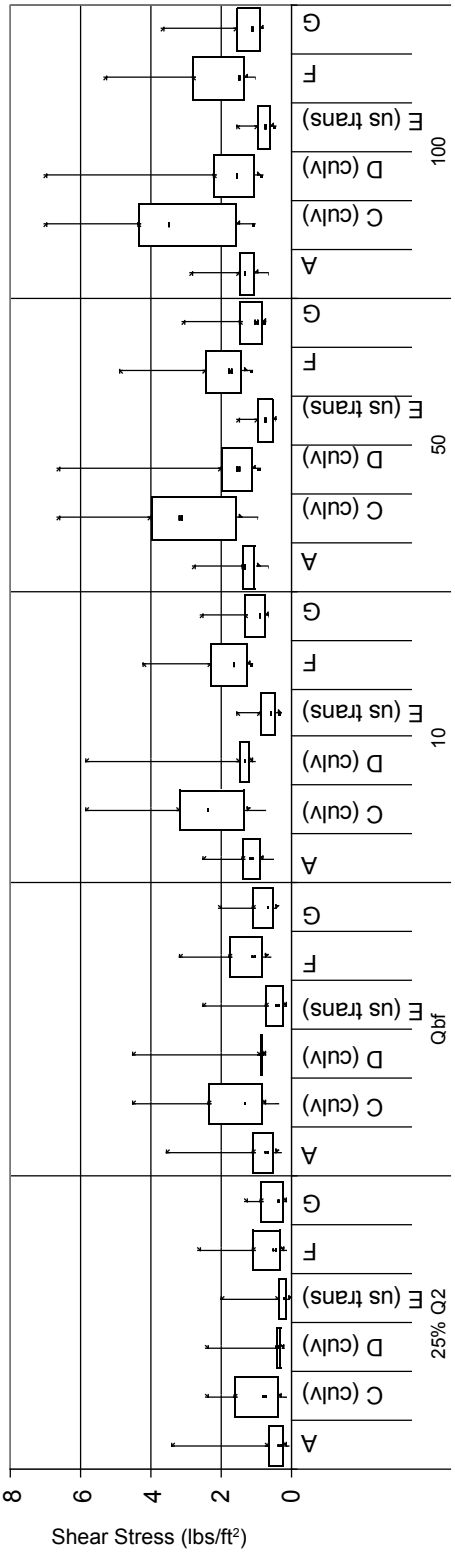

Figure 19—Shear stress (channel).

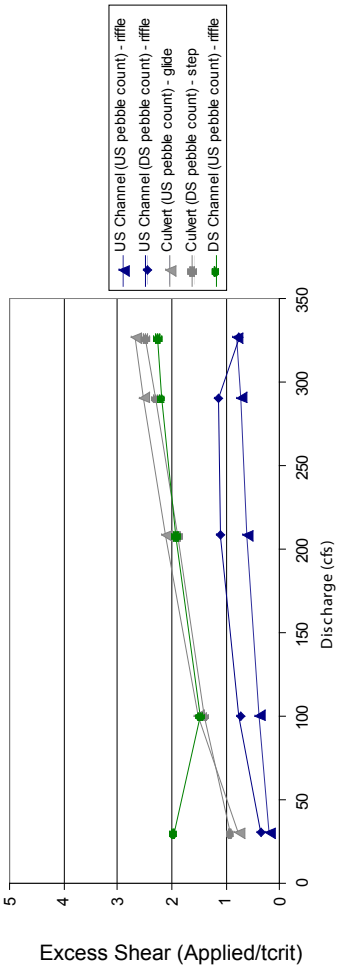

Excess shear stress is the channel shear divided by the critical shear for bed entrainment of the D84 particle size. Values of excess shear greater than 1 indicate bed movement for the D84 particle size.

Figure 20—Excess shear stress.

Table 3—Sum of squared height difference

Reach	XS Location	Unit type	Sum of squared height difference	Within range of channel conditions?
Culvert	US	Glide	0.07	Yes
	DS	Step	0.04	Yes
Upstream	US	Riffle	0.03	
	Middle	Pool	0.09	
	DS	Riffle	0.03	
Downstream	US	Riffle	0.01	
	DS	Pool	0.04	

Table 4—Vertical sinuosity

Segment	Location	Vertical Sinuosity (ft/ft)
A	DS channel	1.001
B	DS channel	1.001
C	Culvert	1.003
D	Culvert	1.001
E	US transition	1.002
F	US channel	1.001
G	US channel	1.001
H	US channel	1.005

Table 5—Depth distribution

Reach	XS Location	25% Q_2	Within range of channel conditions?
Culvert	US	1	No
	DS	5	Yes
Upstream	US	2	
	Middle	2	
	DS	3	
Downstream	US	2	
	DS	11	

Table 6—Habitat unit composition

	Percent of surface area			
Reach	Pool	Glide	Riffle	Step
Culvert	0%	65%	35%	0%
Upstream Channel	67%	0%	31%	2%
Downstream Channel	82%	0%	18%	0%

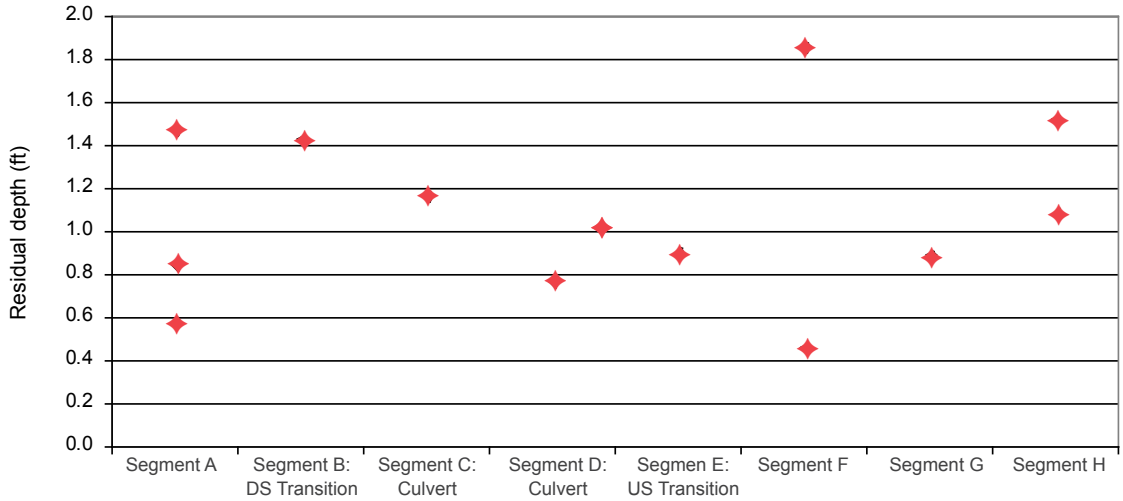

Figure 21—Residual depths

Table 7— Bed material sorting and skewness

Reach	XS Location	Unit Type	Sorting	Within range of channel conditions?	Skewness	Within range of channel conditions?
Culvert	US	Glide	1.82	Yes	0.09	No
	DS	Step	1.90	Yes	0.30	No
Upstream	US	Riffle	2.40		0.47	
	Middle	Pool	2.68		0.36	
	DS	Riffle	2.09		0.52	
Downstream	US	Riffle	1.73		0.40	
	DS	Pool	2.37		0.52	

Table 8—Large woody debris

Reach	Pieces/ Channel Width
Culvert	0.66
Upstream	0.66
Downstream	2.1

Terminology:

US = Upstream

DS = Downstream

RR = Reference reach

XS = Cross section

View upstream through culvert.

View downstream through culvert.

Downstream reference reach—upstream pebble count, riffle.

Downstream reference reach—downstream pebble count, pool.

Upstream reference reach—upstream pebble count, riffle.

Upstream reference reach—middle pebble count, pool.

Upstream reference reach—downstream pebble count, riffle.

Incision induced bank erosion in channel upstream of culvert.

Cross section: Upstream Reference Reach—Upstream Pebble Count

Material	Size Range (mm)	Count	Item %	Cumulative %
sand	<2	13	13%	13%
very fine gravel	2 - 4	4	4%	17%
fine gravel	4 - 5.7	0	0%	17%
fine gravel	5.7 - 8	2	2%	19%
medium gravel	8 - 11.3	2	2%	21%
medium gravel	11.3 - 16	4	4%	25%
coarse gravel	16 - 22.6	7	7%	32%
coarse gravel	22.6 - 32	7	7%	39%
very coarse gravel	32 - 45	10	10%	49%
very coarse gravel	45 - 64	12	12%	62%
small cobble	64 - 90	13	13%	75%
medium cobble	90 - 128	9	9%	84%
large cobble	128 - 180	13	13%	97%
very large cobble	180 - 256	2	2%	99%
small boulder	256 - 362	1	1%	100%
small boulder	362 - 512	0	0%	100%
medium boulder	512 - 1024	0	0%	100%
large boulder	1024 - 2048	0	0%	100%
very large boulder	2048 - 4096	0	0%	100%
bedrock	> 4096	0	0%	100%

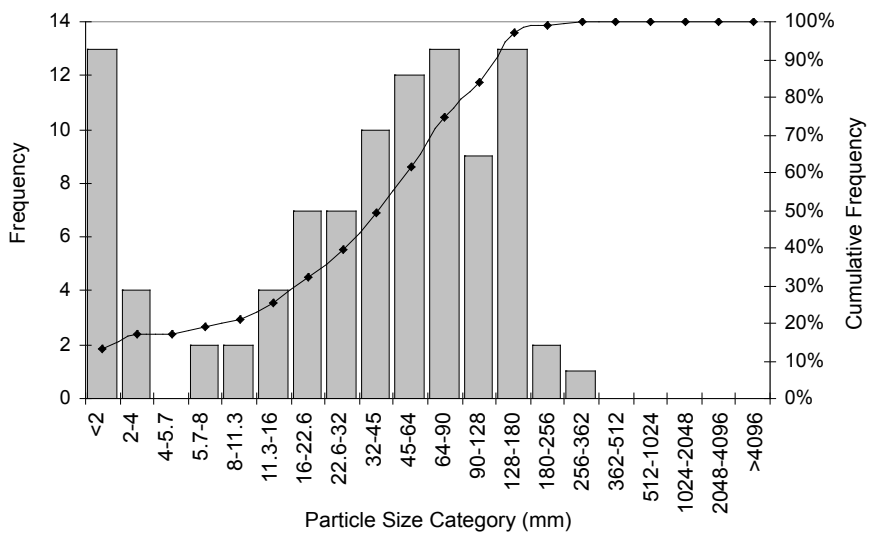

Size Class	Size percent finer than (mm)
D5	1
D16	4
D50	47
D84	127
D95	171
D100	280

Material	Percent Composition
Sand	13%
Gravel	48%
Cobble	37%
Boulder	1%
Bedrock	0%

Sorting Coefficient: 2.40

Skewness Coefficient: 0.47

Cross section: Upstream Reference Reach—Middle Pebble Count

Material	Size Class (mm)	Count	Item %	Cumulative %
sand	<2	31	24%	24%
very fine gravel	2 - 4	7	5%	30%
fine gravel	4 - 5.7	2	2%	31%
fine gravel	5.7 - 8	2	2%	33%
medium gravel	8 - 11.3	6	5%	38%
medium gravel	11.3 - 16	9	7%	45%
coarse gravel	16 - 22.6	5	4%	48%
coarse gravel	22.6 - 32	11	9%	57%
very coarse gravel	32 - 45	9	7%	64%
very coarse gravel	45 - 64	8	6%	70%
small cobble	64 - 90	20	16%	86%
medium cobble	90 - 128	11	9%	95%
large cobble	128 - 180	7	5%	100%
very large cobble	180 - 256	0	0%	100%
small boulder	256 - 362	0	0%	100%
small boulder	362 - 512	0	0%	100%
medium boulder	512 - 1024	0	0%	100%
large boulder	1024 - 2048	0	0%	100%
very large boulder	2048 - 4096	0	0%	100%
bedrock	Bedrock	0	0%	100%

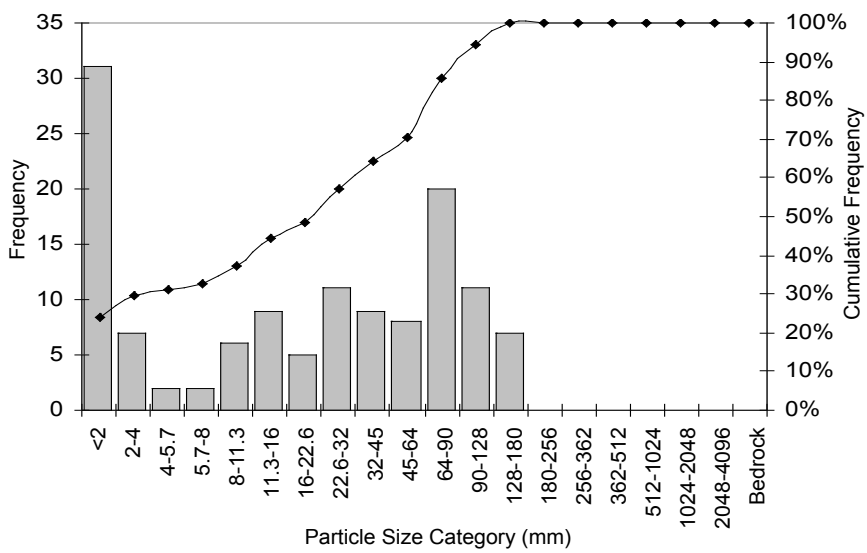

Size Class	Size percent finer than (mm)
D5	1
D16	1
D50	24
D84	88
D95	128
D100	170

Material	Percent Composition
Sand	24%
Gravel	46%
Cobble	30%
Boulder	0%
Bedrock	0%

Sorting Coefficient: 2.68

Skewness Coefficient: 0.36

Cross section: Upstream Reference Reach—Downstream Pebble Count

Material	Size Class (mm)	Count	Item %	Cumulative %
sand	<2	9	8%	8%
very fine gravel	2 - 4	2	2%	10%
fine gravel	4 - 5.7	0	0%	10%
fine gravel	5.7 - 8	3	3%	13%
medium gravel	8 - 11.3	7	6%	19%
medium gravel	11.3 - 16	4	4%	23%
coarse gravel	16 - 22.6	5	5%	27%
coarse gravel	22.6 - 32	6	5%	33%
very coarse gravel	32 - 45	9	8%	41%
very coarse gravel	45 - 64	9	8%	49%
small cobble	64 - 90	23	21%	70%
medium cobble	90 - 128	11	10%	80%
large cobble	128 - 180	15	14%	94%
very large cobble	180 - 256	5	5%	98%
small boulder	256 - 362	2	2%	100%
small boulder	362 - 512	0	0%	100%
medium boulder	512 - 1024	0	0%	100%
large boulder	1024 - 2048	0	0%	100%
very large boulder	2048 - 4096	0	0%	100%
bedrock	Bedrock	0	0%	100%

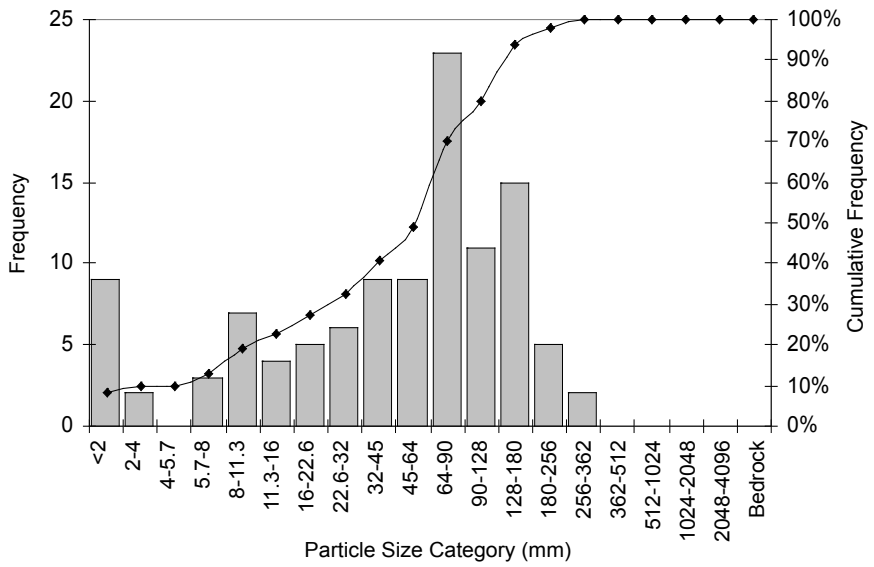

Size Class	Size percent finer than (mm)
D5	1
D16	10
D50	66
D84	130
D95	210
D100	280

Material	Percent Composition
Sand	8%
Gravel	41%
Cobble	49%
Boulder	2%
Bedrock	0%

Sorting Coefficient: 2.09

Skewness Coefficient: 0.52

Cross section: Culvert—Upstream Pebble Count

Material	Size Class (mm)	Count	Item %	Cumulative %
sand	<2	4	4%	4%
very fine gravel	2 - 4	0	0%	4%
fine gravel	4 - 5.7	1	1%	5%
fine gravel	5.7 - 8	4	4%	9%
medium gravel	8 - 11.3	2	2%	11%
medium gravel	11.3 - 16	2	2%	13%
coarse gravel	16 - 22.6	8	8%	21%
coarse gravel	22.6 - 32	12	12%	33%
very coarse gravel	32 - 45	12	12%	45%
very coarse gravel	45 - 64	4	4%	49%
small cobble	64 - 90	8	8%	56%
medium cobble	90 - 128	11	11%	67%
large cobble	128 - 180	12	12%	79%
very large cobble	180 - 256	5	5%	84%
small boulder	256 - 362	9	9%	93%
small boulder	362 - 512	4	4%	97%
medium boulder	512 - 1024	3	3%	100%
large boulder	1024 - 2048	0	0%	100%
very large boulder	2048 - 4096	0	0%	100%
bedrock	Bedrock	0	0%	100%

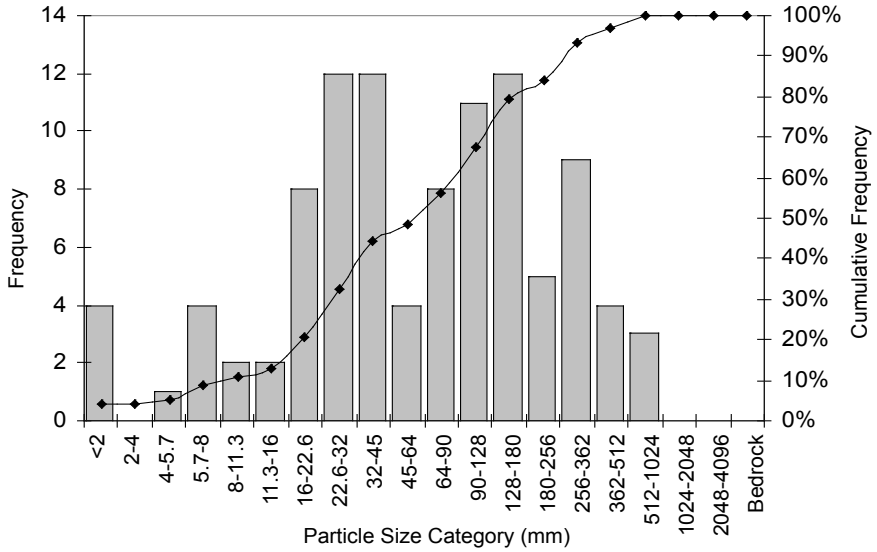

Size Class	Size percent finer than (mm)
D5	6
D16	20
D50	70
D84	240
D95	406
D100	610

Material	Percent Composition
Sand	4%
Gravel	45%
Cobble	36%
Boulder	16%
Bedrock	0%

Sorting Coefficient: 1.82

Skewness Coefficient: 0.09

Cross section: Culvert—Downstream Pebble Count

Material	Size Class (mm)	Count	Item %	Cumulative %
sand	<2	4	4%	4%
very fine gravel	2 - 4	3	3%	7%
fine gravel	4 - 5.7	1	1%	7%
fine gravel	5.7 - 8	2	2%	9%
medium gravel	8 - 11.3	3	3%	12%
medium gravel	11.3 - 16	4	4%	16%
coarse gravel	16 - 22.6	3	3%	19%
coarse gravel	22.6 - 32	7	7%	25%
very coarse gravel	32 - 45	7	7%	32%
very coarse gravel	45 - 64	15	14%	46%
small cobble	64 - 90	12	11%	57%
medium cobble	90 - 128	9	8%	65%
large cobble	128 - 180	10	9%	75%
very large cobble	180 - 256	15	14%	89%
small boulder	256 - 362	8	7%	96%
small boulder	362 - 512	3	3%	99%
medium boulder	512 - 1024	1	1%	100%
large boulder	1024 - 2048		0%	100%
very large boulder	2048 - 4096		0%	100%
bedrock	Bedrock		0%	100%

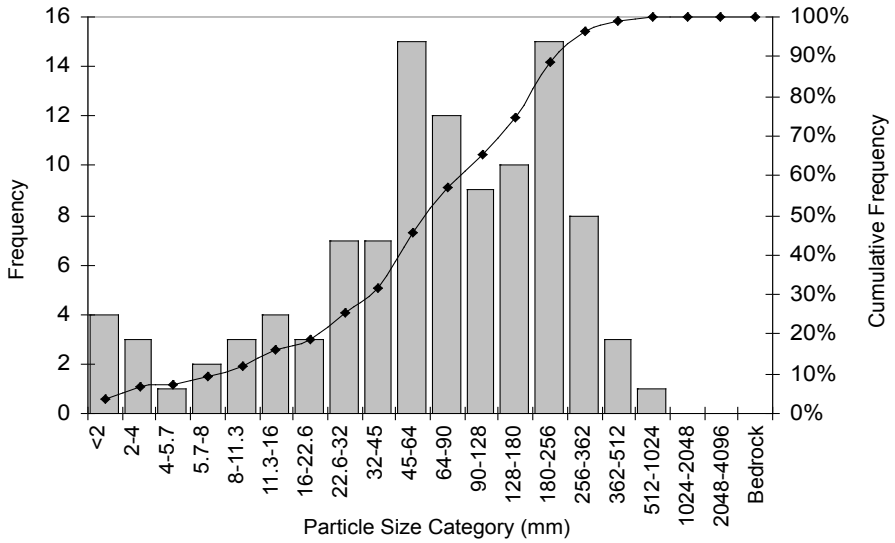

Size Class	Size percent finer than (mm)
D5	3
D16	18
D50	80
D84	210
D95	337
D100	610

Material	Percent Composition
Sand	4%
Gravel	42%
Cobble	43%
Boulder	11%
Bedrock	0%

Sorting Coefficient: 1.90

Skewness Coefficient: 0.30

Cross section: Downstream Reference Reach—Upstream Pebble Count

Material	Size Class (mm)	Count	Item %	Cumulative %
sand	<2	11	11%	11%
very fine gravel	2 - 4	0	0%	11%
fine gravel	4 - 5.7	0	0%	11%
fine gravel	5.7 - 8	4	4%	15%
medium gravel	8 - 11.3	5	5%	20%
medium gravel	11.3 - 16	8	8%	27%
coarse gravel	16 - 22.6	6	6%	33%
coarse gravel	22.6 - 32	13	13%	46%
very coarse gravel	32 - 45	17	17%	63%
very coarse gravel	45 - 64	14	14%	76%
small cobble	64 - 90	16	16%	92%
medium cobble	90 - 128	4	4%	96%
large cobble	128 - 180	4	4%	100%
very large cobble	180 - 256	0	0%	100%
small boulder	256 - 362	0	0%	100%
small boulder	362 - 512	0	0%	100%
medium boulder	512 - 1024	0	0%	100%
large boulder	1024 - 2048	0	0%	100%
very large boulder	2048 - 4096	0	0%	100%
bedrock	Bedrock	0	0%	100%

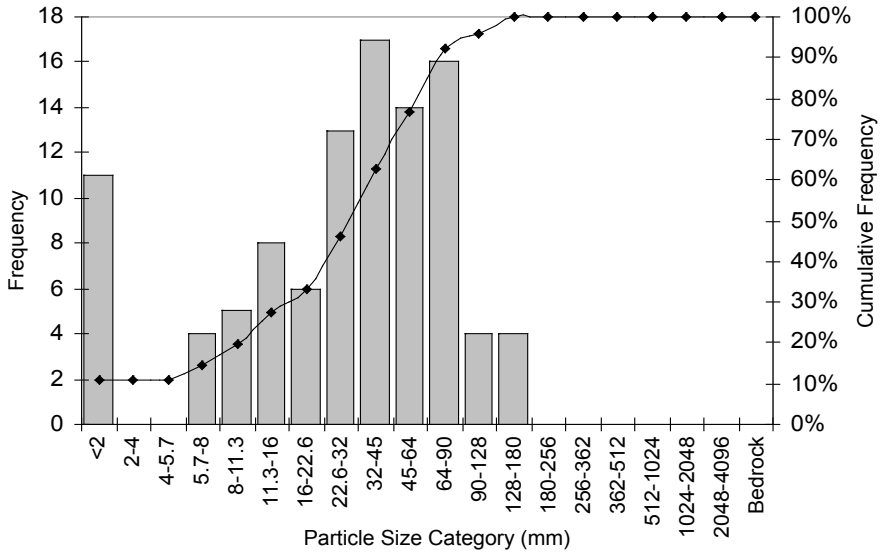

Size Class	Size percent finer than (mm)
D5	1
D16	10
D50	35
D84	70
D95	110
D100	140

Material	Percent Composition
Sand	11%
Gravel	66%
Cobble	24%
Boulder	0%
Bedrock	0%

Sorting Coefficient: 1.73

Skewness Coefficient: 0.40

Cross section: Downstream Reference Reach—Downstream Pebble Count

Material	Size Class (mm)	Count	Item %	Cumulative %
sand	<2	23	21%	21%
very fine gravel	2 - 4	5	5%	25%
fine gravel	4 - 5.7	2	2%	27%
fine gravel	5.7 - 8	2	2%	29%
medium gravel	8 - 11.3	2	2%	31%
medium gravel	11.3 - 16	9	8%	39%
coarse gravel	16 - 22.6	12	11%	50%
coarse gravel	22.6 - 32	11	10%	59%
very coarse gravel	32 - 45	19	17%	77%
very coarse gravel	45 - 64	17	15%	92%
small cobble	64 - 90	7	6%	98%
medium cobble	90 - 128	1	1%	99%
large cobble	128 - 180	1	1%	100%
very large cobble	180 - 256	0	0%	100%
small boulder	256 - 362	0	0%	100%
small boulder	362 - 512	0	0%	100%
medium boulder	512 - 1024	0	0%	100%
large boulder	1024 - 2048	0	0%	100%
very large boulder	2048 - 4096	0	0%	100%
bedrock	Bedrock		0%	100%

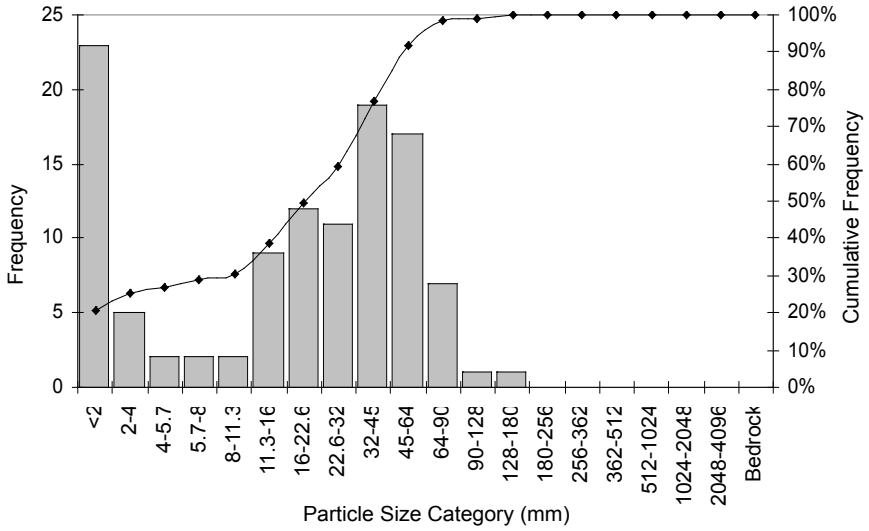

Size Class	Size percent finer than (mm)
D5	1
D16	1
D50	23
D84	55
D95	70
D100	130

Material	Percent Composition
Sand	21%
Gravel	71%
Cobble	8%
Boulder	0%
Bedrock	0%

Sorting Coefficient: 2.37

Skewness Coefficient: 0.52