YOUNGS CREEK

Site Information

Site Location:	Willamette NF, Forest Rd 21		
Year Installed:	Circa 2002		
Lat/Long:	122°26'10.61"W		
	43°30'40.77"N	**Watershed Area (mi²):**	2.92
Stream Slope (ft/ft)[1]:	0.0635	**Channel Type:**	Step-pool
Bankfull Width (ft):	13.5	**Survey Date:**	March 21 2007

1Water surface slope extending up to 20 channel widths up and downstream of crossing.

Culvert Information

Culvert Type:	Pipe arch	**Culvert Material:**	Annular CMP
Culvert Width:	14 ft	**Outlet Type:**	Mitered
Culvert Length:	62 ft	**Inlet Type:**	Mitered

Pipe Slope (structure slope): 0.067

Culvert Bed Slope: 0.028

(First hydraulic control upstream of inlet to first hydraulic control downstream of outlet.)

Culvert width as a percentage of bankfull width: 1.02

Alignment Conditions: May have been constructed in alignment with previous channel location but channel adjustment upstream has resulted in the culvert being off-alignment. Scour of culvert bed on left side at inlet may be partially due to alignment.

Bed Conditions: Well-graded bed material distribution in culvert. Large cobbles/boulders forming steps.

Pipe Condition: Some structure joints open but not leaking. Little to no rust.

Hydrology

Discharge (cfs) for indicated recurrence interval

25% 2-yr	Q_{bf}[2]	2-year	5-year	10-year	50-year	100-year
21	60	85	135	170	250	286

[2]Bankfull flow estimated by matching modeled water surface elevations to field-identified bankfull elevations.

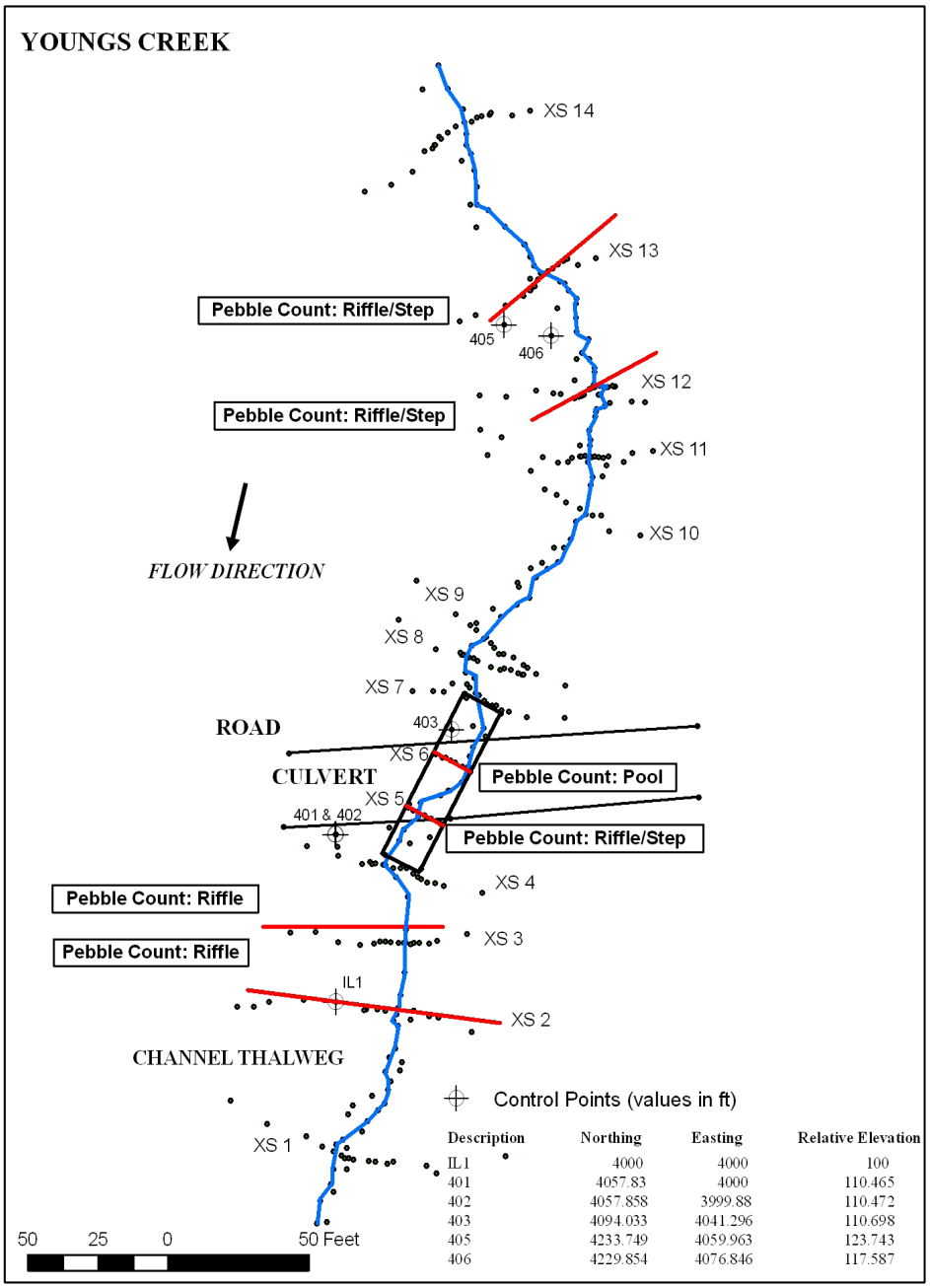

Description	Northing	Easting	Relative Elevation
IL1	4000	4000	100
401	4057.83	4000	110.465
402	4057.858	3999.88	110.472
403	4094.033	4041.296	110.698
405	4233.749	4059.963	123.743
406	4229.854	4076.846	117.587

Points represent survey points

Figure 1—Plan view map.

HISTORY

The Youngs Creek culvert was installed in 2002 and replaced a smaller, closed-bottom pipe. Bed material was placed into the culvert during construction, and is assumed to have been sourced from the channel bed beneath the previous culvert. There was no sorting or grading of material during placement and no bedforms or banks were constructed in the culvert. The culvert was placed on the existing horizontal alignment of the old structure and was placed on a vertical alignment between the lower and upper channel slopes. It is possible that the outlet scour pool was filled during construction.

The culvert lost most of the placed material at some point after construction. Since then, in the last year or two, stream headcutting and channel edge adjustment sediments have been deposited in the culvert. The culvert has not experienced overtopping. There has been no significant maintenance or management of the site since construction.

The above information was furnished by Kim Johansen, USFS.

An assessment of nearby stream gauges suggests that nothing more than a 5-year recurrence interval event has occurred in the region since construction.

SITE DESCRIPTION

The Youngs Creek culvert is a large pipe arch mitered to conform to the roadfill. There are a series of cascades and steps just upstream of the inlet to the culvert. This steep channel transitions to a flatter slope through a scour pool exposing the bottom of the pipe through the inlet. Below the inlet, material from upstream has deposited on top of the original fill, altering the grade. Grade through the culvert is controlled by the downstream aggradation of material, evident by the drop in channel elevation at the outlet.

The upstream representative reach was located above a long cascade. The representative segment consisted of a series of log and rock steps interspersed by plunge pools, backwater pools, and riffles. Small boulders and large cobble comprised the majority of the bed, with the deposition of small gravels and even some fines in the backwater pools. With the exception of a narrow active terrace along the right bank, the channel abutted the valley walls. Downed trees were prevalent through this reach, adding structure to the channel and providing cover.

Downstream of the culvert, the channel flows through oversized angular rocks which appear to be sourced from either the culvert or the adjacent banks which were lined with riprap. Riprap lines both banks upstream and downstream of the culvert. Debris from roadside clearing covered the section of channel downstream of the outlet. Below this, the channel consisted of a series of steep riffles interspersed by pools. A tall terrace along the left bank confines flows to the channel. Below the downstream boundary of the downstream reach, the channel opens up to a wide flood plain before joining the Middle Fork Willamette. While some wood was present in the channel, it did not serve a structural role as it did in the upstream reach.

The crossing is located in an area of gradual valley transition from the Youngs Creek stream valley into the broad flood-plain valley of the Middle Fork Willamette. The greatest transition occurs a couple hundred feet downstream of the culvert.

SURVEY SUMMARY

Fourteen cross sections and a longitudinal profile were surveyed along Youngs Creek in March 2007 to characterize the culvert, an upstream reference reach, and a downstream reference reach. Representative cross sections were taken in the culvert through a pool/glide and at a steep riffle/step. One additional cross section

was surveyed upstream to characterize the inlet as well as the contraction of flow. Another two cross sections were surveyed downstream of the culvert to characterize the outlet and the expansion of flow.

Representative cross sections in the upstream channel were taken through a step and between steps. An additional two sections were taken to characterize the upstream and downstream boundaries of the representative reach. Representative cross sections in the downstream channel were taken through two riffles. An additional two sections were taken to characterize the upstream and downstream boundaries of the reach.

PROFILE ANALYSIS SEGMENT SUMMARY

The profile analysis resulted in a total of nine profile segments. The two segments downstream of the outlet, which had similar gradient, were not combined in order to separate out the outlet transition segment for analysis. The culvert consisted of one profile segment. The culvert segment had gradient comparable to one representative profile segment in the upstream channel. Two upstream transition segments were each comparable to one representative profile segment in the upstream channel. The downstream transition segment was comparable to two representative profile segments, one in the upstream channel and one in the downstream channel. See figure 2 and table 1.

SCOUR CONDITIONS

Observed conditions

Structure scour – This closed-bottom culvert has been scoured to the base at the upstream end (on right bank for 2 feet and on left bank for 20 feet). The main flow is along the side/base of the culvert on the left side at the upstream end and along the right side at the downstream end.

Culvert-bed adjustment – According to the structure designer, originally placed material scoured out of the pipe and it subsequently refilled. Slope measurements indicate there has been a flattening of the culvert bed profile (assuming the original culvert bed was constructed at the same gradient as the structure). The pipe slope is 6.7 percent compared to a bed slope of 2.8 percent.

Profile characteristics – The profile has a concave shape through the crossing, with the maximum concavity occurring at the inlet and just upstream. The profile shape may be partly due to the natural valley transition occurring in this area as the Youngs Creek valley meets the broad valley of the Middle Fork Willamette. However, site observations suggest that much of the shape is also due to crossing-related channel incision at the inlet and upstream. The culvert may have been placed lower in the profile than the original stream. This could relate to channel adjustments from the previous culvert or may also be a result of restrictions in height imposed by the height of the road prism.

Residual depths – Culvert residual depths have a similar and slightly greater range than those in the representative profile segment (F) (figure 21). The upstream transition segments (D and E) have greater residual depths than the corresponding profile segment (I), but there was only one residual depth in segment I. The downstream transition segment had lower residual depths than corresponding profile segments.

Substrate – Culvert bed material distributions are similar to the natural channel, with generally more boulder-sized material in the natural channel. Pebble counts are provided at the end of this summary. Bed-material sorting in the culvert was lower than the range found in the natural channel but values did not diverge from the range significantly. Culvert-skewness values were within the range of the natural channel.

Predicted conditions

Cross-section characteristics – Cross-section characteristics vary between the culvert and the corresponding profile segment (F) for most of the cross-section metrics beginning at or above the Q_{10} (figures 5 through 9 and 12 through 17). These results reflect the flow contraction created by the pipe. The upstream- and downstream-transition segments have values that are mostly within the range of their corresponding profile segments, except the upstream transitions have lower widths and greater depths than the natural channel at high flows.

Shear stress – The range of shear stress in the culvert becomes less than that of the natural channel segment (F) as flows increase above the 25-percent Q_2, but maximum shear stress values remain similar (figures 10 and 19). Shear stress in the upstream transition segment E becomes greater than the corresponding profile segment (I) above the Q_{bf}, but the other transition segment (D downstream) is within the range of segment I. Shear stress in the downstream transition remains within the range of the corresponding profile segments for all modeled flows.

Excess shear – The excess shear analysis suggests that the culvert excess shear may be at the lower end of the range of that found in the natural channel (figure 20).

Velocity – Velocity in the culvert has a broader range of that found in the natural channel but the median values remain similar for all flows (figures 11 and 18).

Scour summary

Original material has scoured out of the pipe but has been replaced by material from upstream. This is an acceptable scenario for a stream-simulation type design; except that the new culvert bed has adjusted to a flatter slope than the originally constructed bed (assuming the original culvert bed was constructed at the same gradient as the structure). There is now scour to the culvert base at the upstream end of the pipe and aggraded material at the downstream end. The reduced slope of the bed reduces shear stress and may prevent the efficient transport of material through the pipe. Slope adjustments may be related to the culvert being placed at a low elevation in the profile, possibly due to height limitations imposed by the height of the road prism.

Site observations suggest that the low elevation of the inlet may have initiated scour at the inlet area, which triggered upstream incision. Material sourced from the bed and banks as a result of this incision then collected upstream of the inlet (visible as cobbles and small boulders just upstream of the inlet), possibly during a large event when the culvert was backwatered (debris plugging?). The aggraded material upstream of the inlet resulted in lateral boundary adjustment, resulting in the sinuous planform upstream of the inlet.

The historical occurrence of material scouring out of the culvert indicates a risk of loss of bed material; however, the excess shear analysis and the fact that the culvert re-filled suggest that any scour will likely be replaced by material moving in from upstream.

AOP CONDITIONS

Cross-section complexity – The sum of squared height difference in the downstream culvert cross section is within the range of those in the channel (table 3). The sum of squared height difference in the upstream culvert cross section is lower than the range in the natural channel, but the habitat units differ (pool in culvert versus riffle/step in channel), making comparisons difficult.

Profile complexity – Vertical sinuosity in the culvert is lower than that found in the natural channel (table 4). The abundance of wood in the natural channel may account for greater profile complexity.

Depth distribution – Depth distribution (at the 25-percent Q_2) in the culvert is at the upper range or above that which is found in the natural channel (table 5). The high values in the culvert are related to the aggraded bar material that is just inundated at the 25-percent Q_2 (see figure 4).

Habitat units – The culvert has a greater abundance of pool habitat compared to the natural channel (table 6), which is related to the flatter profile that allows for a long pool in the upstream portion of the culvert that is in contrast to the short step-pools typically found in the natural channel.

Residual depths – Culvert residual depths have a similar and slightly greater range than those in the representative profile segment (F) (figure 21). The upstream transition segments (D and E) have greater residual depths than the corresponding profile segment (I), but there was only one residual depth in segment I. The downstream transition segment had lower residual depths than corresponding profile segments.

Bed material – Culvert bed material distributions are similar to the natural channel, with generally more boulder-sized material in the natural channel. Pebble counts are provided at the end of this summary.

Large woody debris – There was no LWD present in the culvert (Table 8). The representative channel had moderate to high LWD abundance. LWD formed steps and scour pools in the channel outside the crossing and played a primary role in habitat unit creation and complexity. Features in the culvert did not mimic the role of wood in the natural channel.

AOP summary

Scour to the base in the upstream portion of the culvert may create lack of bed roughness elements for fish passage. The thalweg also runs along the edge or base of the culvert for much of the length, again indicating a lack of roughness and velocity refuge for migrating fish. And there are fewer boulders in the culvert that are important for providing velocity refuge. Profile complexity is less in the culvert; however, depth distribution is good in the culvert at the 25 percent Q_2, suggesting the availability of channel margin habitat for passage at this flow. At the low flow level during the survey, there was aggraded material along the banks in the culvert that could provide for passage of terrestrial organisms; however, the banks were not continuous through the culvert on either side.

DESIGN CONSIDERATIONS

Inlet scour, upstream incision, and upstream lateral boundary adjustment could likely have been reduced by raising the invert elevation of the culvert bed; however, this may have required raising the elevation of the road prism at considerable expense. Adding stable, embedded boulders into the culvert bed would reduce risk of scour to the culvert base, which is currently occurring. Use of an open-bottom arch at this location would allow for the construction of stable bed elements while not significantly reducing culvert capacity. Creation of continuous banks along the culvert walls would reduce the smooth wall-based flow currently occurring along much of the length and would also benefit terrestrial organism passage.

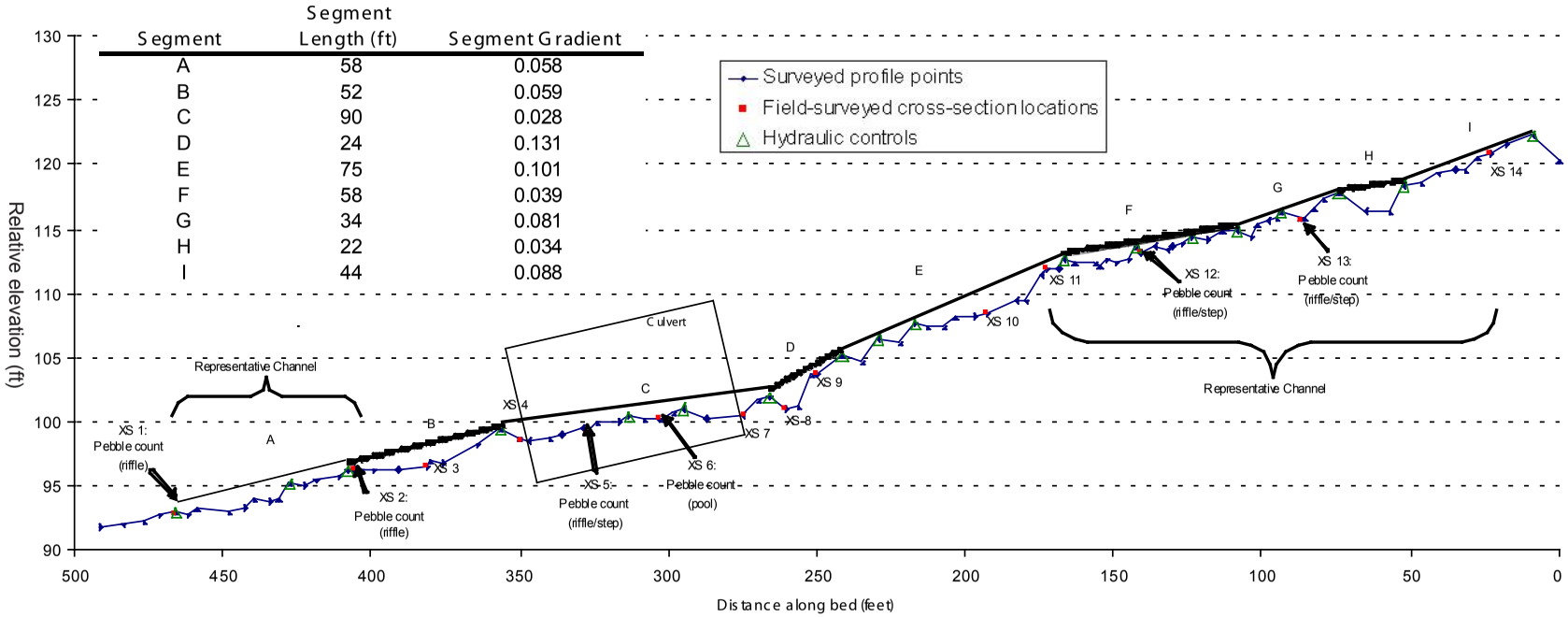

Figure 2—Youngs Creek long profilet.

Table 1—Segment Comparisons

Culvert Segment	Representative Channel Segment	% Difference in Gradient
C	F	27.4%
Upstream Transition		
D	I	32.7%
E	I	12.3%
Downstream Transition		
B	A	1.6%
B	G	26.5%

Table 2—Summary of segments used for comparisons

Segment	Range of Manning's n values[1]	# of measured XSs	# of interpolated XSs
A	0.1417 – 0.1432	1	7
B	0.1415 – 0.1517	2	7
C	0.0929 – 0.1517	4	10
D	0.1206 – 0.136	2	4
E	0.1358 – 0.136	2	9
F	0.1335 – 0.1369	1	9
G	0.1245 – 0.1369	1	6
I	0.1395 – 0.1445	1	6

[1]Obtained using equation from Jarrett (1984): n = 0.39S0.38R-0.16, where S=stream slope; R=hydraulic radius. Jarrett's equation only applied within the following ranges: S = 0.002 to 0.08, R = 0.5 ft to 7 ft. For cross sections outside these ranges, n was computed either from adjacent sections that fell within the ranges, using the guidance of Arcement and Schneider (1987), or from the HEC-RAS recommendations for culvert modeling.

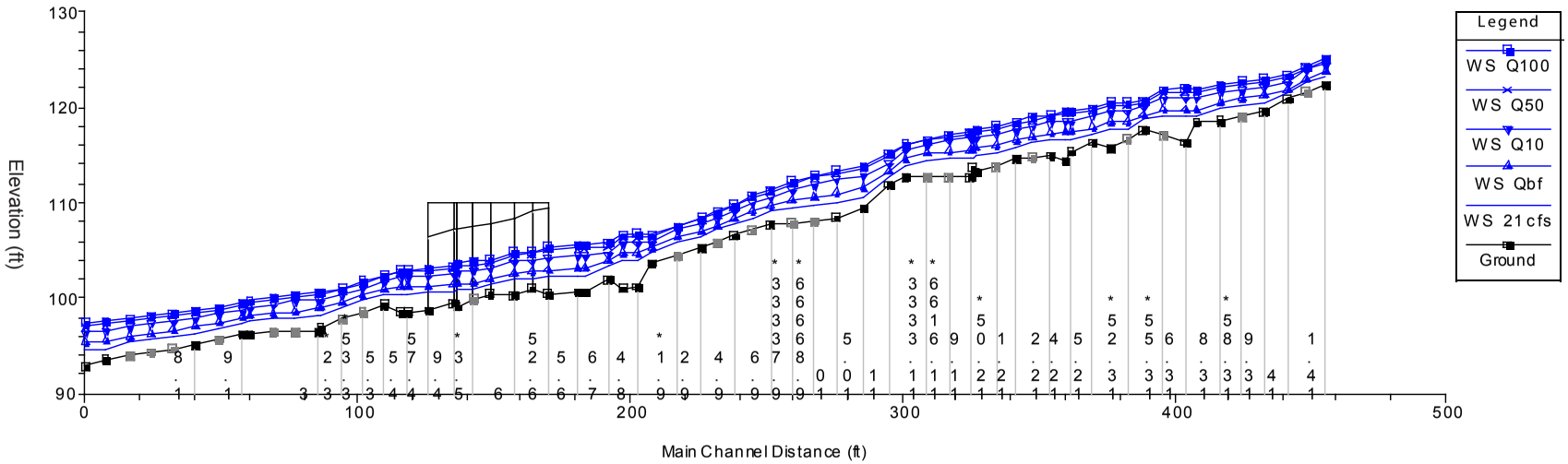

Stations with decimal values are interpolated cross-sections placed along the surveyed profile.

Figure 3—HEC-RAS profile.

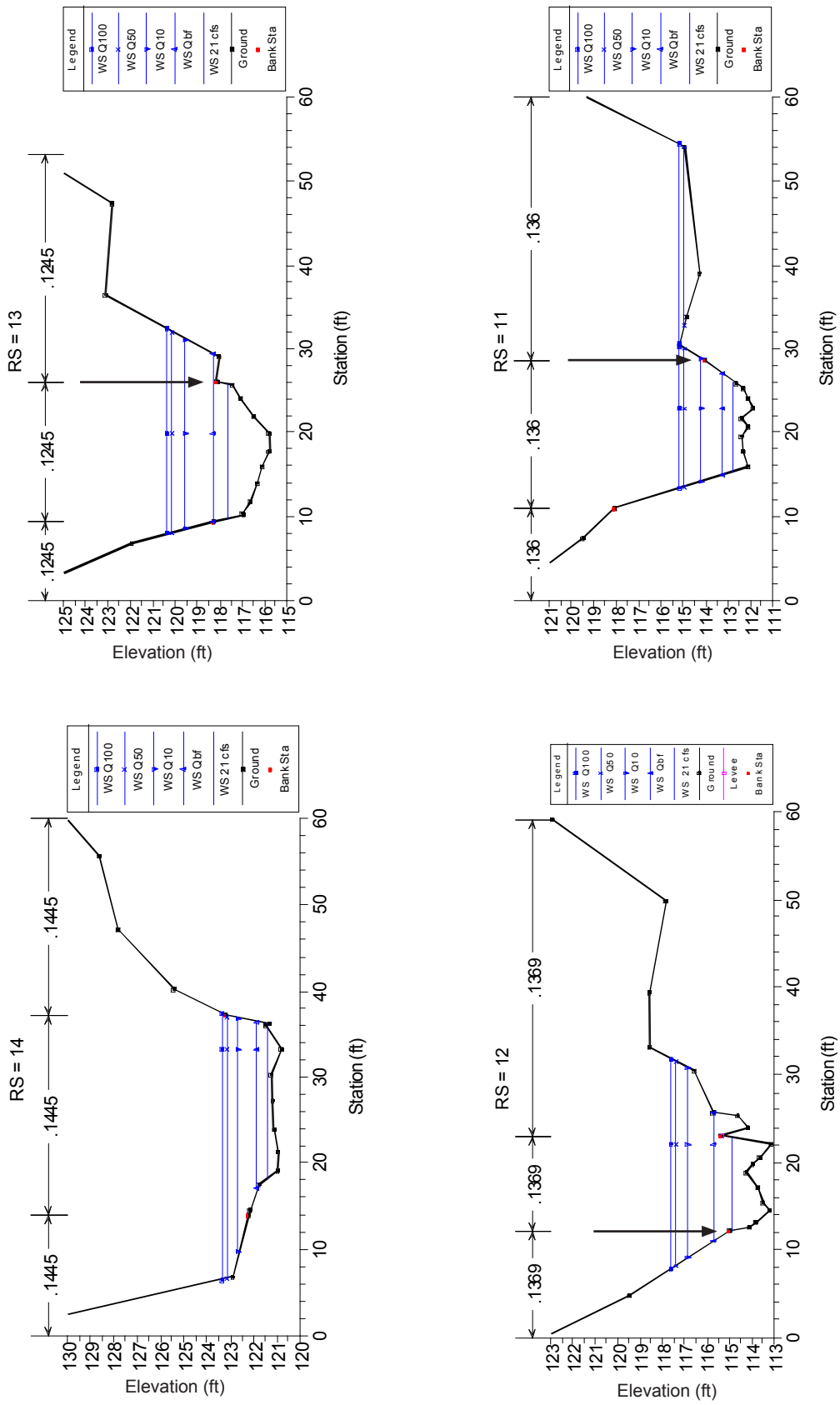

Figure 4—Cross-section plots. Only measured cross sections are included. Manning's n values are included at the top of the cross section. The stationing (RS) corresponds to the stationing on the HEC-RAS profile. Green arrows define the ineffective flow areas. Black arrows represent points identified in the field as the bankfull channel boundary. Only those points identified in the field and supported by hydraulic and topographic analyses are shown below.

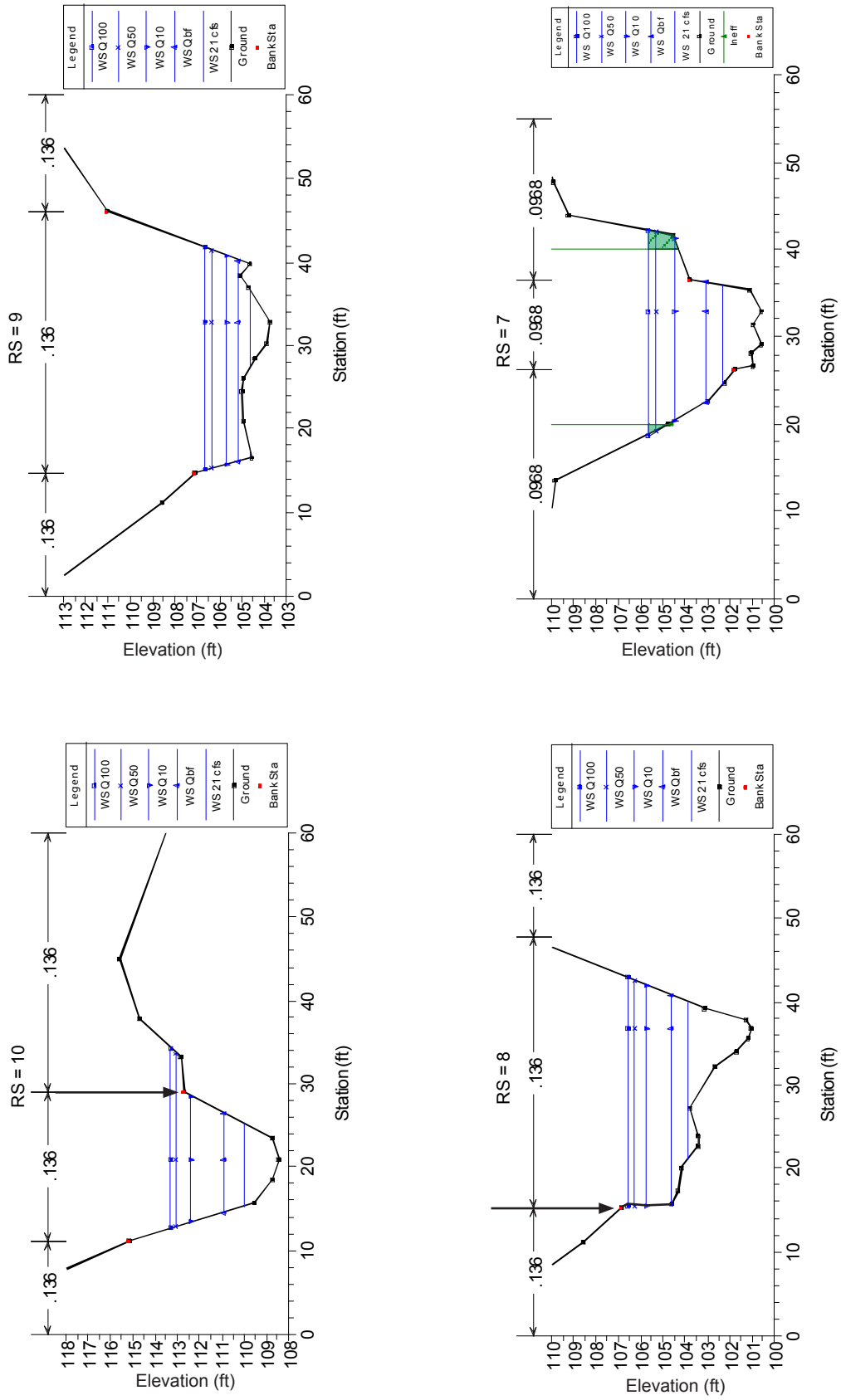

Figure 4—Cross-section plots. Only measured cross sections are included. Manning's n values are included at the top of the cross section. The stationing (RS) corresponds to the stationing on the HEC-RAS profile. Green arrows define the ineffective flow areas. Black arrows represent points identified in the field as the bankfull channel boundary. Only those points identified in the field and supported by hydraulic and topographic analyses are shown below. (continued)

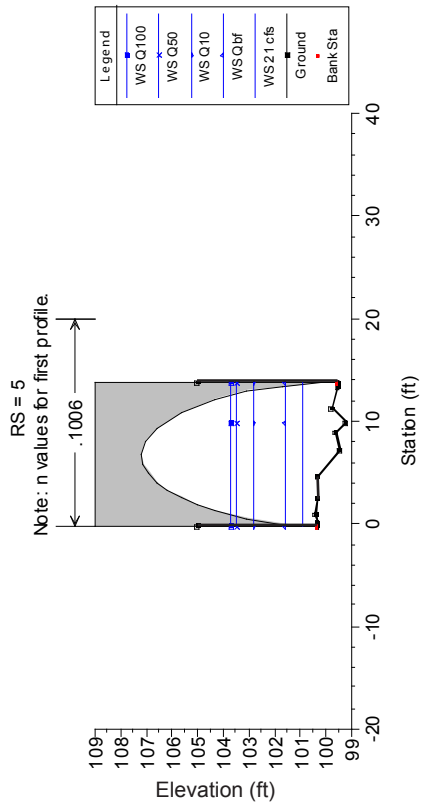

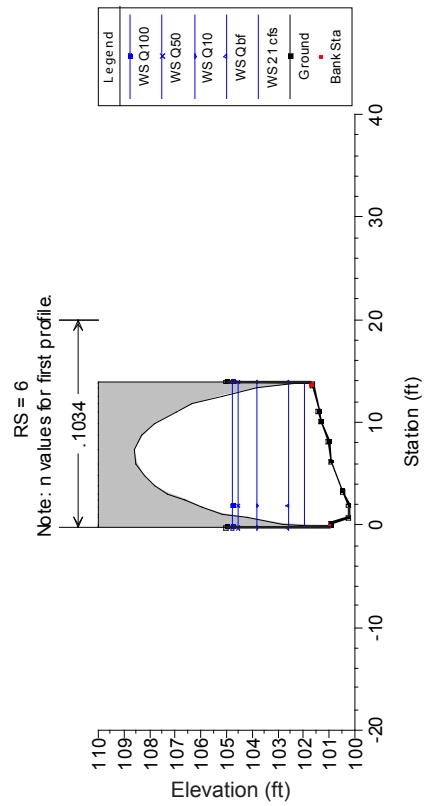

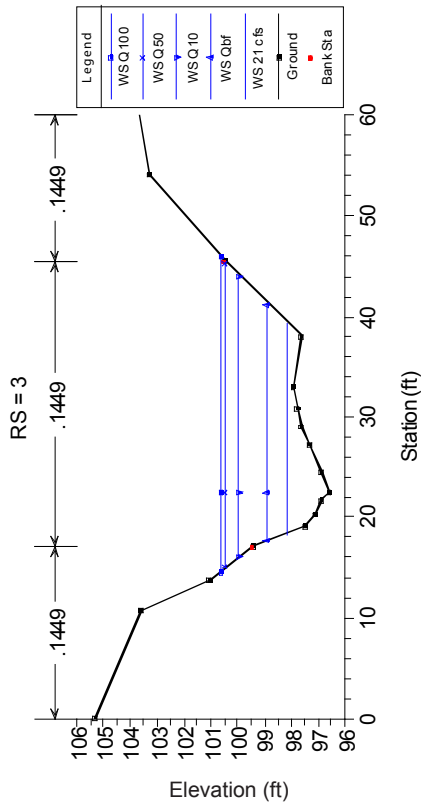

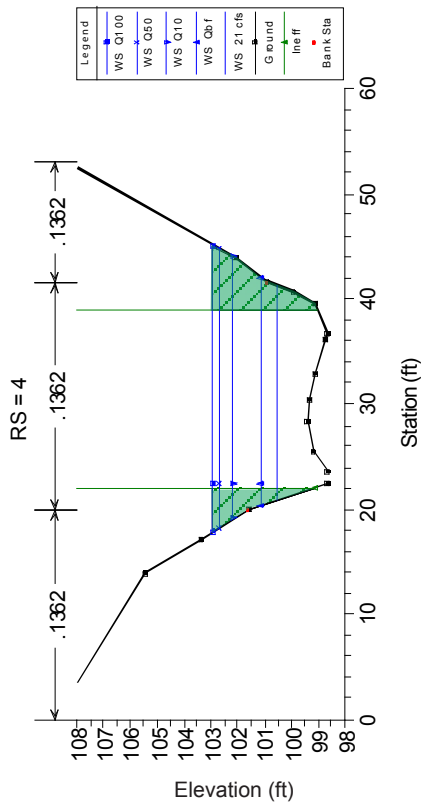

Figure 4—Cross-section plots. Only measured cross sections are included. Manning's n values are included at the top of the cross section. The stationing (RS) corresponds to the stationing on the HEC-RAS profile. Green arrows define the ineffective flow areas. Black arrows represent points identified in the field as the bankfull channel boundary. Only those points identified in the field and supported by hydraulic and topographic analyses are shown below. (continued)

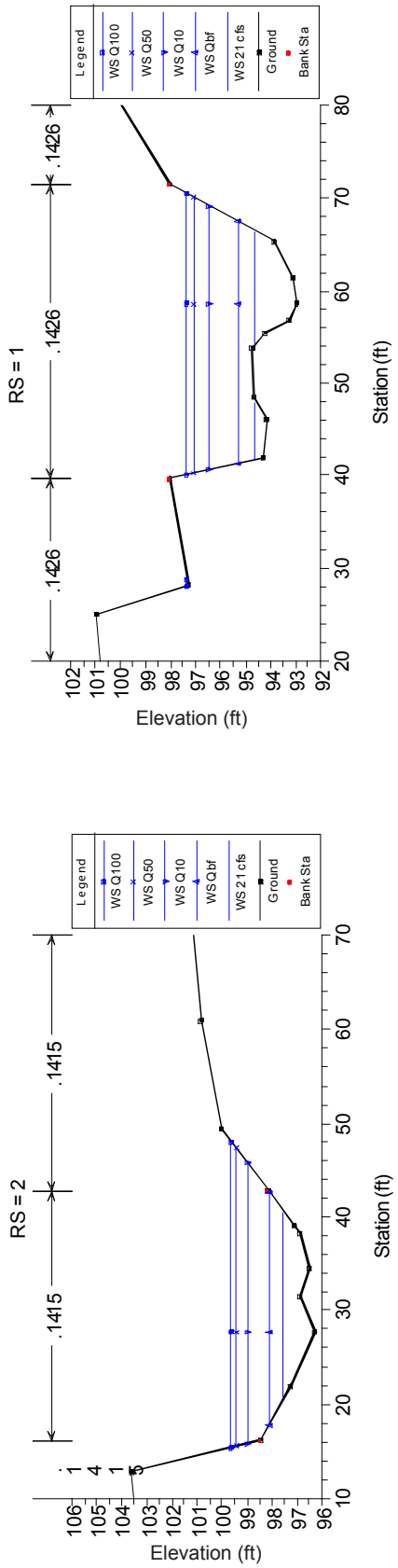

Figure 4—Cross-section plots. Only measured cross sections are included. Manning's n values are included at the top of the cross section. The stationing (RS) corresponds to the stationing on the HEC-RAS profile. Green arrows define the ineffective flow areas. Black arrows represent points identified in the field as the bankfull channel boundary. Only those points identified in the field and supported by hydraulic and topographic analyses are shown below. (continued)

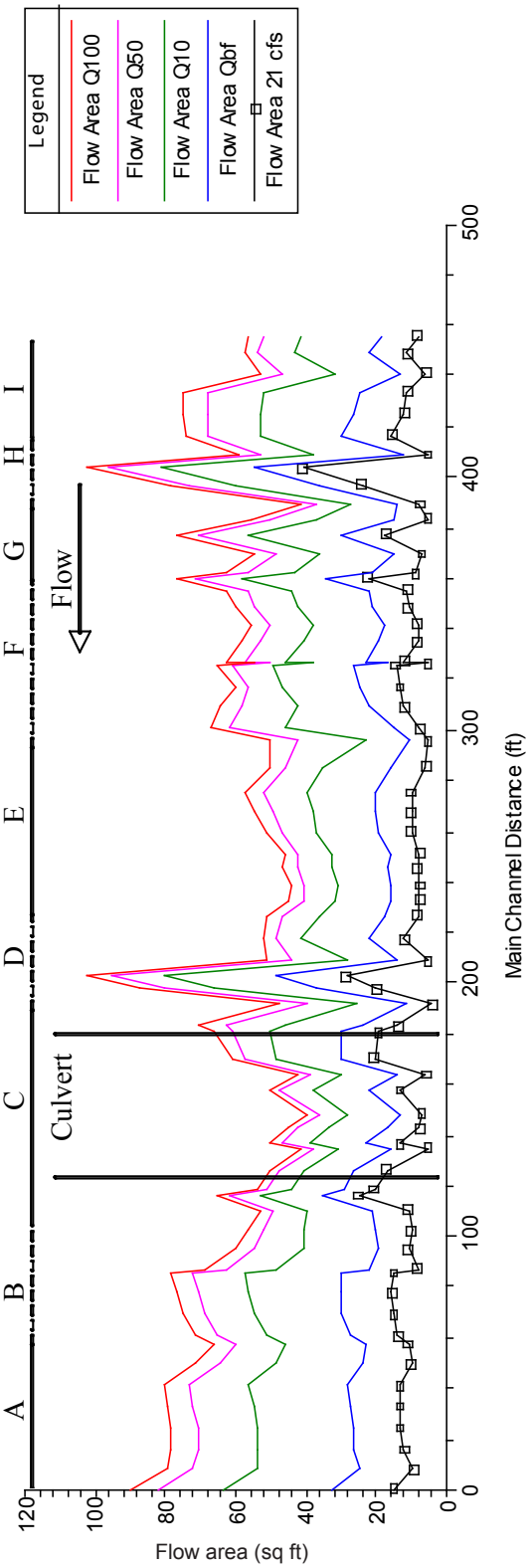

Figure 5—Flow area (total) profile plot.

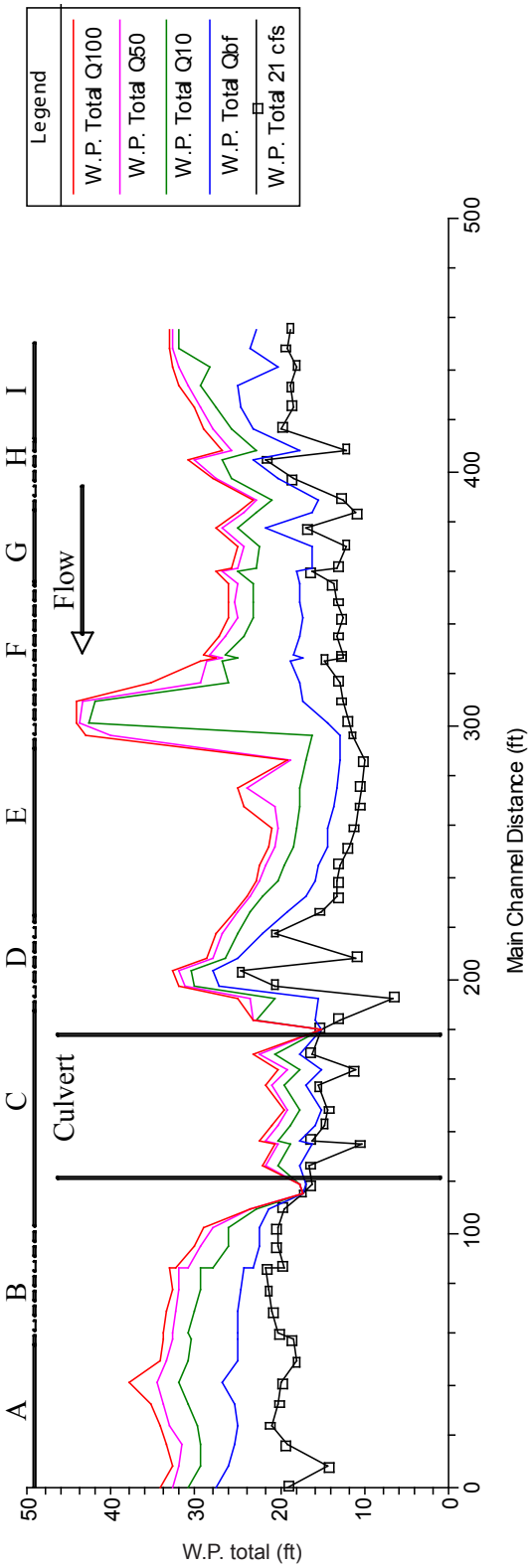

Figure 6—Wetted perimeter.

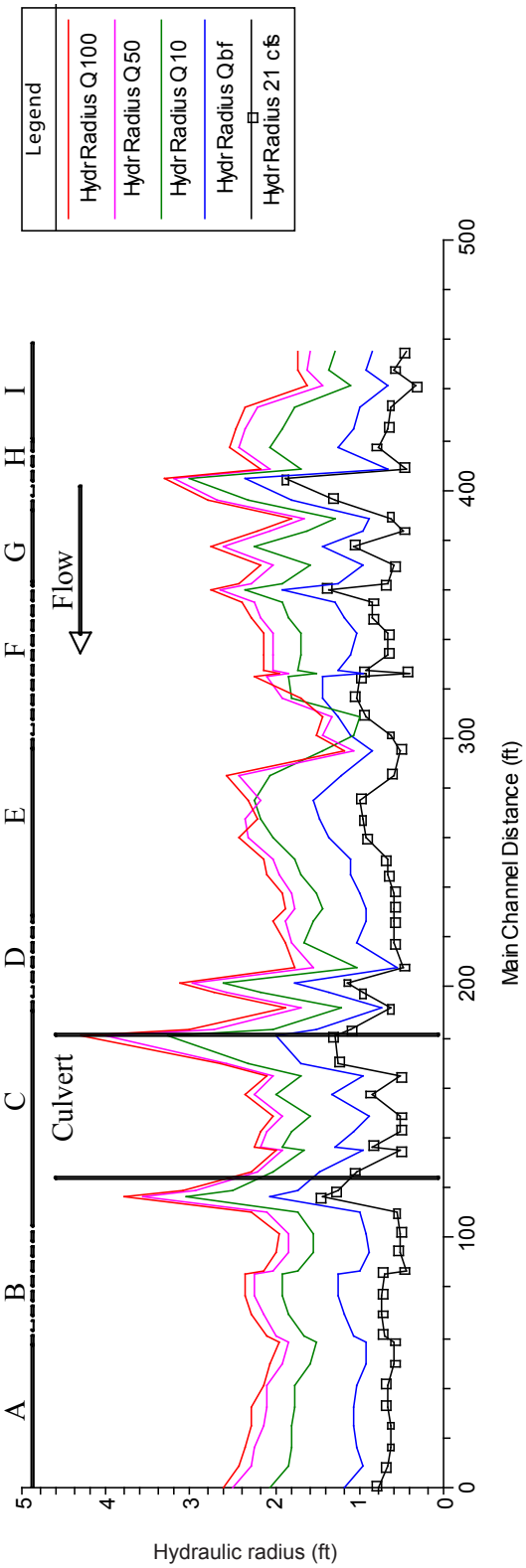

Figure 7—Hydraulic radius.

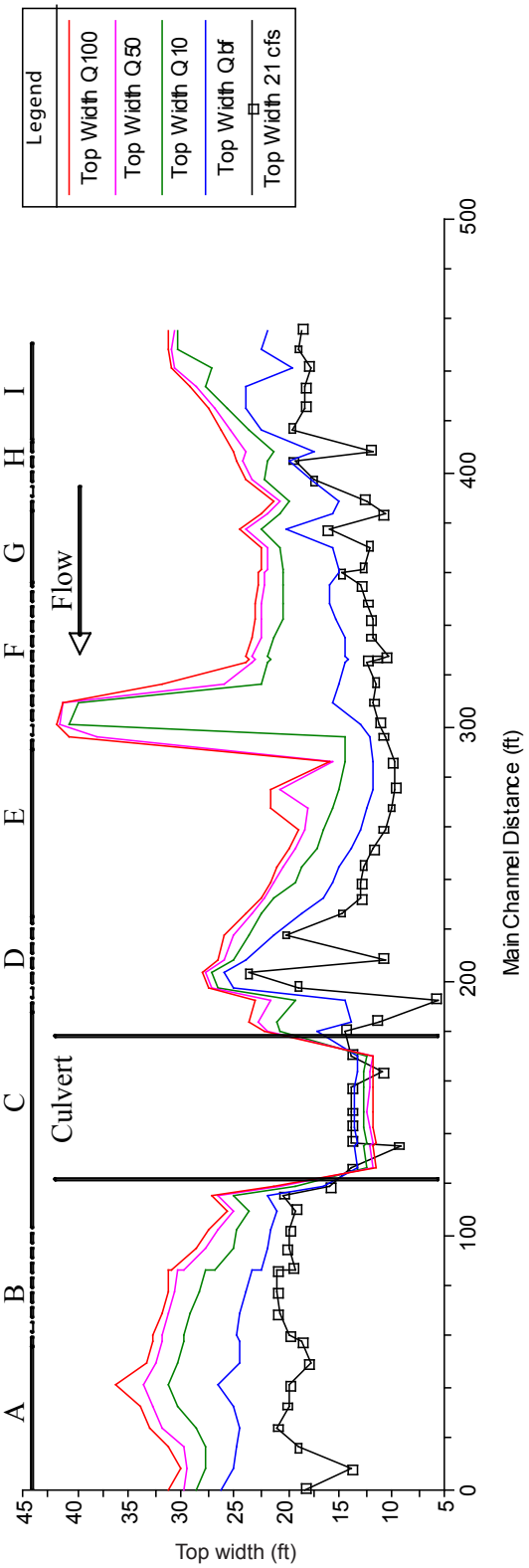

Figure 8—Top width.

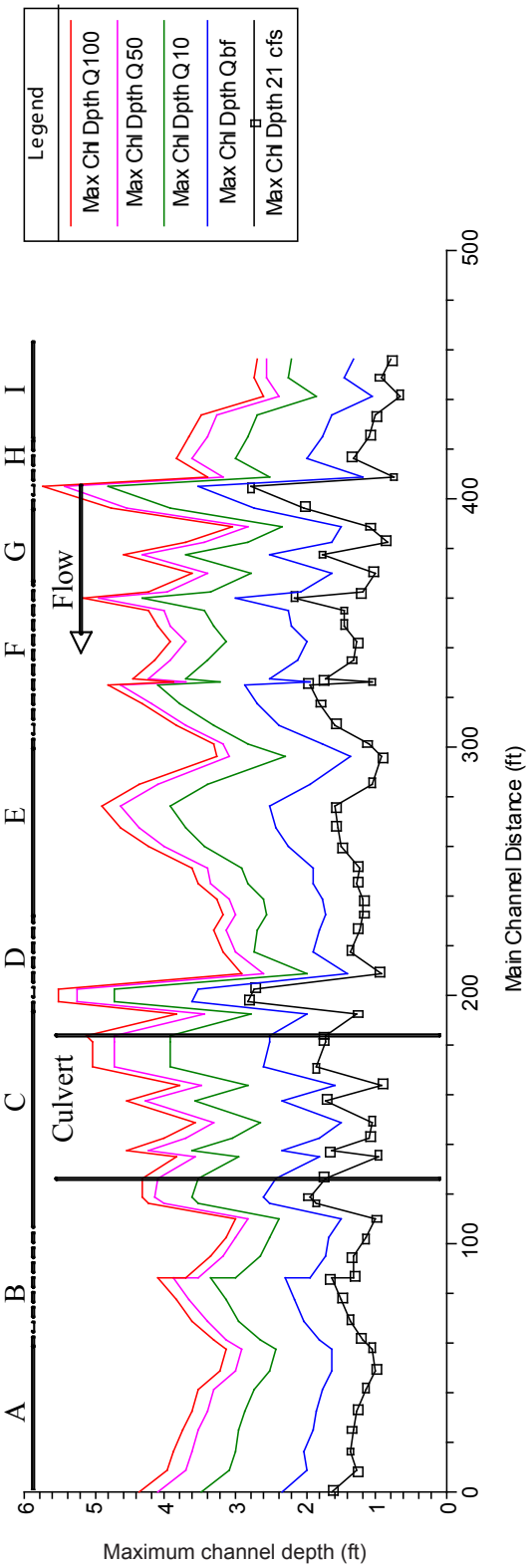

Figure 9—Maximum depth.

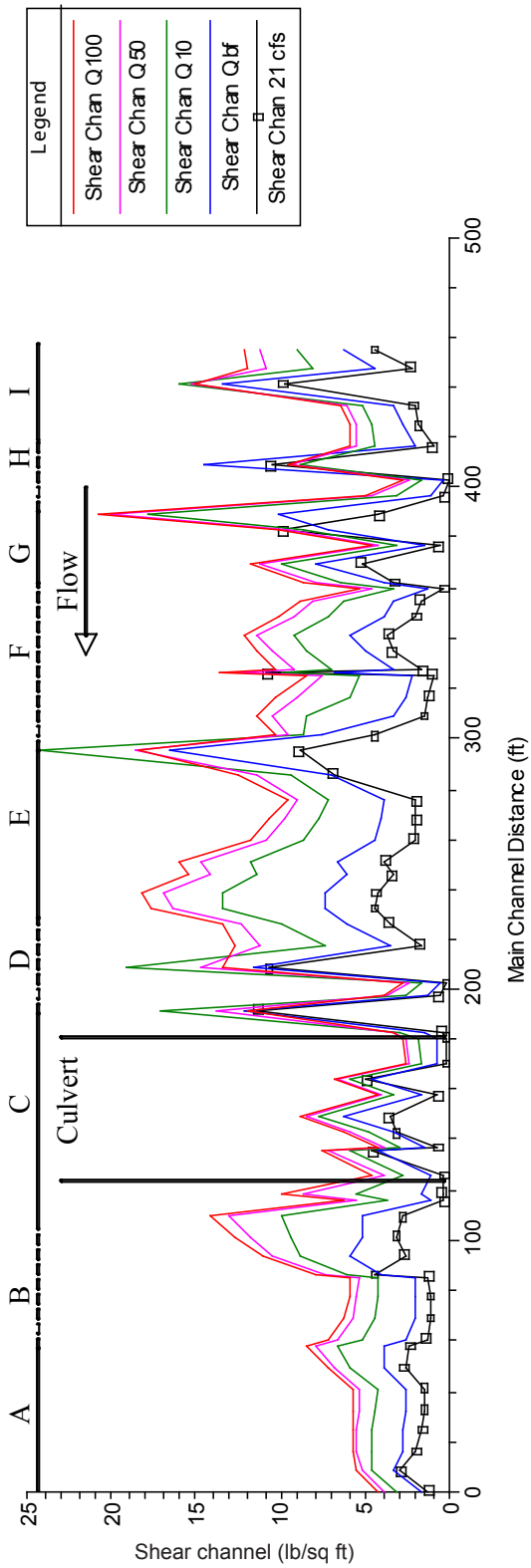

Figure 10—Shear stress (channel) profile.

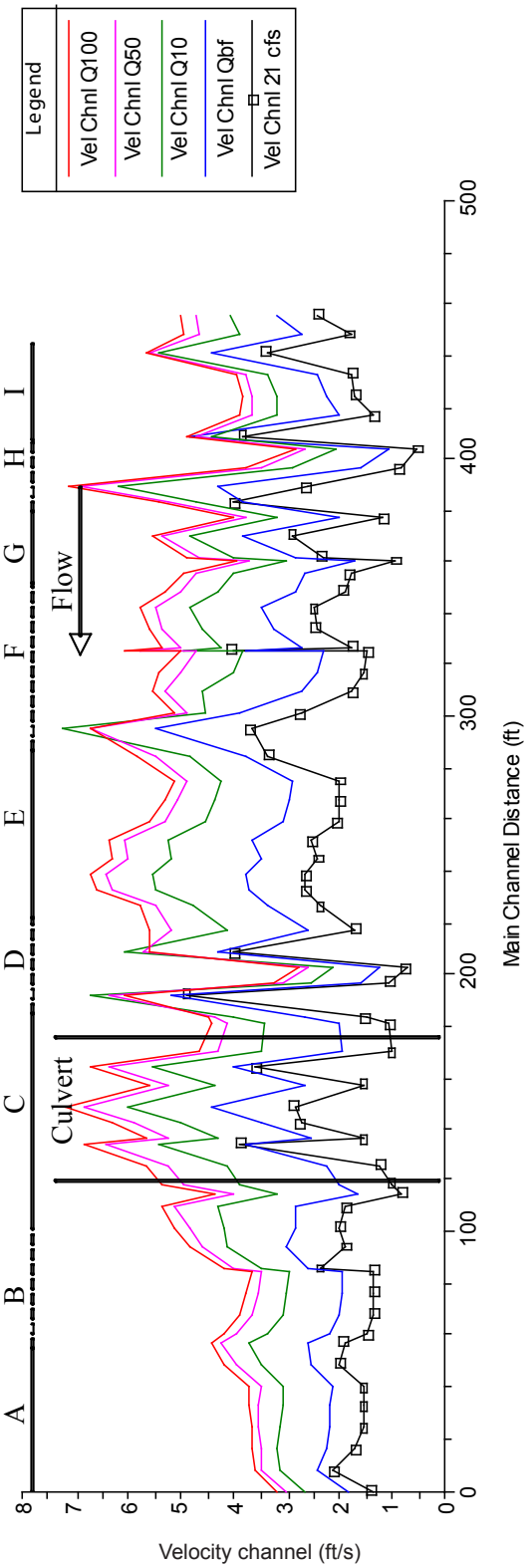

Figure 11—Velocity (channel) profile plot.

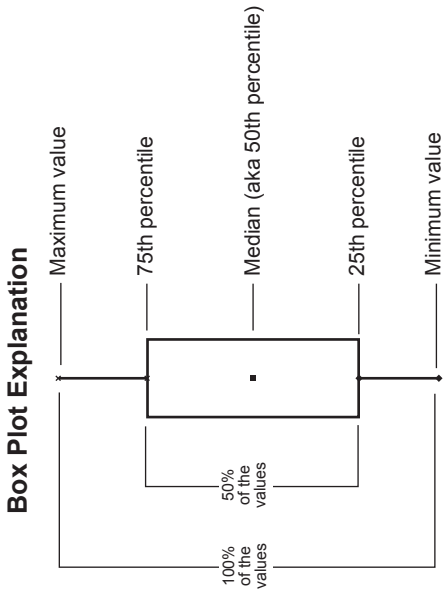

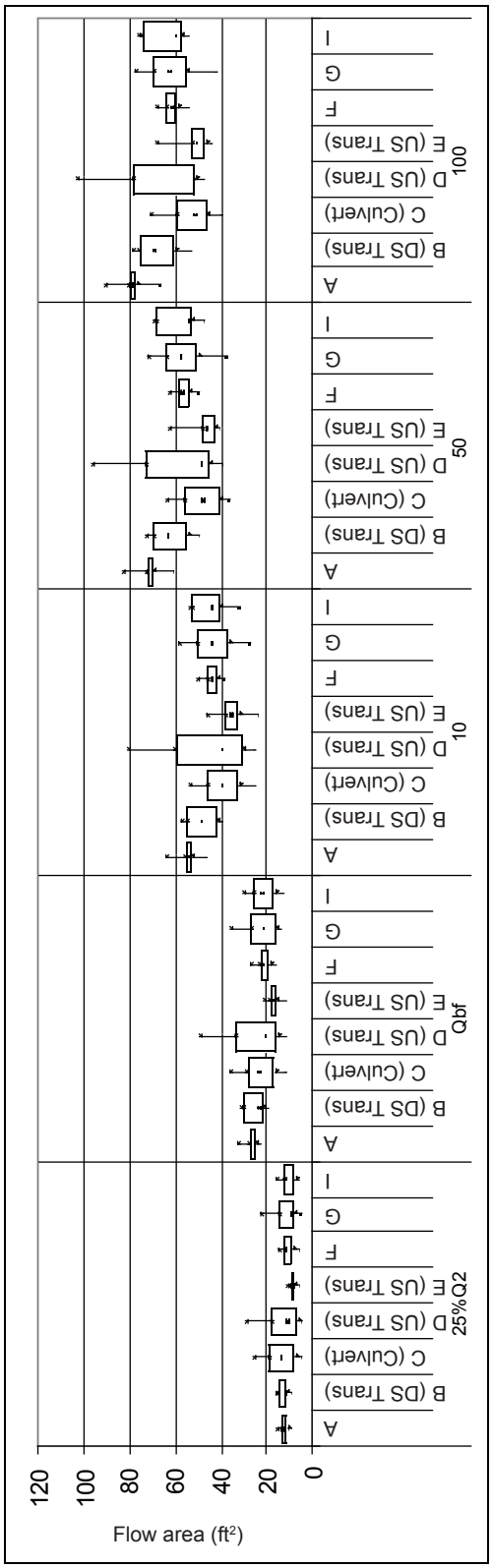

Figure 12—Flow area (total).

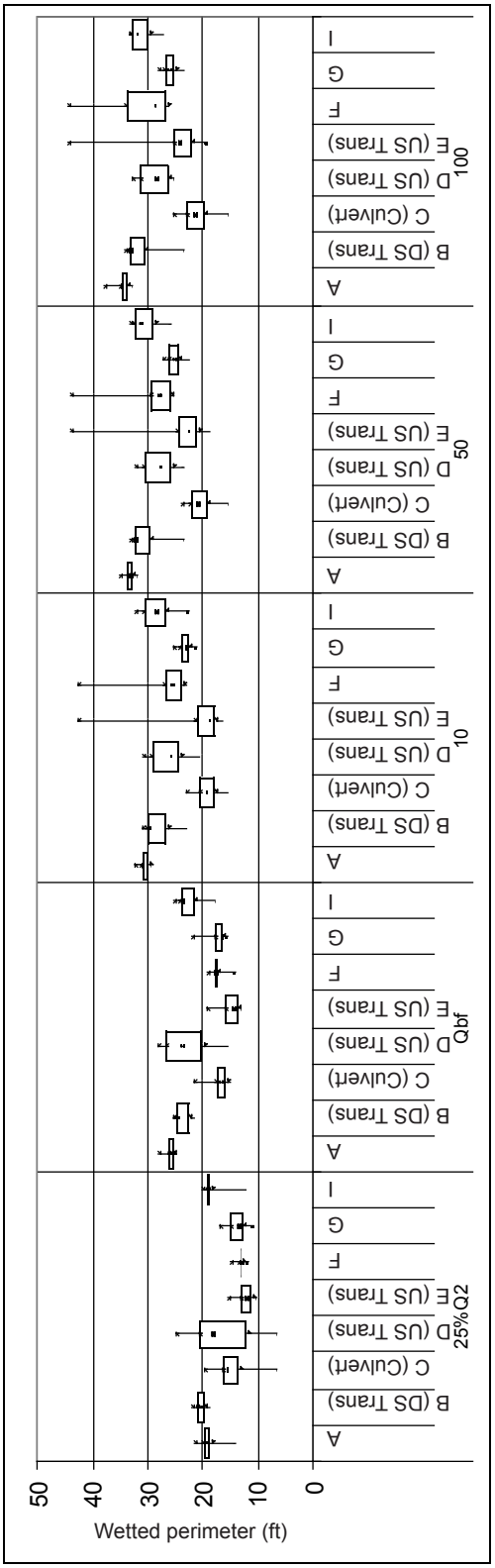

Figure 13—Wetted perimeter.

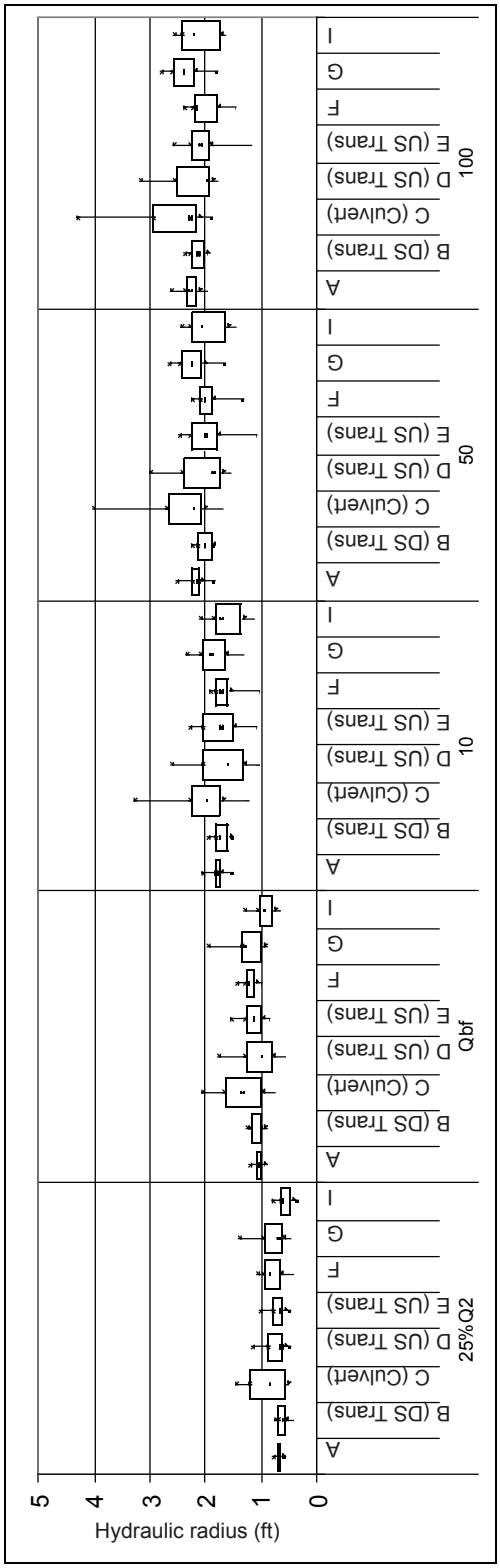

Figure 14—Hydraulic radius.

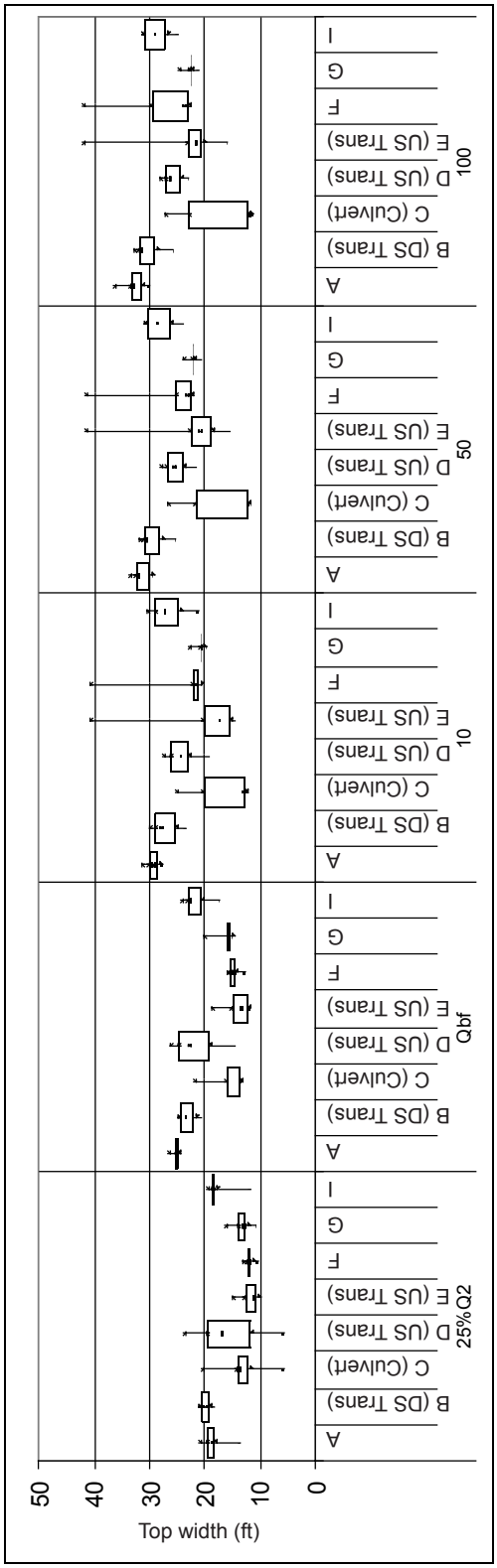

Figure 15—Top width.

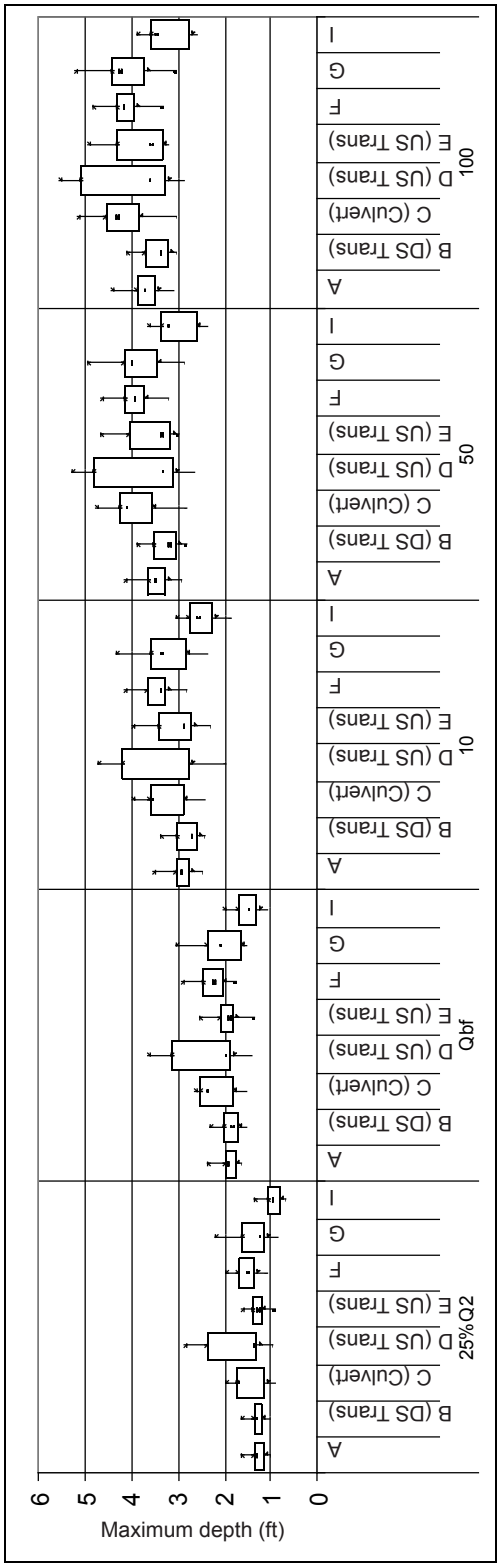

Figure 16—Maximum depth.

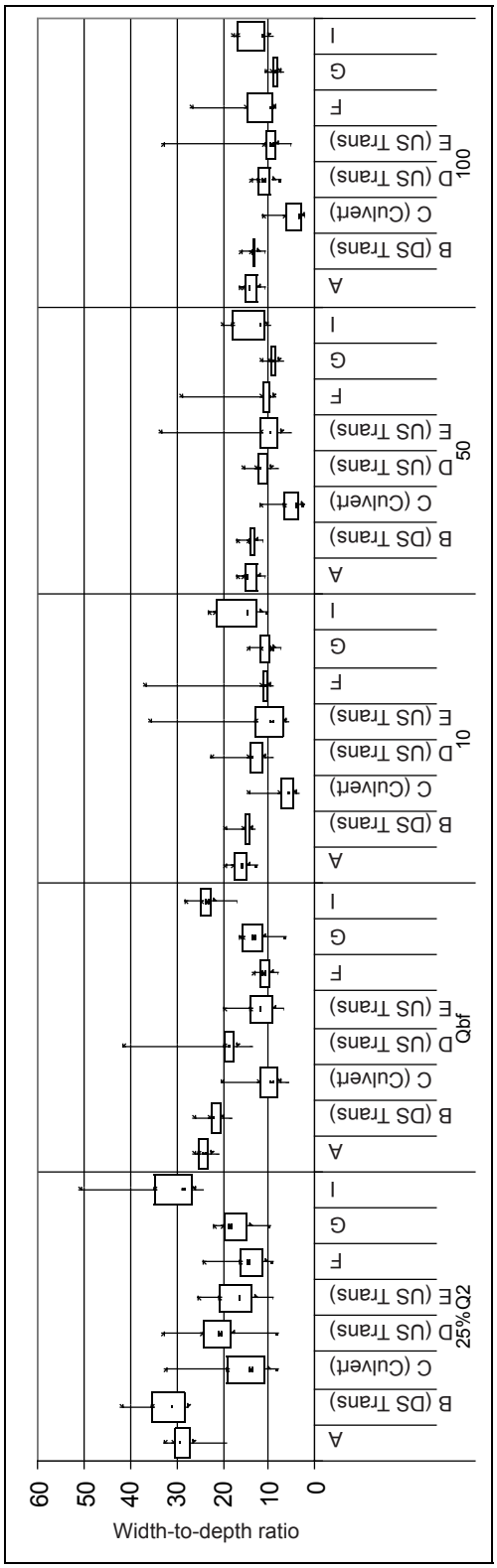

Figure 17—Width-to-depth ratio.

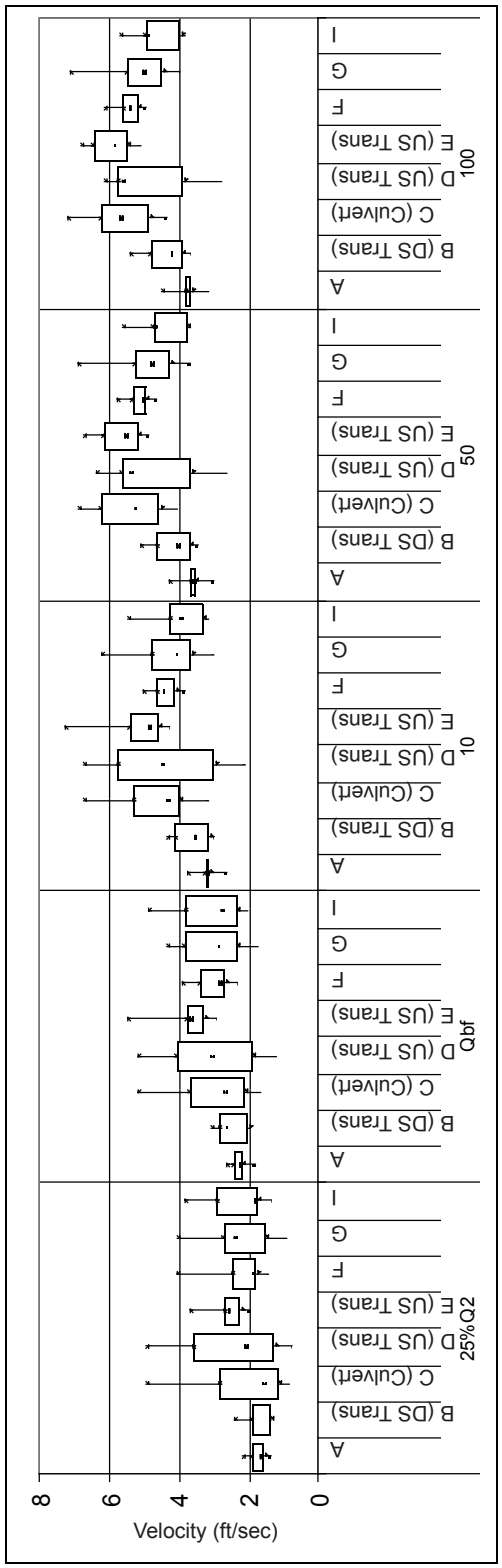

Figure 18—Velocity (channel).

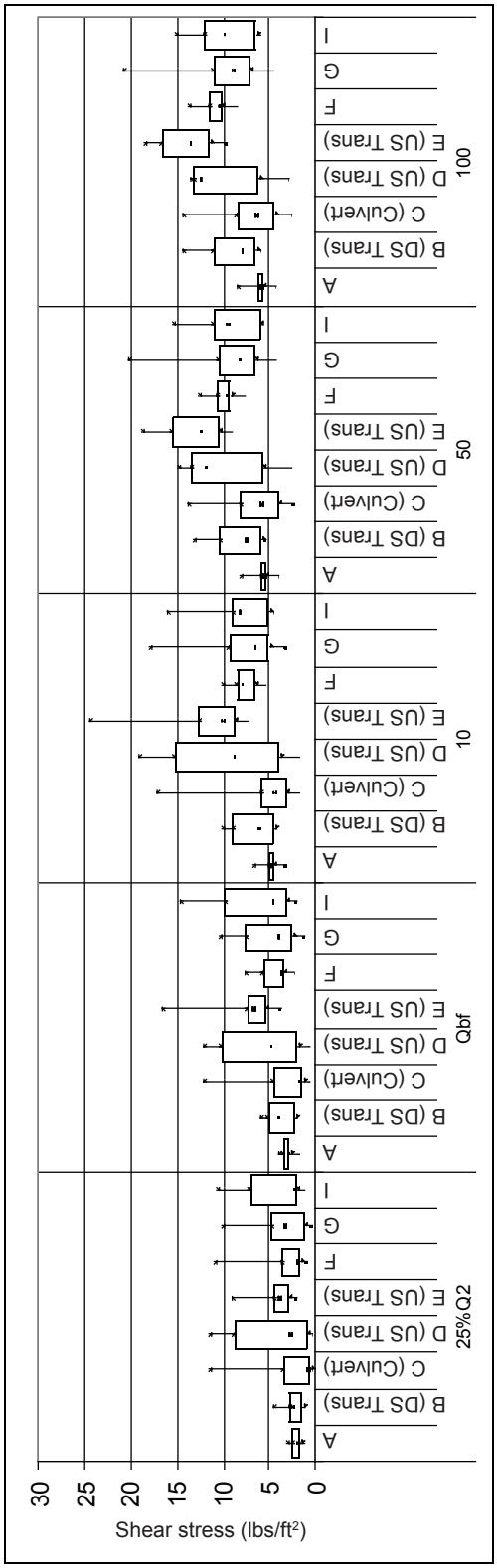

Figure 19—Shear stress (channel).

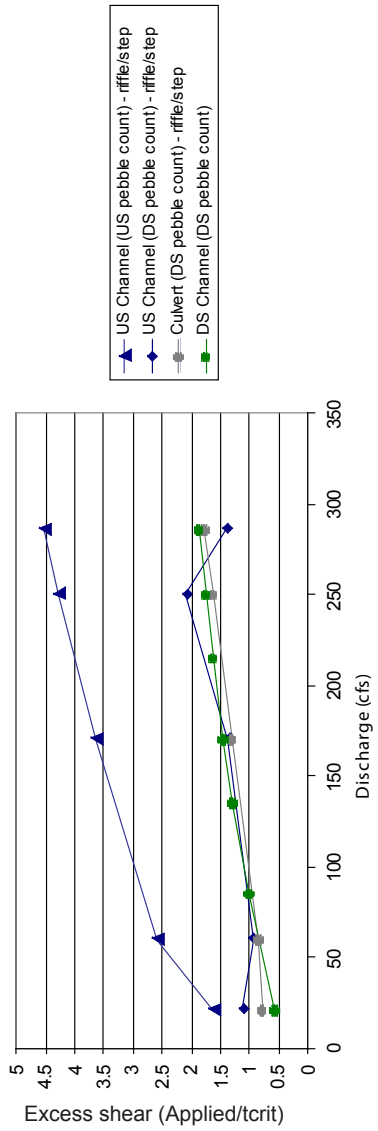

Excess shear stress is the channel shear divided by the critical shear for bed entrainment of the D84 particle size. Values of excess shear greater than 1 indicate bed movement for the D84 particle size.

Figure 20—Excess shear stress.

Table 3—Sum of squared height difference

Reach	XS Location	Unit type	Sum of squared height difference	Within range of channel conditions?
Culvert	US	Pool	0.03	No
	DS	Riffle/step	0.10	Yes
Upstream	US	Riffle/step	0.08	
	DS	Riffle/step	0.12	
Downstream		Riffle	0.06	

Table 4—Vertical Sinuosity

Segment	Location	Vertical Sinuosity (ft/ft)
A	DS channel	1.007
B	DS transition	1.005
C	Culvert	1.005
D	US transition	1.033
E	US transition	1.018
F	US channel	1.008
G	US channel	1.016
H	US channel	1.028
I	US channel	1.006

Table 5—Depth distribution

Reach	XS Location	25% Q_2	Within range of channel conditions?
Culvert	US	6	Yes
	DS	10	No
Upstream	US	2	
	DS	6	
Downstream		7	

Table 6—Habitat unit composition

Reach	Percent of surface area			
	Pool	Glide	Riffle	Step
Culvert	72%	0%	28%	0%
Upstream Channel	29%	0%	39%	2%
Downstream Channel	17%	0%	83%	0%

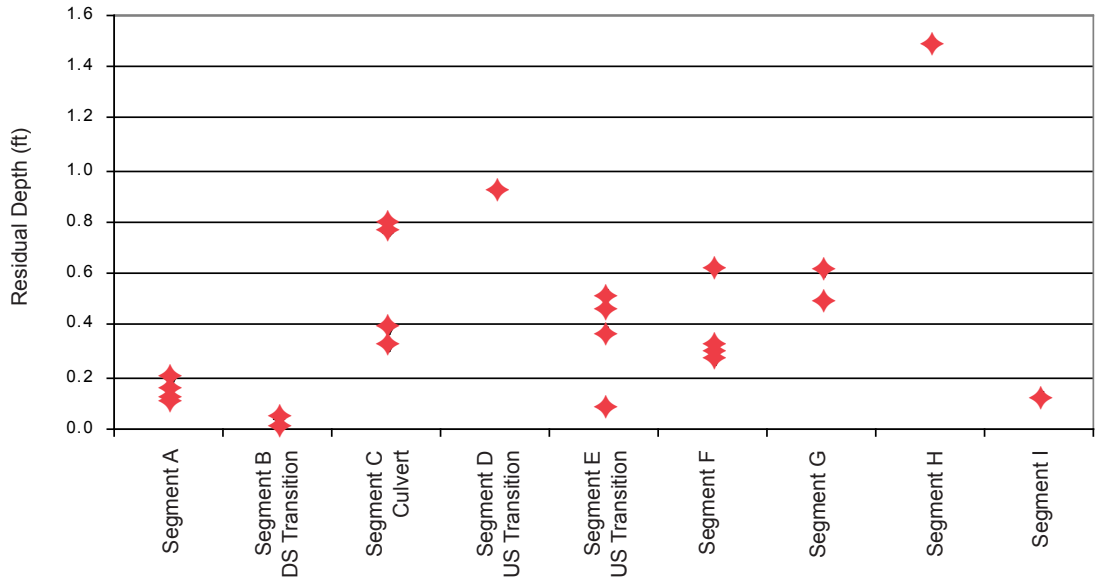

Figure 21—Residual depths.

Table 7—Bed material sorting and skewness

Reach	XS Location	Unit Type	Sorting	Within range of channel conditions?	Skewness	Within range of channel conditions?
Culvert	US	Pool	1.73	No	0.32	Yes
	DS	Riffle/step	1.67	No	0.42	Yes
Upstream	US	Riffle/step	2.10		0.36	
	DS	Riffle/step	1.89		0.44	
Downstream	US	Riffle	1.84		0.24	
	DS	Riffle	2.23		0.51	

Table 8—Large woody debris

Reach	Pieces/Channel Width
Culvert	0
Upstream	1.22
Downstream	2.06

Terminology:

US = Upstream

DS = Downstream

RR = Reference reach

XS = Cross-section

View upstream towards culvert outlet.

View downstream towards culvert inlet.

View upstream from roadway.

View downstream from roadway.

Upstream reference reach.

Upstream reference reach – upstream pebble count, between steps.

Upstream reference reach – downstream pebble count, step.

Downstream reference reach – downstream pebble count (step).

Downstream reference reach – upstream pebble count (riffle).

Downstream reference reach.

View downstream within culvert – pebble counts at flagged locations.

View upstream within culvert – pebble counts at flagged locations.

Cross-Section: Upstream Reference Reach – Upstream Pebble Count

Material	Size Class (mm)	Count	Item %	Cumulative %
sand	<2	3	3%	3%
very fine gravel	2 - 4	7	7%	10%
fine gravel	4 - 5.7	1	1%	11%
fine gravel	5.7 - 8	5	5%	16%
medium gravel	8 - 11.3	3	3%	19%
medium gravel	11.3 - 16	6	6%	26%
coarse gravel	16 - 22.6	1	1%	27%
coarse gravel	22.6 - 32	2	2%	29%
very coarse gravel	32 - 45	5	5%	34%
very coarse gravel	45 - 64	6	6%	40%
small cobble	64 - 90	17	17%	57%
medium cobble	90 - 128	9	9%	66%
large cobble	128 - 180	11	11%	78%
very large cobble	180 - 256	12	12%	90%
small boulder	256 - 362	7	7%	97%
small boulder	362 - 512	3	3%	100%
medium boulder	512 - 1024	0	0%	100%
large boulder	1024 - 2048	0	0%	100%
very large boulder	2048 - 4096	0	0%	100%
bedrock	Bedrock	0	0%	100%

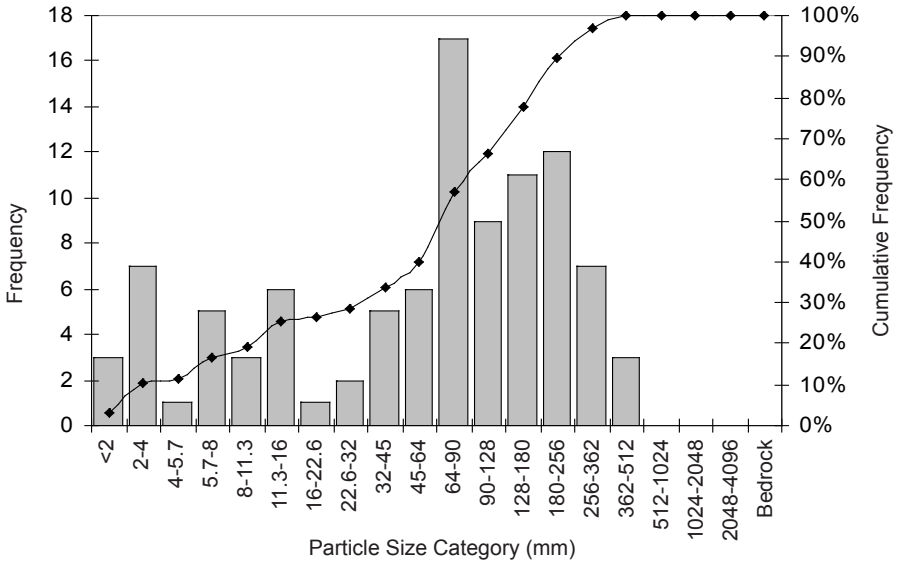

Size Class	Size percent finer than (mm)
D5	4
D16	9
D50	78
D84	205
D95	330
D100	420

Material	Percent Composition
Sand	3%
Gravel	37%
Cobble	50%
Boulder	10%
Bedrock	0%

Sorting Coefficient: 2.10

Skewness Coefficient: 0.36

Cross-Section: Upstream Reference Reach – Downstream Pebble Count

Material	Size Class (mm)	Count	Item %	Cumulative %
sand	<2	2	2%	2%
very fine gravel	2 - 4	2	2%	5%
fine gravel	4 - 5.7	1	1%	6%
fine gravel	5.7 - 8	2	2%	8%
medium gravel	8 - 11.3	0	0%	8%
medium gravel	11.3 - 16	0	0%	8%
coarse gravel	16 - 22.6	1	1%	9%
coarse gravel	22.6 - 32	2	2%	12%
very coarse gravel	32 - 45	3	4%	15%
very coarse gravel	45 - 64	2	2%	18%
small cobble	64 - 90	3	4%	21%
medium cobble	90 - 128	5	6%	27%
large cobble	128 - 180	9	11%	38%
very large cobble	180 - 256	12	14%	52%
small boulder	256 - 362	8	9%	61%
small boulder	362 - 512	18	21%	82%
medium boulder	512 - 1024	15	18%	100%
large boulder	1024 - 2048	0	0%	100%
very large boulder	2048 - 4096	0	0%	100%
bedrock	Bedrock	0	0%	100%

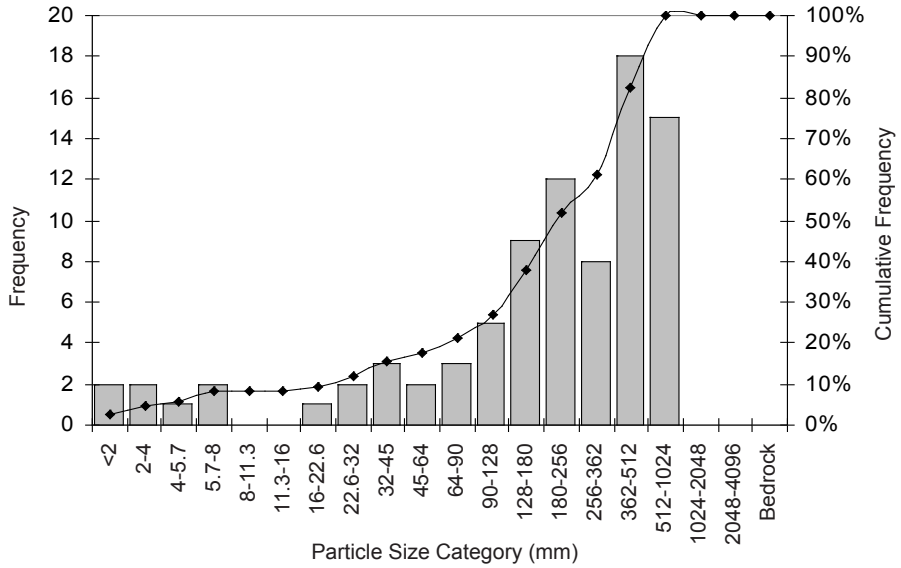

Size Class	Size percent finer than (mm)
D5	5
D16	54
D50	240
D84	520
D95	700
D100	700

Material	Percent Composition
Sand	2%
Gravel	15%
Cobble	34%
Boulder	48%
Bedrock	0%

Sorting Coefficient: 1.89

Skewness Coefficient: 0.44

Cross-Section: Culvert – Upstream Pebble Count

Material	Size Range (mm)	Count	Item %	Cumulative %
sand	<2	2	2%	2%
very fine gravel	2 - 4	3	3%	5%
fine gravel	4 - 5.7	0	0%	5%
fine gravel	5.7 - 8	5	5%	10%
medium gravel	8 - 11.3	5	5%	15%
medium gravel	11.3 - 16	7	7%	21%
coarse gravel	16 - 22.6	7	7%	28%
coarse gravel	22.6 - 32	3	3%	31%
very coarse gravel	32 - 45	11	11%	42%
very coarse gravel	45 - 64	6	6%	48%
small cobble	64 - 90	9	9%	56%
medium cobble	90 - 128	8	8%	64%
large cobble	128 - 180	22	21%	85%
very large cobble	180 - 256	11	11%	96%
small boulder	256 - 362	1	1%	97%
small boulder	362 - 512	3	3%	100%
medium boulder	512 - 1024	0	0%	100%
large boulder	1024 - 2048	0	0%	100%
very large boulder	2048 - 4096	0	0%	100%
bedrock	> 4096	0	0%	100%

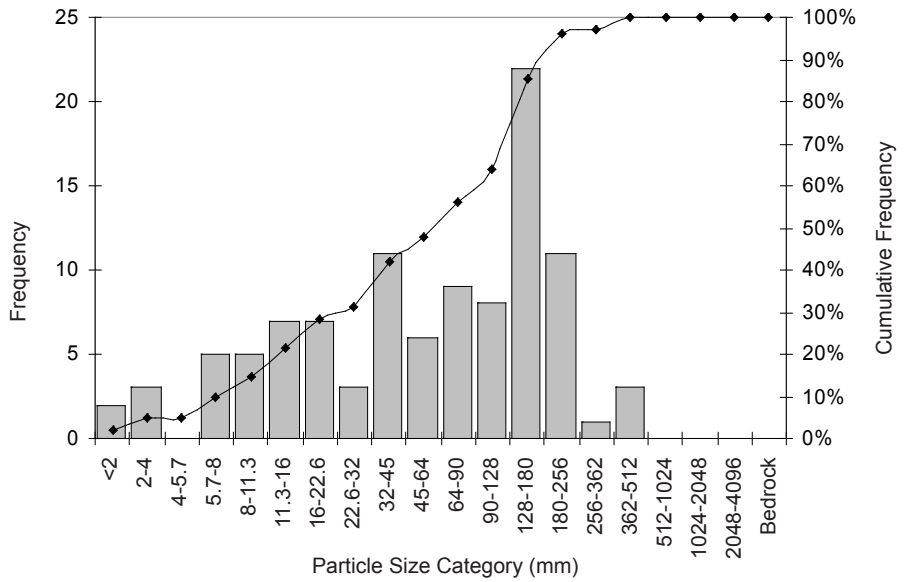

Size Class	Size percent finer than (mm)
D5	6
D16	14
D50	74
D84	180
D95	249
D100	420

Material	Percent Composition
Sand	2%
Gravel	46%
Cobble	49%
Boulder	4%
Bedrock	0%

Sorting Coefficient: 1.73

Skewness Coefficient: 0.32

Cross-Section: Culvert – Downstream Pebble Count

Material	Size Class (mm)	Count	Item %	Cumulative %
sand	<2	0	0%	0%
very fine gravel	2 - 4	1	1%	1%
fine gravel	4 - 5.7	1	1%	2%
fine gravel	5.7 - 8	2	2%	4%
medium gravel	8 - 11.3	1	1%	5%
medium gravel	11.3 - 16	8	7%	12%
coarse gravel	16 - 22.6	3	3%	15%
coarse gravel	22.6 - 32	7	6%	21%
very coarse gravel	32 - 45	4	4%	25%
very coarse gravel	45 - 64	8	7%	32%
small cobble	64 - 90	7	6%	39%
medium cobble	90 - 128	6	6%	44%
large cobble	128 - 180	15	14%	58%
very large cobble	180 - 256	15	14%	72%
small boulder	256 - 362	22	20%	93%
small boulder	362 - 512	6	6%	98%
medium boulder	512 - 1024	2	2%	100%
large boulder	1024 - 2048	0	0%	100%
very large boulder	2048 - 4096	0	0%	100%
bedrock	Bedrock	0	0%	100%

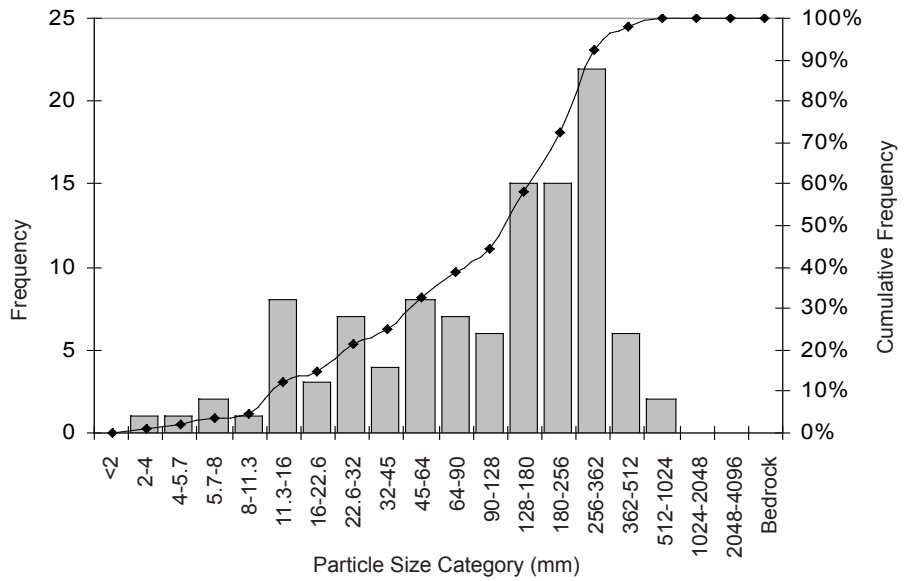

Size Class	Size percent finer than (mm)
D5	12
D16	25
D50	150
D84	309
D95	423
D100	550

Material	Percent Composition
Sand	0%
Gravel	32%
Cobble	40%
Boulder	28%
Bedrock	0%

Sorting Coefficient: 1.67

Skewness Coefficient: 0.42

Cross-Section: Downstream Reference Reach – Upstream Pebble Count

Material	Size Class (mm)	Count	Item %	Cumulative %
sand	<2	3	3%	3%
very fine gravel	2 - 4	1	1%	4%
fine gravel	4 - 5.7	1	1%	5%
fine gravel	5.7 - 8	3	3%	8%
medium gravel	8 - 11.3	2	2%	10%
medium gravel	11.3 - 16	1	1%	11%
coarse gravel	16 - 22.6	4	4%	15%
coarse gravel	22.6 - 32	4	4%	19%
very coarse gravel	32 - 45	4	4%	23%
very coarse gravel	45 - 64	9	9%	31%
small cobble	64 - 90	12	12%	43%
medium cobble	90 - 128	12	12%	55%
large cobble	128 - 180	17	17%	72%
very large cobble	180 - 256	12	12%	83%
small boulder	256 - 362	8	8%	91%
small boulder	362 - 512	3	3%	94%
medium boulder	512 - 1024	6	6%	100%
large boulder	1024 - 2048	0	0%	100%
very large boulder	2048 - 4096	0	0%	100%
bedrock	Bedrock	0	0%	100%

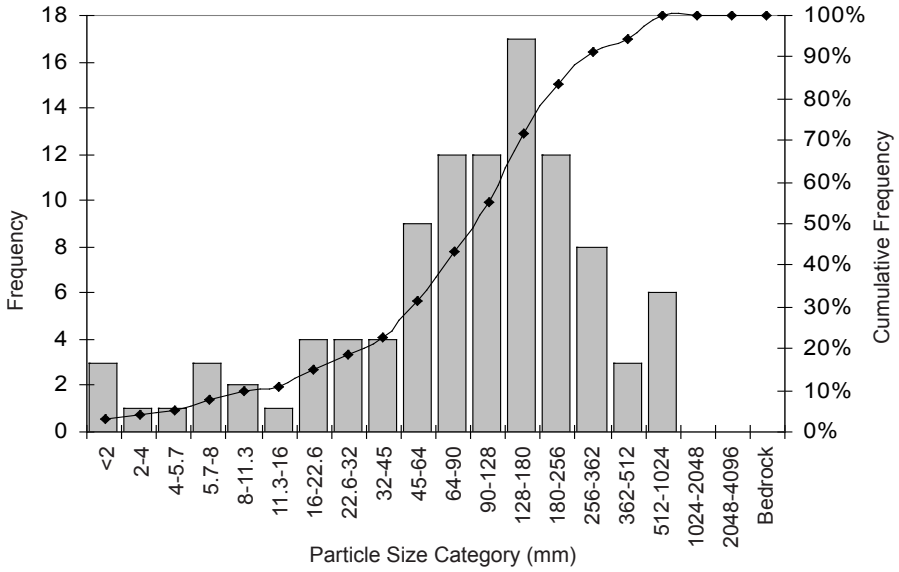

Size Class	Size percent finer than (mm)
D5	6
D16	25
D50	105
D84	267
D95	535
D100	580

Material	Percent Composition
Sand	3%
Gravel	28%
Cobble	52%
Boulder	17%
Bedrock	0%

Sorting Coefficient: 1.84

Skewness Coefficient: 0.24

Cross-Section: Downstream Reference Reach – Downstream Pebble Count

Material	Size Class (mm)	Count	Item %	Cumulative %
sand	<2	7	7%	7%
very fine gravel	2 - 4	1	1%	8%
fine gravel	4 - 5.7	2	2%	9%
fine gravel	5.7 - 8	1	1%	10%
medium gravel	8 - 11.3	1	1%	11%
medium gravel	11.3 - 16	7	7%	18%
coarse gravel	16 - 22.6	5	5%	23%
coarse gravel	22.6 - 32	8	8%	30%
very coarse gravel	32 - 45	1	1%	31%
very coarse gravel	45 - 64	9	8%	40%
small cobble	64 - 90	7	7%	46%
medium cobble	90 - 128	14	13%	59%
large cobble	128 - 180	18	17%	76%
very large cobble	180 - 256	10	9%	86%
small boulder	256 - 362	11	10%	96%
small boulder	362 - 512	4	4%	100%
medium boulder	512 - 1024	0	0%	100%
large boulder	1024 - 2048	0	0%	100%
very large boulder	2048 - 4096	0	0%	100%
bedrock	Bedrock	0	0%	100%

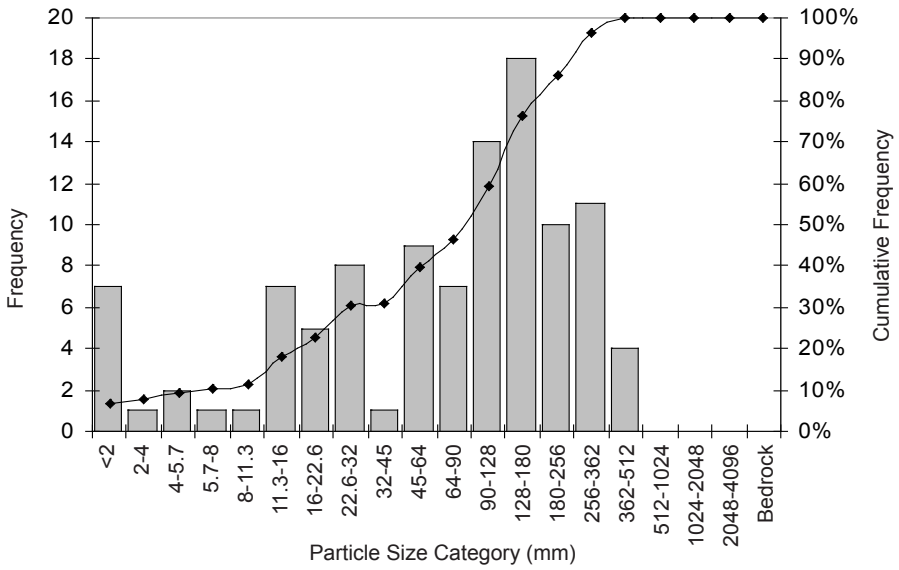

Size Class	Size percent finer than (mm)
D5	1
D16	15
D50	100
D84	220
D95	318
D100	500

Material	Percent Composition
Sand	7%
Gravel	33%
Cobble	46%
Boulder	14%
Bedrock	0%

Sorting Coefficient: 2.23

Skewness Coefficient: 0.51