SIMPSON CREEK

Site Information

Site Location: Willamette NF, Forest Rd 21 MP 21.1

Year Installed: 1995

Lat/Long: 122°23'48.74"W 43°29'48.24"N

Watershed Area (mi²): 11.3

Stream Slope (ft/ft)[1]: 0.0516

Channel Type: Step-pool

Bankfull Width (ft): 25

Survey Date: March 22, 2007

[1]Water surface slope extending up to 20 channel widths up and downstream of crossing.

Culvert Information

Culvert Type: Open-bottom arch

Culvert Material: Annular CMP

Culvert Width: 22

Outlet Type: Mitered

Culvert Length: 114

Inlet Type: Mitered

Pipe Slope (structure slope): 0.083

Culvert Bed Slope: 0.044

(First hydraulic control upstream of inlet to first hydraulic control downstream of outlet.)

Culvert width as a percentage of bankfull width: 0.89

Alignment Conditions: Online with natural channel.

Bedform Conditions: Coarse material forming many continuous steps in culvert.

Pipe Condition: Good condition. Little to no rust or open joints. No footing scour.

Hydrology

Discharge (cfs) for indicated recurrence interval

25% 2-yr	2-year	Q_{bf}[2]	5-year	10-year	50-year	100-year
65	258	330	407	511	751	858

[2]Bankfull flow estimated by matching modeled water surface elevations to field-identified bankfull elevations.

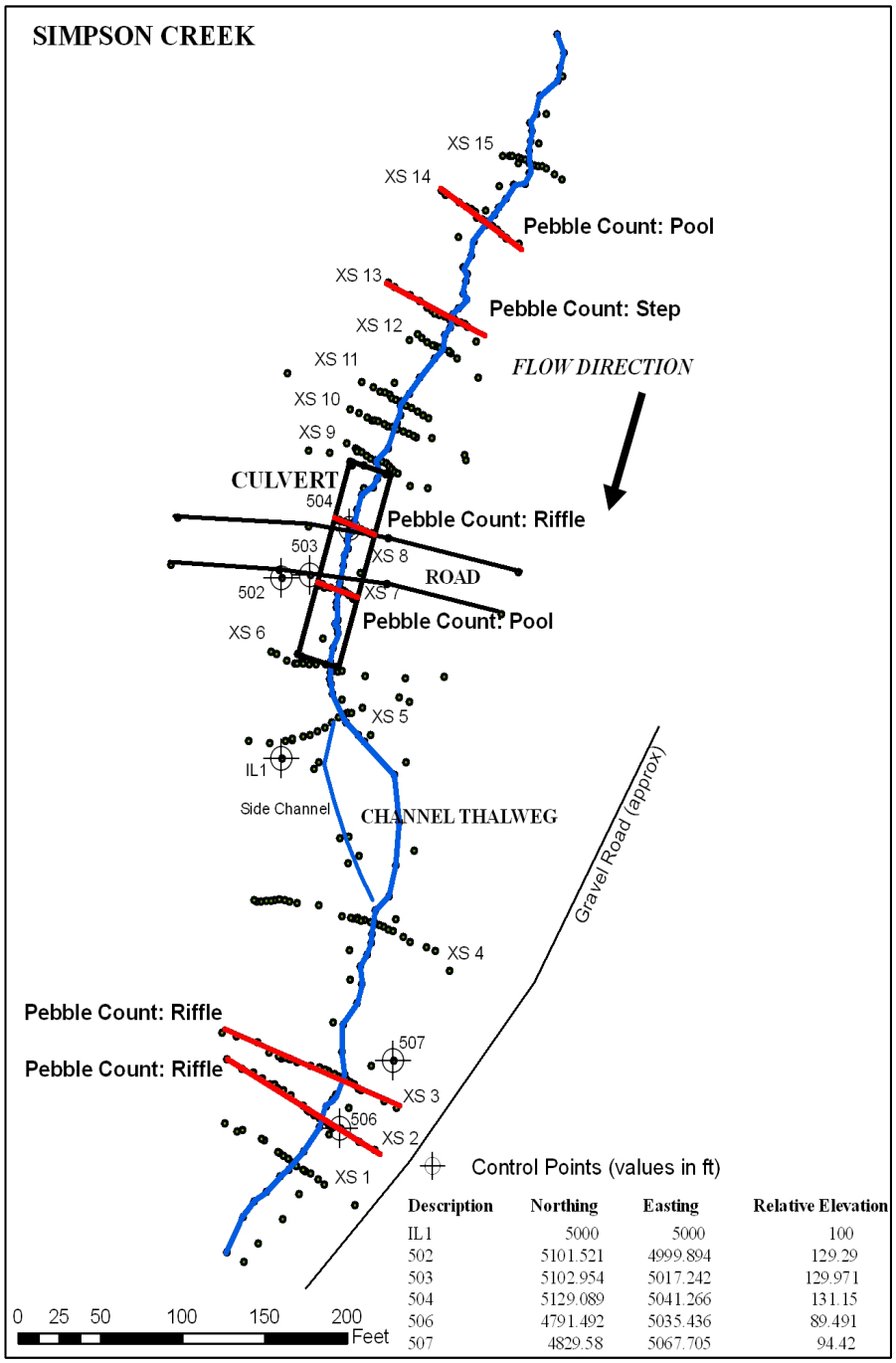

Description	Northing	Easting	Relative Elevation
IL1	5000	5000	100
502	5101.521	4999.894	129.29
503	5102.954	5017.242	129.971
504	5129.089	5041.266	131.15
506	4791.492	5035.436	89.491
507	4829.58	5067.705	94.42

Points represent survey points

Figure 1—Plan view map.

HISTORY

The Simpson Creek culvert was installed in 1995. The previously installed culvert had a 14-foot diameter, a 3- to 4-foot perch and a sediment wedge was apparent at the culvert inlet (Kim Johansen, personal communication). According to the designer (Kim Johansen), class VII riprap was specified, which would have had the largest particles 1.6 feet in diameter. Local pit material was actually placed in the culvert, which contained a more well-graded but fine-lean mix. This included up to 24-inch-diameter boulders. It also included 3.5- to 4.5-foot "fish rest stop rocks" placed at 16-foot intervals in two rows 11 feet apart centered in the structure and offset by 8 feet from one another. There was 12 inches of screened aggregate approximately 2-inch to 1/2-inch was placed on top of the constructed bed. The spread footing is 5 feet deep and 5 feet wide. There was a 7-foot-deep scour pool below the old culvert. The downstream scour pool was filled placing a group of 3- to 5-foot-diameter boulders in the bottom, then pulling tailout material into the hole to restore a long profile. The channel exhibited at least two major historic channels downstream within the delta area downstream of the culvert. The culvert experienced the February 1996 flood, which was estimated to be a 100-year flood on Simpson Creek. The flood resulted in upstream channel incision and deposition in the culvert.

The above information was provided by Kim Johansen.

SITE DESCRIPTION

The upstream channel consists of a high gradient step-pool channel with a low but narrow active flood-plain surface. The channel sits in a confined and narrow valley and at times abuts the valley walls. Boulder steps are interspersed by turbulent plunge pools. Downed trees stretched across the channel while some in-channel wood forms jams along the edges. The upstream channel flattens as it enters the culvert. There appears to be some material that has deposited upstream of the inlet, which is followed by a large drop and a plunge pool at the inlet. Evidence of channel incision upstream of the culvert can be observed along both banks, but is most apparent on the actively eroding left bank.

The Simpson Creek culvert is a bottomless arch that is mitered to conform to the roadfill. The channel through the crossing consists of a series of steep riffles and steps interspersed by turbulent plunge pools. Assuming the culvert and culvert bed were originally installed on the same grade, there has been bed adjustment within the pipe consisting of incision in the upstream portion and/or aggradation in the downstream portion.

Downstream of the culvert, the channel remains relatively flat, opening to a braided reach. An abandoned channel runs along the right valley wall. The channel splits at an island below the culvert. Below the island, gradient picks up and the reach consists of steep riffles and steps interspersed with turbulent plunge pools. The substrate here is finer than in the culvert and in the channel upstream of the culvert, and is comprised of large cobbles and small-to-medium boulders. A more extensive and well-defined flood plain exists in the downstream reach compared to the upstream reach. This is largely a depositional area as the Simpson Creek valley transitions into the broad valley of the mainstem Middle Fork Willamette. Small wood pieces have accumulated along the margins of the stream. A gravel road runs along the left bank.

SURVEY SUMMARY

Fifteen cross sections and a longitudinal profile were surveyed along Simpson Creek in March 2007 to characterize the culvert, the upstream channel, and the downstream channel. Four cross sections were measured upstream of the culvert to characterize the upstream channel. Four cross sections were measured downstream of the culvert to characterize the channel downstream of the crossing. In the culvert, cross sections were taken through a step and

between steps. Two additional cross sections were surveyed downstream of the culvert to characterize the outlet and the expansion of flow. Another cross section was surveyed upstream to characterize the inlet and the contraction of flow. Six pebble counts were taken at cross-section locations. The cross-section locations and pebble-count locations are depicted on the map (figure 1)

PROFILE ANALYSIS SEGMENT SUMMARY

The profile analysis resulted in 10 profile segments (figure 2). The culvert consisted of one profile segment (F). The culvert segment matched the gradient of a representative segment in the upstream channel (H), which is affected by channel incision; interpretations of results take this into account. Another representative segment in the upstream channel (J) had a gradient difference of 35 percent, but was included as a potential comparison segment due to similarities in bed morphology (closely spaced step-pool sequences) (table 1).

The inlet transition segment (G) has comparable gradient to two downstream channel segments (A and C) and one upstream segment (J). The outlet transition segment has comparable gradient to segment H, with the same caveats mentioned above.

Segment comparisons must consider that throughout this reach is a geomorphic transition from the narrow Simpson Creek valley into the broad Middle Fork Willamette River valley. This transition is characterized by a downstream widening of the valley and a concave longitudinal profile shape. Geomorphic influences, such as gradient and valley width that change throughout this reach are taken into consideration when interpreting comparisons between segments.

SCOUR CONDITIONS

Observed conditions

Footing scour – There was no observed scour undermining footings or threatening structure integrity.

Culvert-bed adjustment – Assuming that the culvert structure and culvert bed were originally constructed at the same gradient, the culvert-bed profile has flattened since construction. This flattening appears to be mostly due to aggradation within the downstream portion of the culvert, with potentially some inlet scour within the upstream portion of the culvert. Approximately 100 cubic yards were estimated to have been entrained during the 1996 flood, depositing downstream of the culvert into the mainstem Middle Fork Willamette River and extending upstream to aggrade the entire culvert bed and about 30 feet of upstream channel. Since then, the upstream extent of deposits has moved downstream to the midpoint of the culvert. Inlet contraction during other smaller flood events has maintained transport of material through the inlet region (Kim Johansen, personal communication).

Profile characteristics – The profile has a concave shape through the crossing (figure 2). This shape reflects channel incision in the upstream channel and scour at the inlet region, combined with aggradation in the downstream portion of the culvert and in the channel downstream of the culvert. Incision in the upstream channel potentially resulted from a headcut propagating upstream from inlet scour. In the absence of the culvert, natural concavity of the profile would be expected based on the geomorphic valley transition through this reach. The adjustments observed at this site may reflect the tendency towards this concave profile condition.

Residual depths – Culvert residual depths ranged from 0.11 feet to 1.17 feet and were within the range of the comparable slope segment J (figure 21). The upstream transition segment was also within the range of comparable slope segments. Residual depth in the downstream transition segment was within a few inches of that found in the comparable slope segment H. These results suggest no significant local scouring at the channel-unit scale beyond what is found in the channel outside of the crossing.

Substrate – Culvert bed material distributions are similar to segments in the channel outside of the crossing. Culvert substrate is slightly coarser than channel pebble counts, reflecting large rocks placed in the culvert during construction. Culvert substrate generally has less material in the fine size classes. Pebble counts are provided at the end of this summary.

Predicted conditions

Cross-section characteristics – Cross-section characteristics appear to be affected by the culvert (figures 5 through 7 and 12 through 17). In the absence of the culvert, we might expect a gradual change in cross-section characteristics as the reach transitions into the broader valley of the Middle Fork Willamette. However, for width-to-depth ratio, wetted perimeter, and top width, the culvert is an anomaly in that trend. With the exception of flow area, the range of values for the culvert differs from that of comparable slope segments for nearly all of the cross-section metrics.

For all the cross-section metrics, the upstream transition segment (G) is mostly within the range of values of the upstream comparable segment (J). However, downstream segments with comparable gradient (A and C) differ substantially, especially at the higher flows. Although these discrepancies may be partly due to culvert influences, they are also likely affected by the natural change in valley width between these segments.

The downstream transition segment (E) is substantially different for nearly all cross-section metrics than segment H. It is difficult to distinguish the effect of the culvert from the influence of transitioning valley width and gradient through this reach. Segment H also has potential influence from channel incision, which limits its utility for comparisons.

Shear stress – The culvert (F) has lower shear stresses than the upstream comparative segments (H and J) (figures 10 and 19). Lower shear stress may be attributable to a lower energy slope in the pipe that is caused by outlet control conditions related to reduced pipe capacity from aggradation in the downstream portion of the pipe. The upstream transition segment (G) has similar shear to the upstream comparable segment (J) at the Q_{10} and below but less shear above the Q_{10}. Shear is comparable between G and the downstream segments with similar gradient (A and C). The downstream transition segment (E) has lower shear than comparable segment H.

Excess shear – The excess-shear analysis suggests that the potential for bed mobilization in the culvert is within the range of the downstream channel (figure 20) but is lower than the upstream channel. Higher channel shear in the upstream channel and slightly smaller D_{84} contribute to higher estimated bed mobility in the upstream channel when compared to the culvert.

Velocity – The variation of velocity in the culvert segment is more similar to the upstream channel than the downstream channel (figures 11 and 18). Culvert velocity is generally similar to the comparative segments H and J for all modeled flows. The range of velocity in the upstream transition segment (G) does not substantially differ from the comparable slope segments (A, C, and J). Velocity in the downstream transition segment (E) is generally lower than the comparative segment H, especially at the higher flows.

Scour summary

The culvert shows no significant bed scour. However, assuming the culvert and culvert bed were originally constructed at the same gradient, there has been bed adjustment. This adjustment is believed to be primarily related to the February 1996 flood event (approximately a 100-year flood), which resulted in profile adjustment through aggradation in the downstream portion of the pipe (Kim Johansen, personal communication). Some culvert capacity has been lost as a result. This is reflected in the model, with elevated water surface profiles through the culvert due to outlet control conditions. Despite this slight capacity reduction, this large culvert is at low risk of significant backwater or overtopping.

Conditions indicate a low risk for future scour in the culvert. There is likely to be a continued upstream supply of material as the channel continues to widen in response to the 1996 incision. Continued aggradation may occur downstream of the outlet where the valley widens and the slope flattens. Continued aggradation in the culvert is possible, especially at high flows where outlet control conditions reduce the energy slope in the pipe.

AOP CONDITIONS

Cross-section complexity – The sum of squared height differences in the culvert cross sections are both within the range of those in the channel cross sections (table 3).

Profile complexity – Vertical sinuosity in the culvert segment (F) and in the upstream transition segment (G) are greater than their comparable channel segments (table 4). This reflects a higher frequency of steps through these segments. Vertical sinuosity in the downstream transition segment (E) is the same as comparative segment H.

Depth distribution – There is less channel margin habitat in the culvert compared to the channel at the 25 percent Q_2 (table 5).

Habitat units – There is a similar habitat-unit composition between the culvert and the channel outside the crossing (table 6). There is slightly more pool habitat in the culvert and less step habitat. The number of steps in the culvert is high but they are shorter steps than the natural channel with more pool habitat in between. This could result in more turbulent conditions in the short pools during high flows, with less resting habitat compared to the channel where pools are longer and more pool area is outside the influence of turbulence created by the upstream step.

Residual depths – Culvert-residual depths ranged from 0.11 feet to 1.17 feet and were within the range of the comparable slope segment J (figure 21). The upstream transition segment was also within the range of comparable slope segments. Residual depth in the downstream transition segment (E) was within a few inches of that found in the comparable slope segment H.

Bed material – Bed-material distributions are similar in the culvert compared to the channel (see pebble-count data provided at end of this site summary). There are slightly less gravels in the culvert. The size and frequency of the large particles in the culvert are similar to the upstream channel but greater than the downstream channel. This partly reflects the gradient transition through the crossing but also reflects the large rocks that were placed during construction. Culvert bed material sorting values are all within the range found in the stream channel (table 7). Sorting values indicate “poor” sorting, which is typical for step-pool systems. The bed material skewness value in the upstream cross section

in the culvert is less than any skewness values in the channel. The low value indicates a nearly normal (symmetrical) distribution, which is due to a lack of material in most of the smaller size classes (less than 22.6 millimeters). The distribution among the larger size classes is similar to that found in the channel cross sections.

Large woody debris – There was no LWD present in the culvert (table 8). The representative channel had very high LWD abundance, but most of the wood was smaller pieces of alder along the channel margins, with occasional large pieces creating lateral scour pools. This channel margin wood would provide velocity refuge for fish at high flows. This condition was not present in the culvert.

AOP summary

Measurements and observations suggest that the Simpson-Creek culvert has similar conditions to the natural channel with respect to AOP, with potential passage issues only at higher flows when turbulence and lack of margin areas in the culvert may reduce passability.

Cross-section complexity in the culvert is within the range of that found in the channel. Culvert-residual depths are also similar to the channel; however, the vertical sinuosity in the culvert (and in the upstream transition) is greater, which indicates a different bedform pattern in the culvert region. This is likely related to the large material that was placed at frequent intervals in the culvert during construction, including the "fish rest stop" rocks. At lower fish passage flows (i.e., an average spring, summer, or fall flow) these frequent steps could provide ample velocity refuge for passage; however, at larger flows the frequent steps could create turbulence within the adjoining small pools, potentially limiting the availability of low energy areas for fish to hold during migration. Furthermore, based on the depth-distribution analysis, suitable channel margin areas would not be available during these higher events.

Bed-material composition is similar between the culvert and the channel segments, with only slight differences that can be explained by the gradient transition through the reach and the placement of boulders during construction. These similar bed compositions suggest that AOP is not impaired by the characteristics of the culvert bed material.

DESIGN CONSIDERATIONS

Despite moderate bed adjustments, this design has functioned well, especially considering that it experienced an approximate 100-year flood within 5 months following installation. It is uncertain the degree to which channel incision is related to the culvert design as opposed to naturally occurring incision during the Q_{100} flood. In either case, over 10 years later the culvert appears capable of conveying flood flows without overtopping, scouring, or significantly altering channel hydraulics. Hydraulic modeling indicates that even at the Q_{100}, the total culvert diameter would only be submerged 50 percent at the inlet and less than 75 percent at the outlet, which exceeds standard design criteria.

An increase in channel margin areas (i.e., through bank construction within a wider culvert) could benefit fish passage by creating shallower flows along channel margins during high fish passage flows (e.g., 25 percent Q_2). Additionally, lengthening the pool/step sequence in the culvert so that it better matches the spacing found in the channel could improve passability by reducing the inter-step (pool) turbulence.

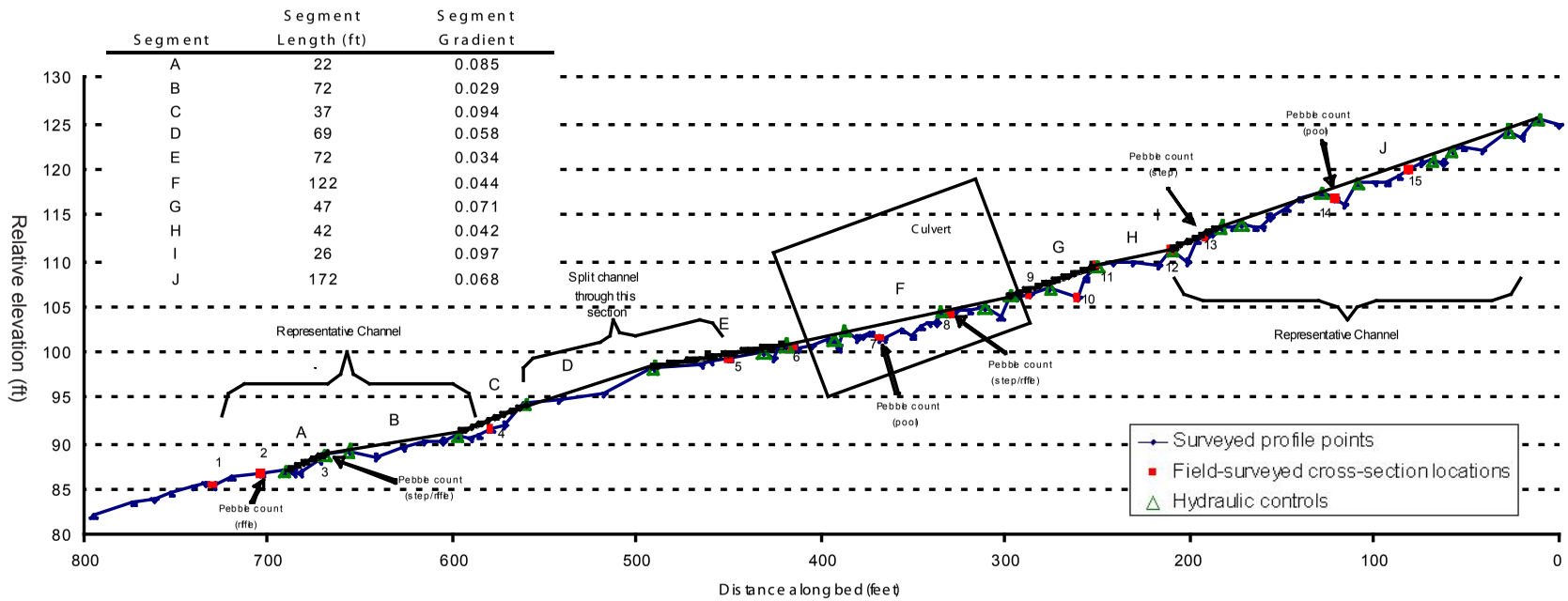

Figure 2—Simpson Creek longitudinal profile.

Table 1—Segment comparisons

Culvert Segment	Representative Channel Segment	% Difference in Gradient
F	H	5.1%
F	J	35.0%
Upstream Transition		
G	J	4.3%
G	A	16.5%
G	C	24.5%
Downstream Transition		
E	H	17.6%

Table 2—Summary of segments used for comparisons

Segment	Range of Manning's n values[1]	# of measured XSs	# of interpolated XSs
A	0.1138 – 0.1143	1	4
C	0.115 – 0.1164	1	5
E	0.1147 – 0.127	1	9
F	0.105 – 0.1299	3	16
G	0.0903 – 0.1409	3	4
H	0.1309 – 0.1376	2	4
J	0.117 – 0.131	2	12

[1]Obtained using equation from Jarrett (1984): n = 0.39S0.38R-0.16, where S=stream slope; R=hydraulic radius. Jarrett's equation only applied within the following ranges: S = 0.002 to 0.08, R = 0.5 ft to 7 ft. For cross-sections outside these ranges, n was computed either from adjacent sections that fell within the ranges, using the guidance of Arcement and Schneider (1987), or from the HEC-RAS recommendations for culvert modeling.

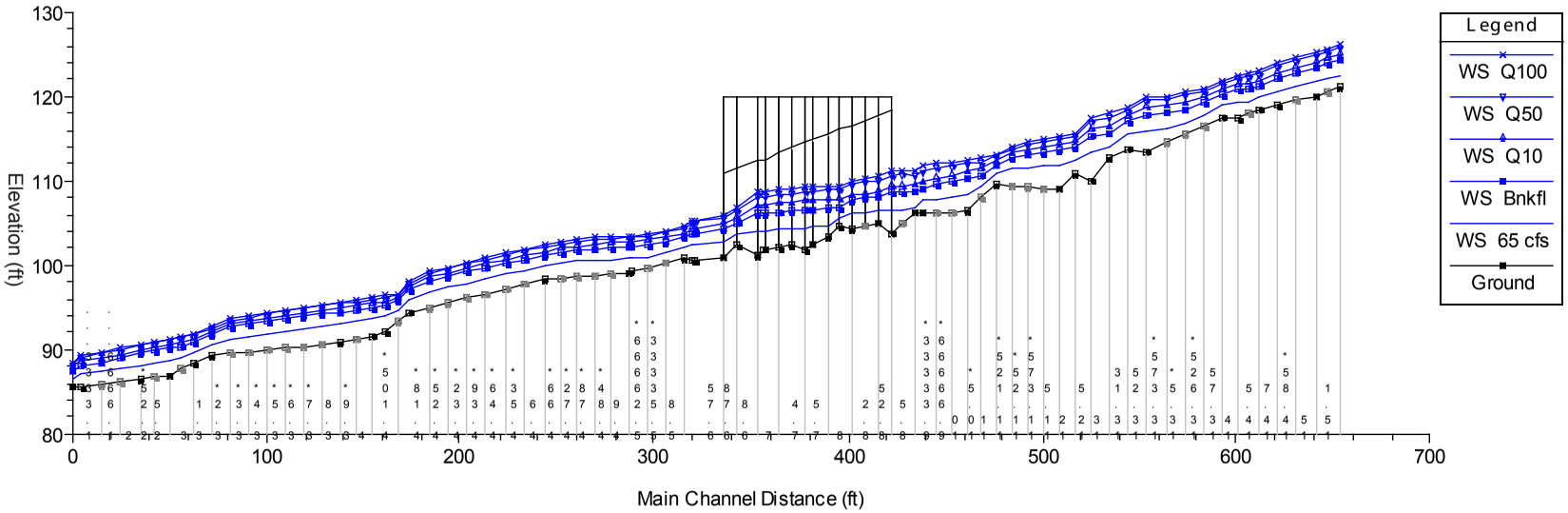

Stations with decimal values are interpolated cross sections placed along the surveyed profile.

Figure 3—HEC-RAS profile.

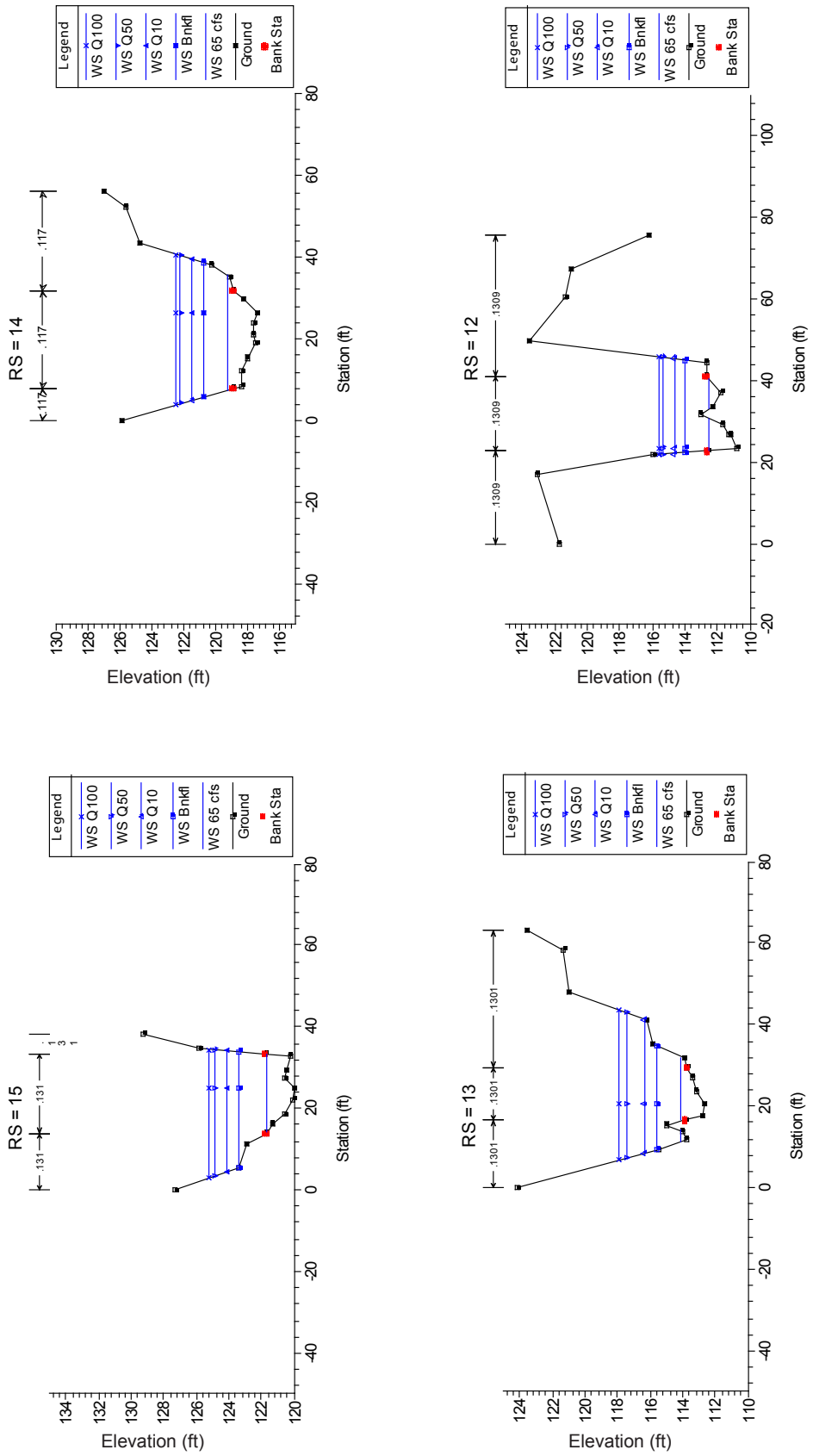

Figure 4—Cross-section plots. Only measured cross sections are included. Manning's n values are included at the top of the cross section. The stationing (RS) corresponds to the stationing on the HEC-RAS profile. Green arrows define the ineffective flow areas. Black arrows represent points identified in the field as the bankfull channel boundary. Only those points identified in the field and supported by hydraulic and topographic analyses are shown below.

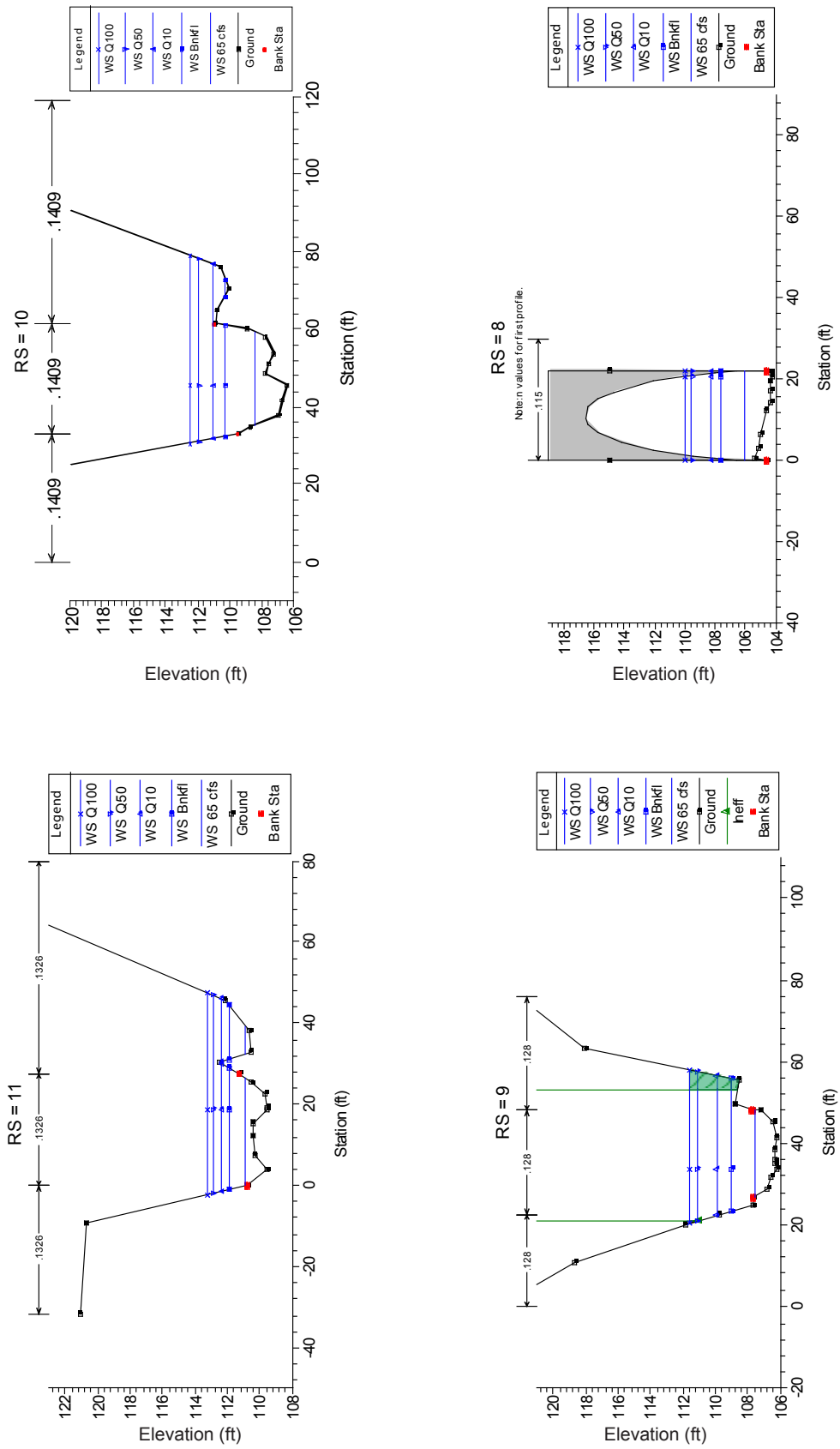

Figure 4—Cross-section plots. Only measured cross sections are included. Manning's n values are included at the top of the cross section. The stationing (RS) corresponds to the stationing on the HEC-RAS profile. Green arrows define the ineffective flow areas. Black arrows represent points identified in the field as the bankfull channel boundary. Only those points identified in the field and supported by hydraulic and topographic analyses are shown below. (continued)

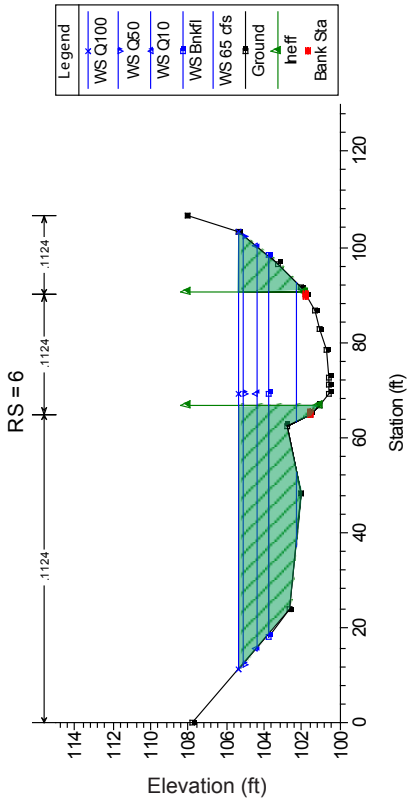

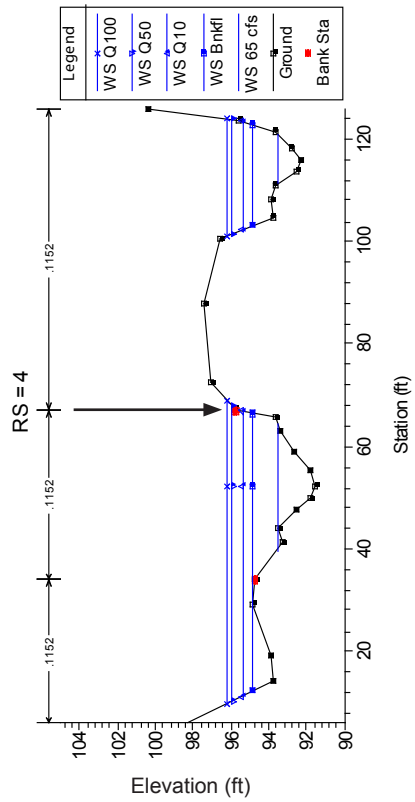

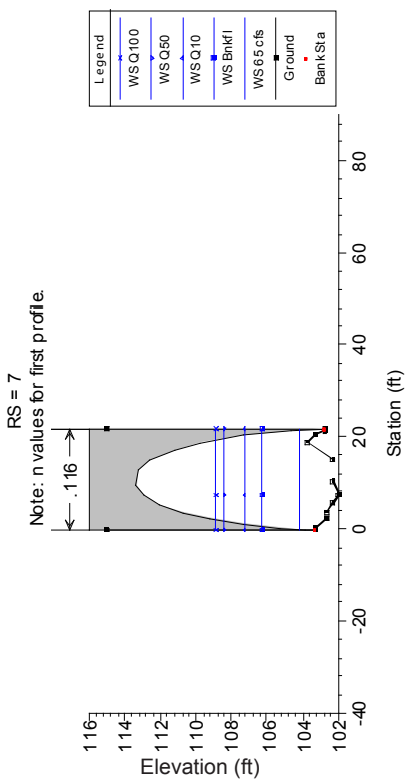

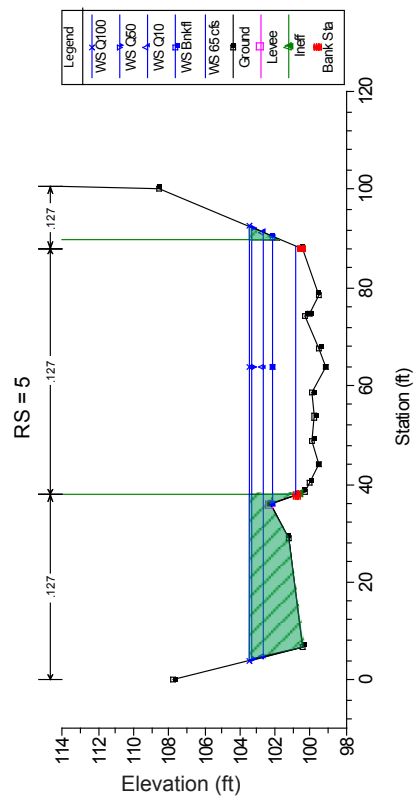

Figure 4—Cross-section plots. Only measured cross sections are included. Manning's n values are included at the top of the cross section. The stationing (RS) corresponds to the stationing on the HEC-RAS profile. Green arrows define the ineffective flow areas. Black arrows represent points identified in the field as the bankfull channel boundary. Only those points identified in the field and supported by hydraulic and topographic analyses are shown below. (continued)

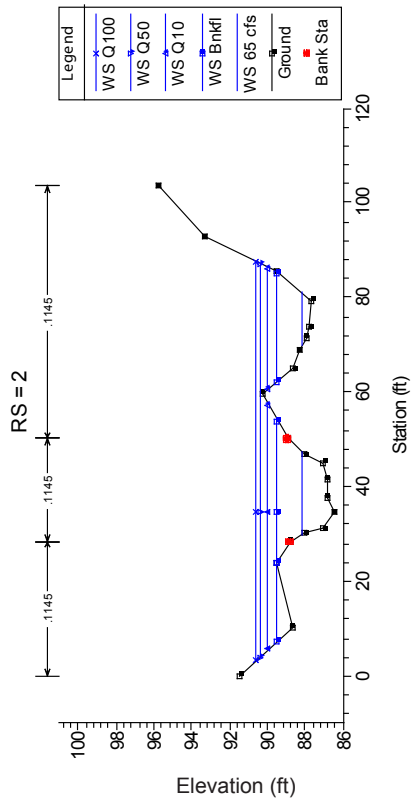

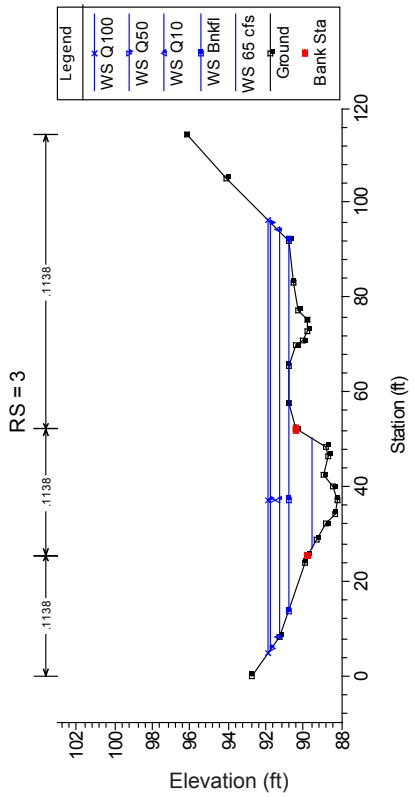

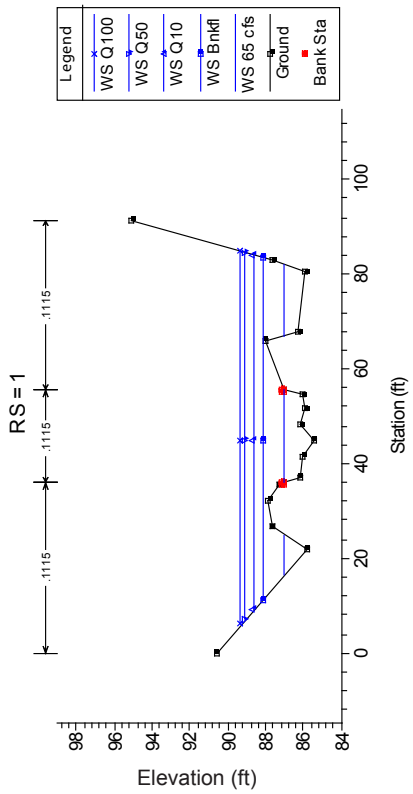

Figure 4—Cross-section plots. Only measured cross sections are included. Manning's n values are included at the top of the cross section. The stationing (RS) corresponds to the stationing on the HEC-RAS profile. Green arrows define the ineffective flow areas. Black arrows represent points identified in the field as the bankfull channel boundary. Only those points identified in the field and supported by hydraulic and topographic analyses are shown below. (continued)

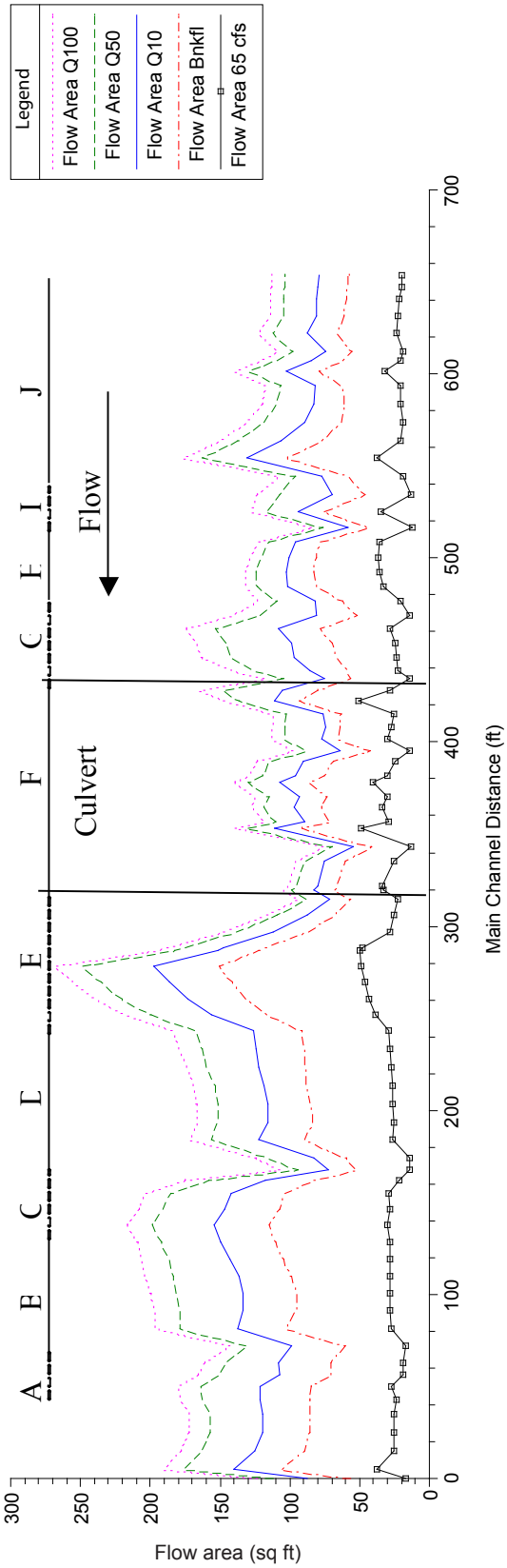

Figure 5—Flow area (total) profile plot.

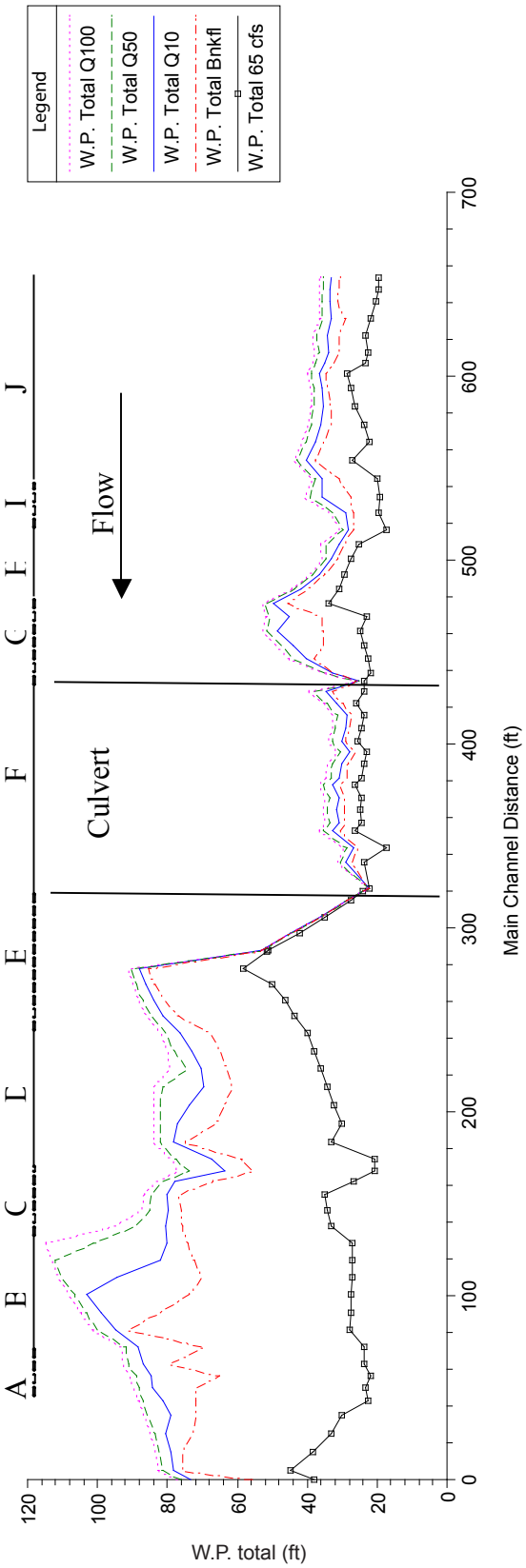

Figure 6—Wetted perimeter.

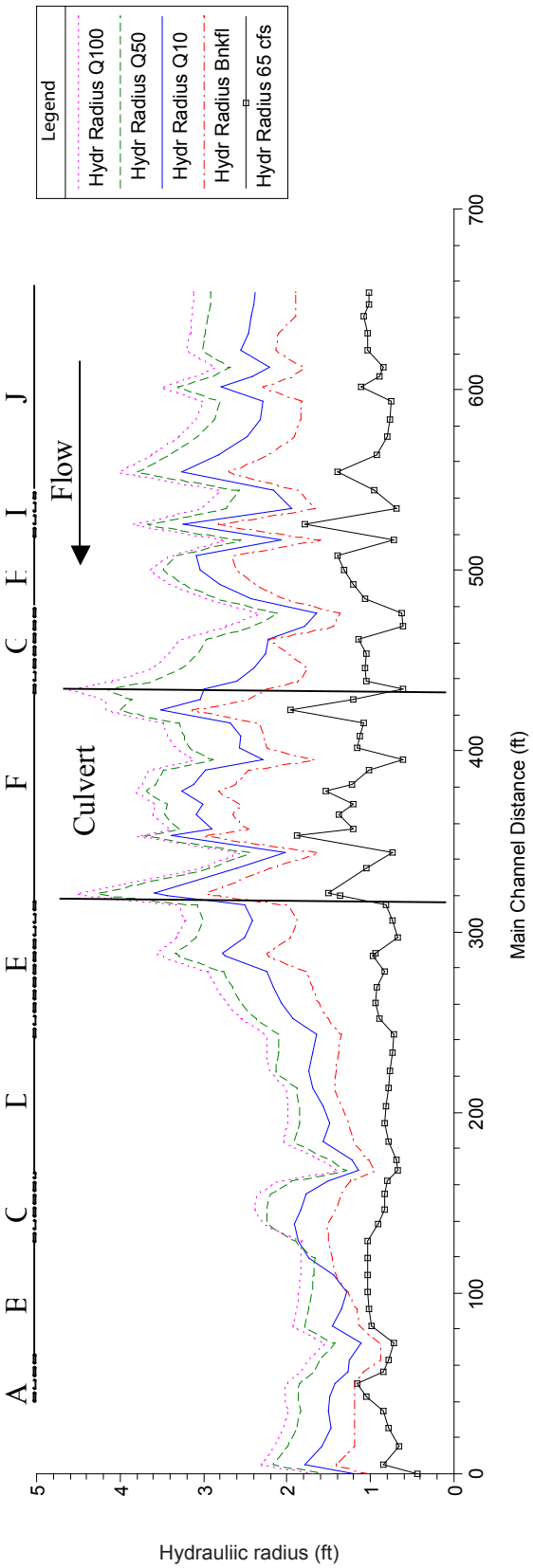

Figure 7—Hydraulic radius.

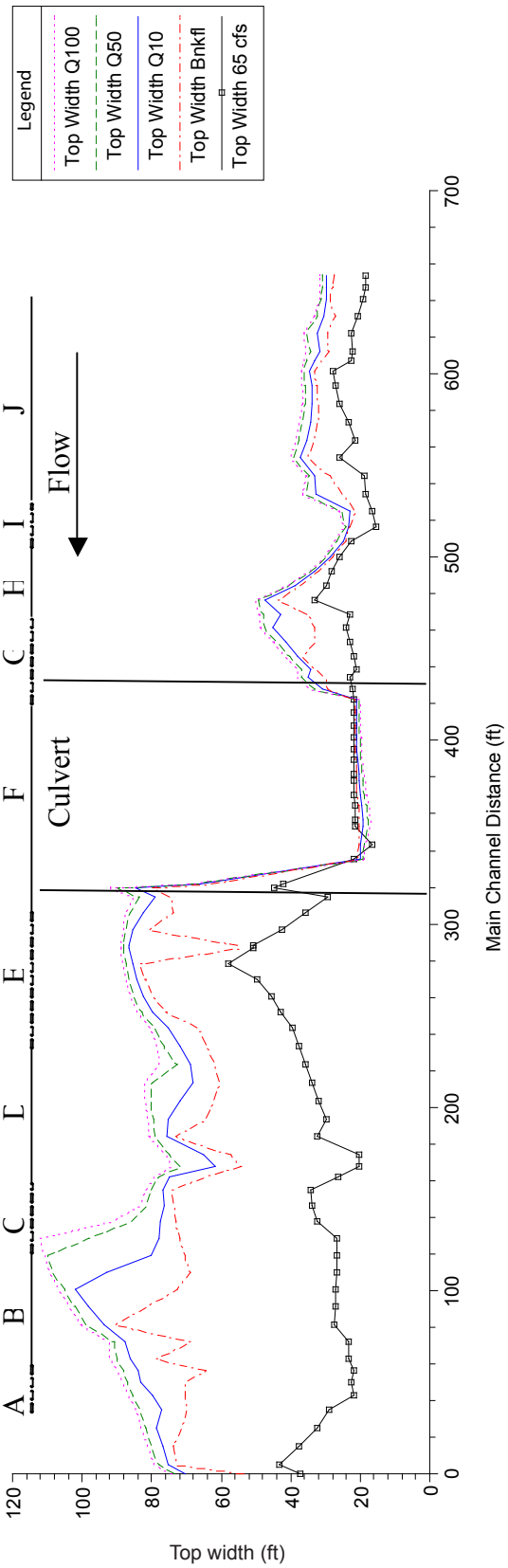

Figure 8—Top width.

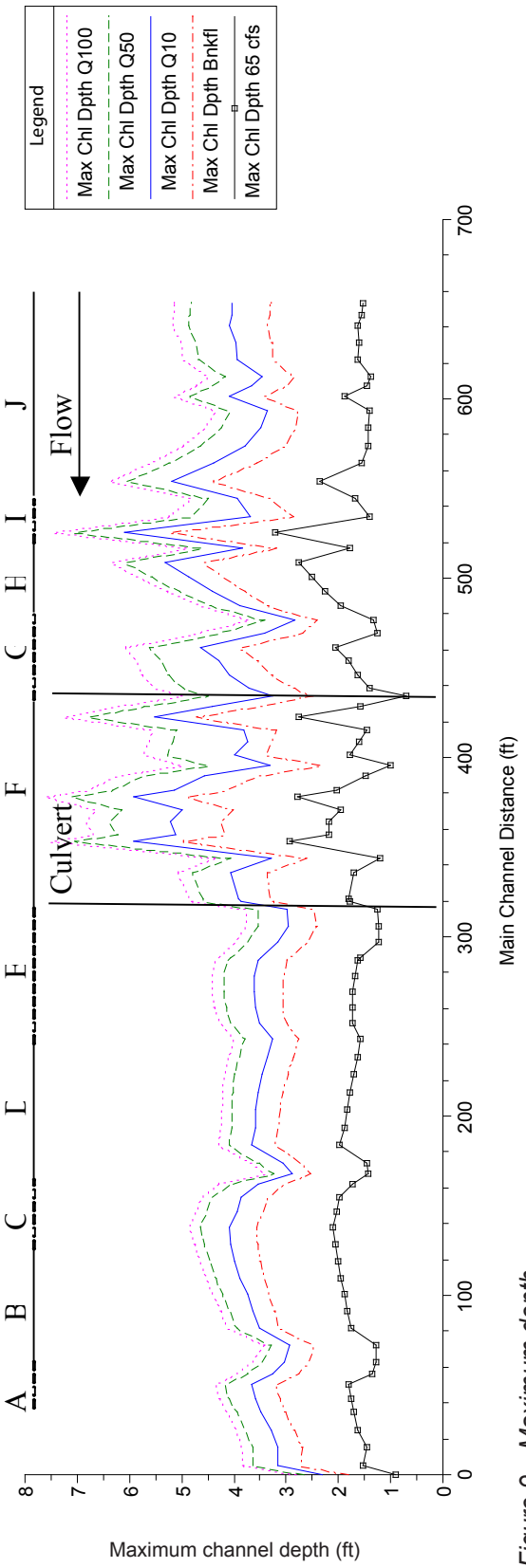

Figure 9—Maximum depth.

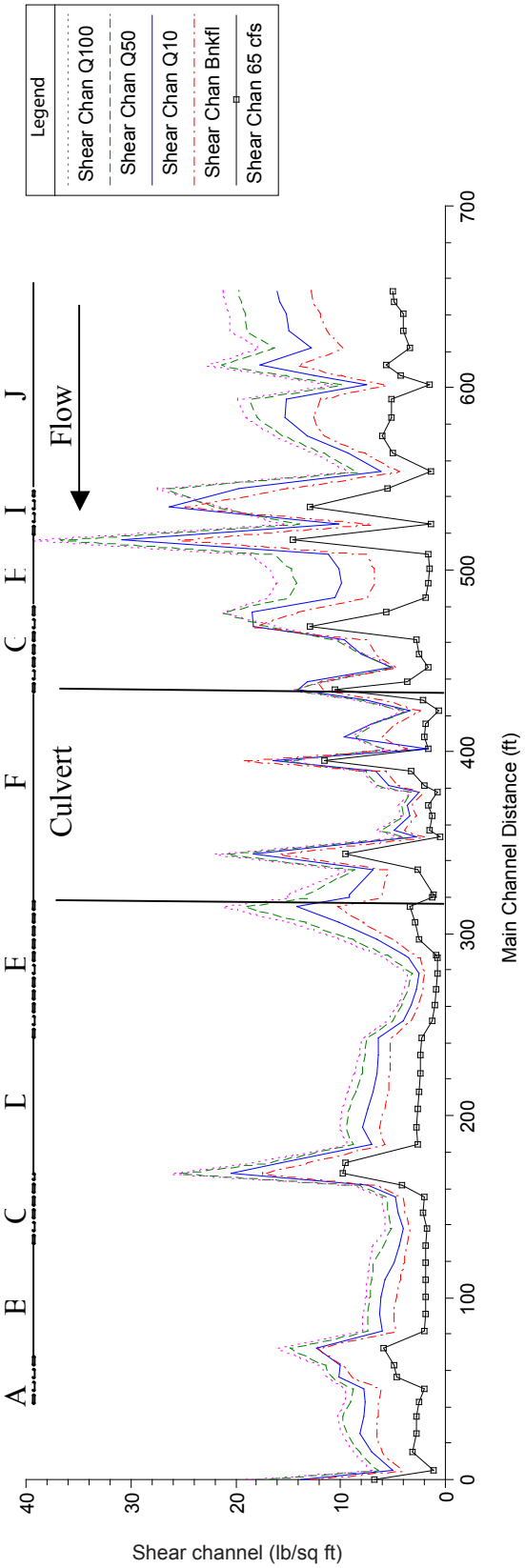

Figure 10—Shear stress (channel) profile.

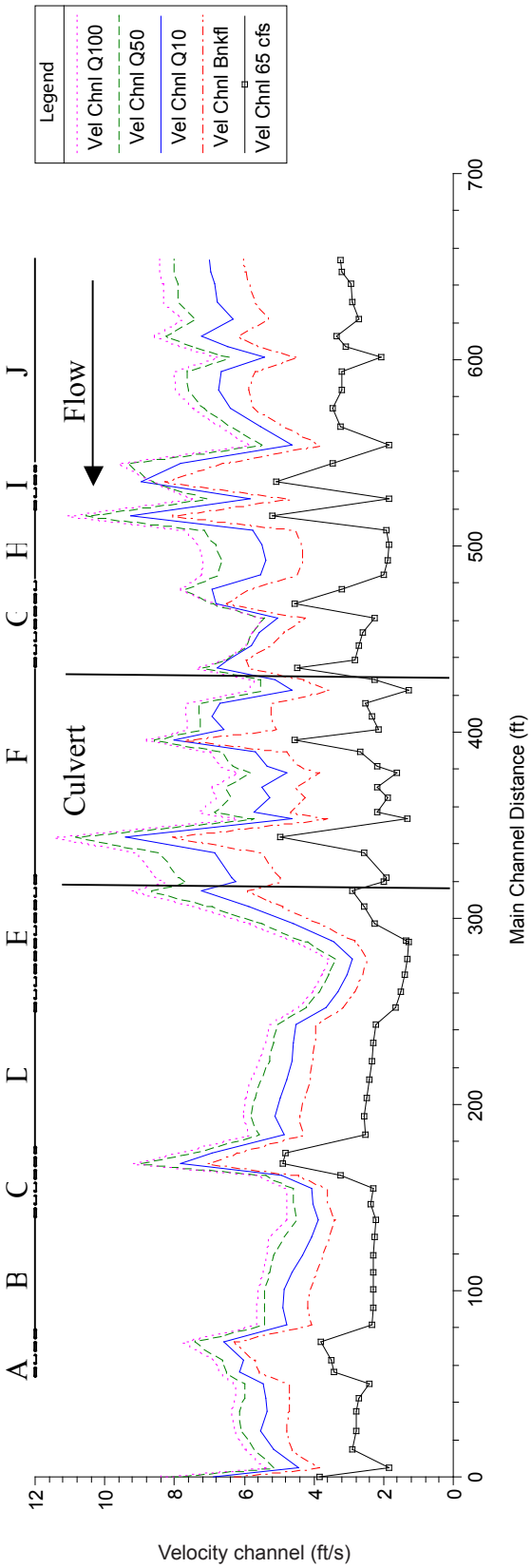

Figure 11—Velocity (channel) profile plot.

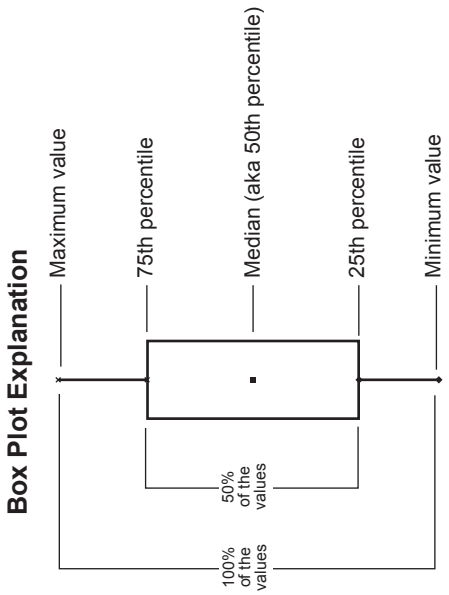

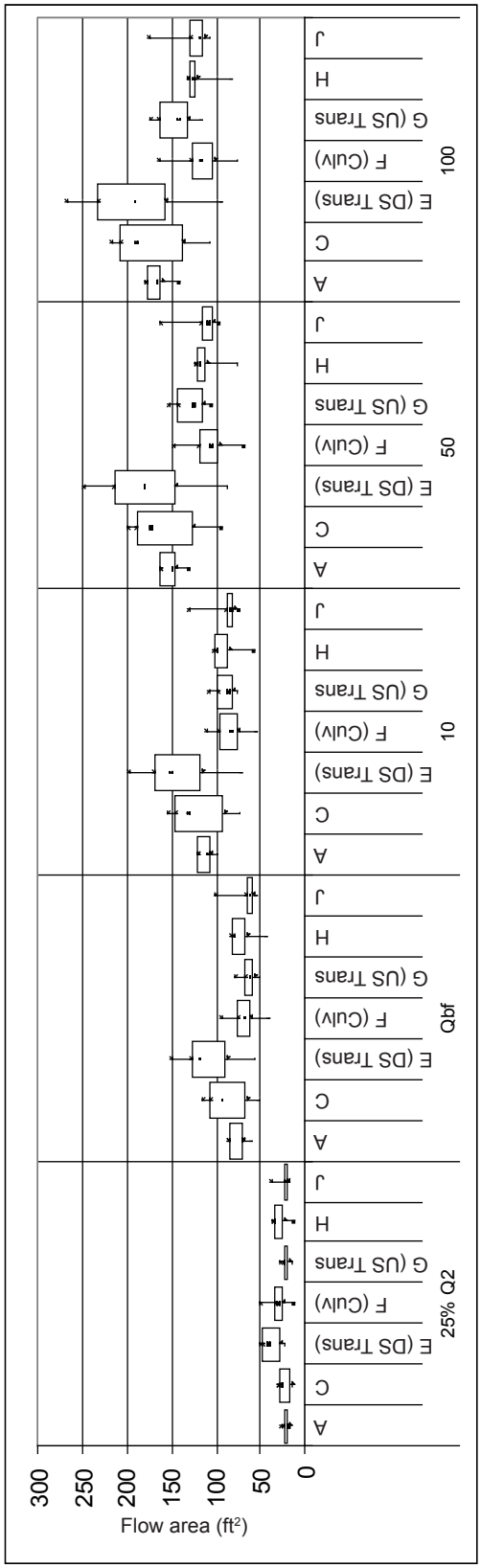

Figure 12—Flow area (total).

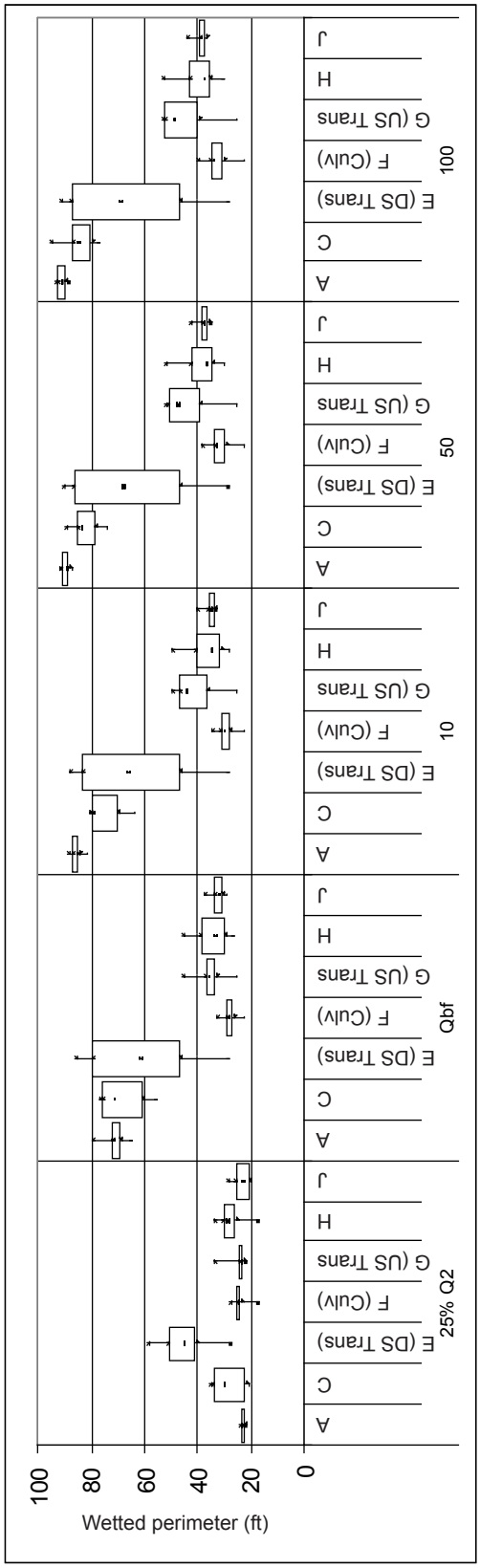

Figure 13—Wetted perimeter.

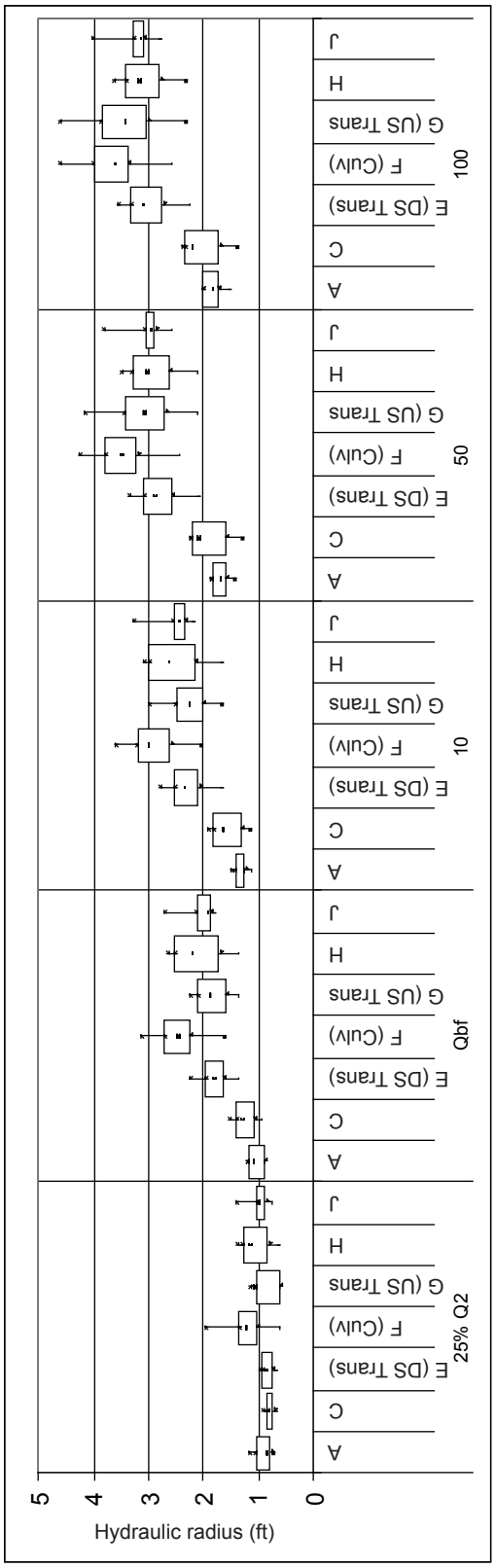

Figure 14—Hydraulic radius.

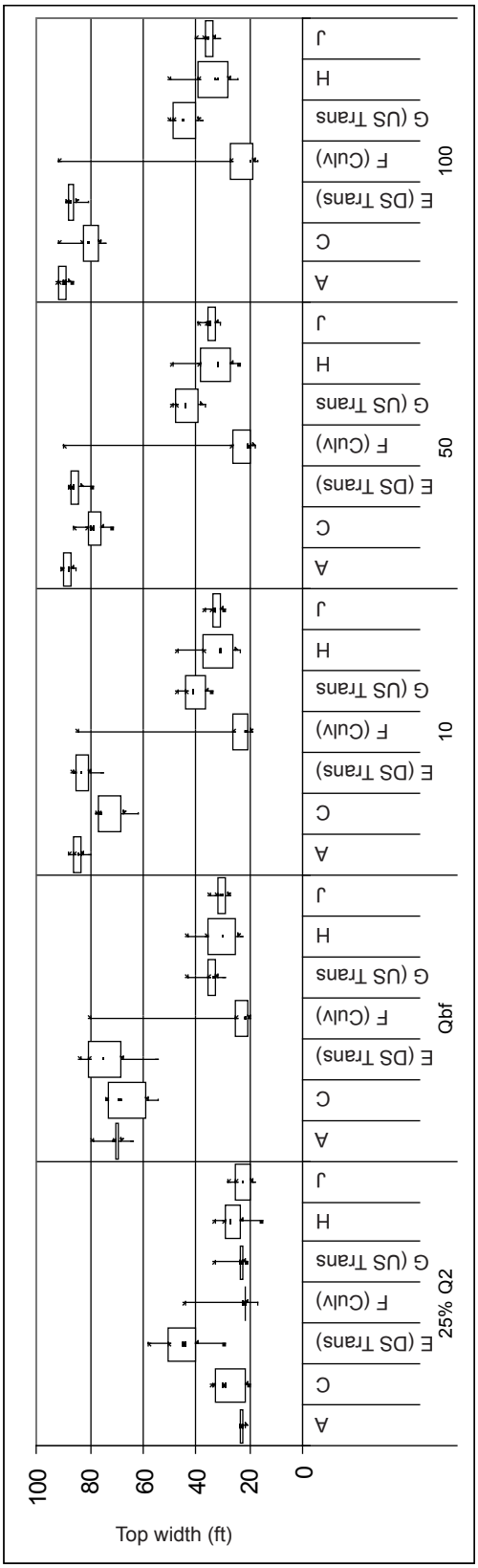

Figure 15—Top width.

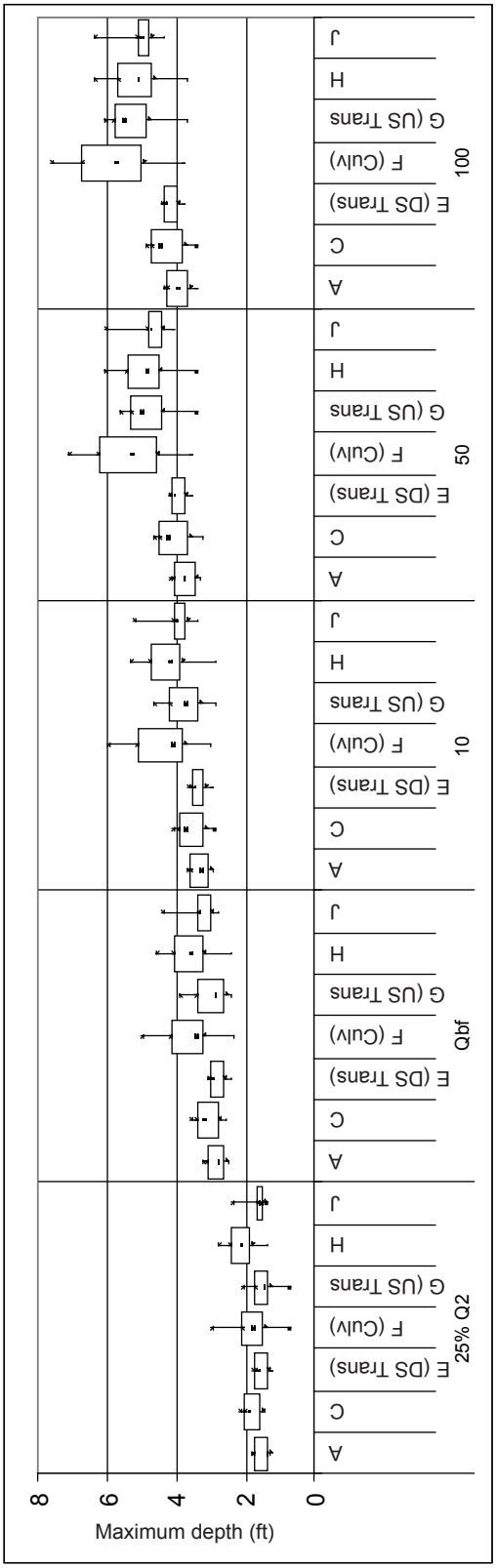

Figure 16—Maximum depth.

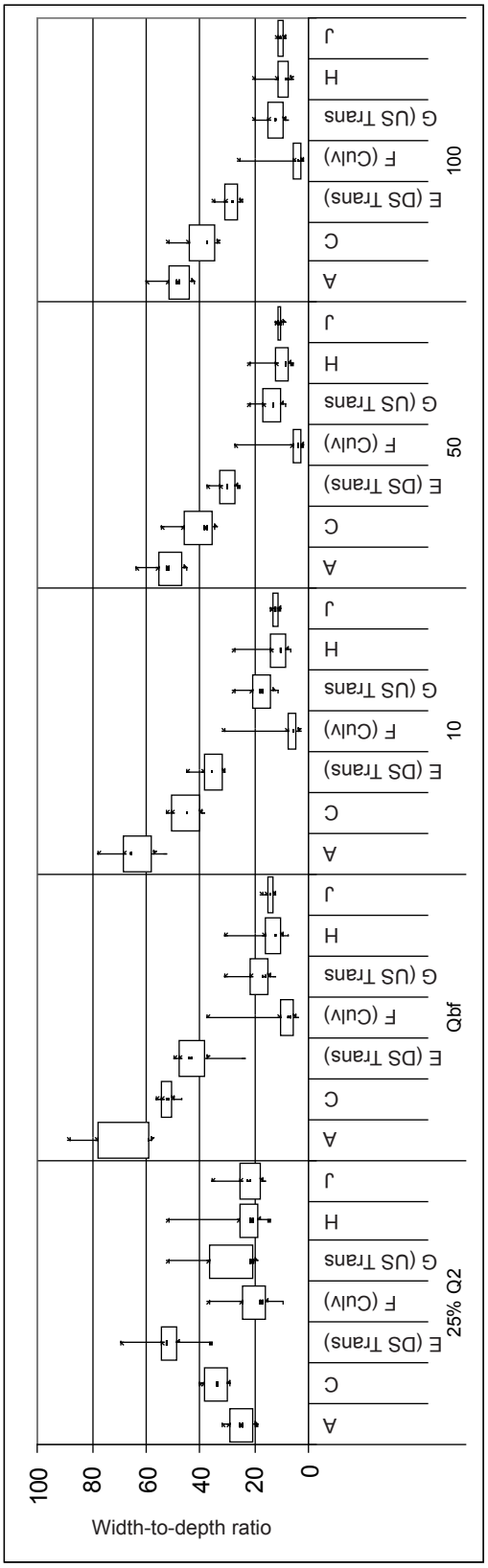

Figure 17—Width-to-depth ratio.

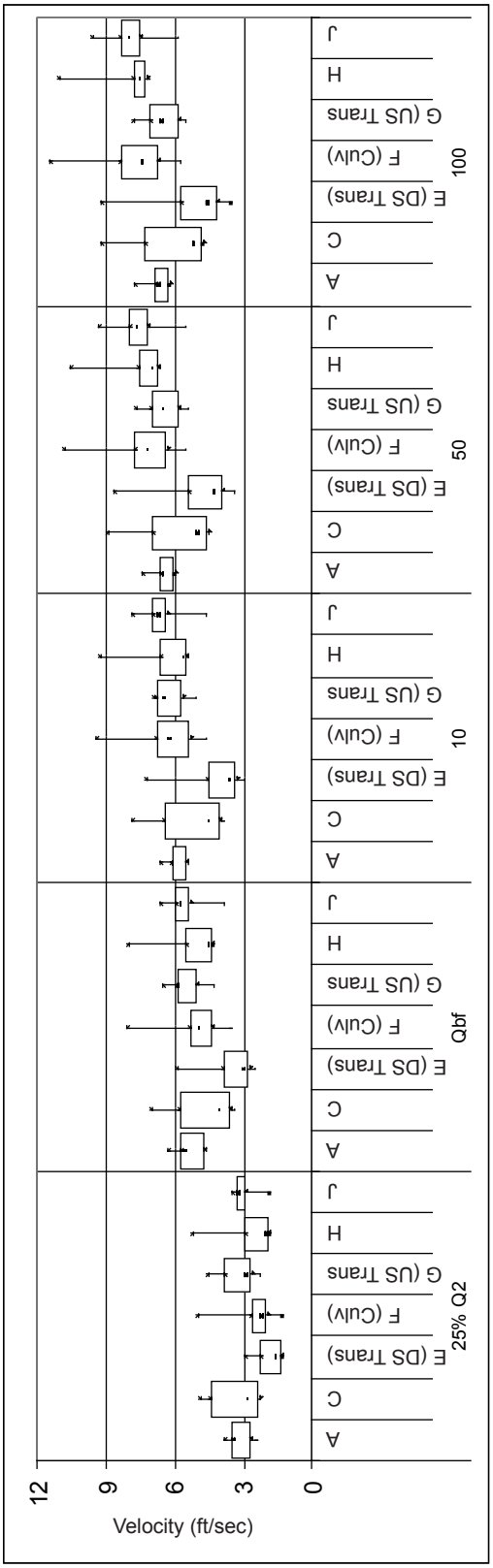

Figure 18—Velocity (channel).

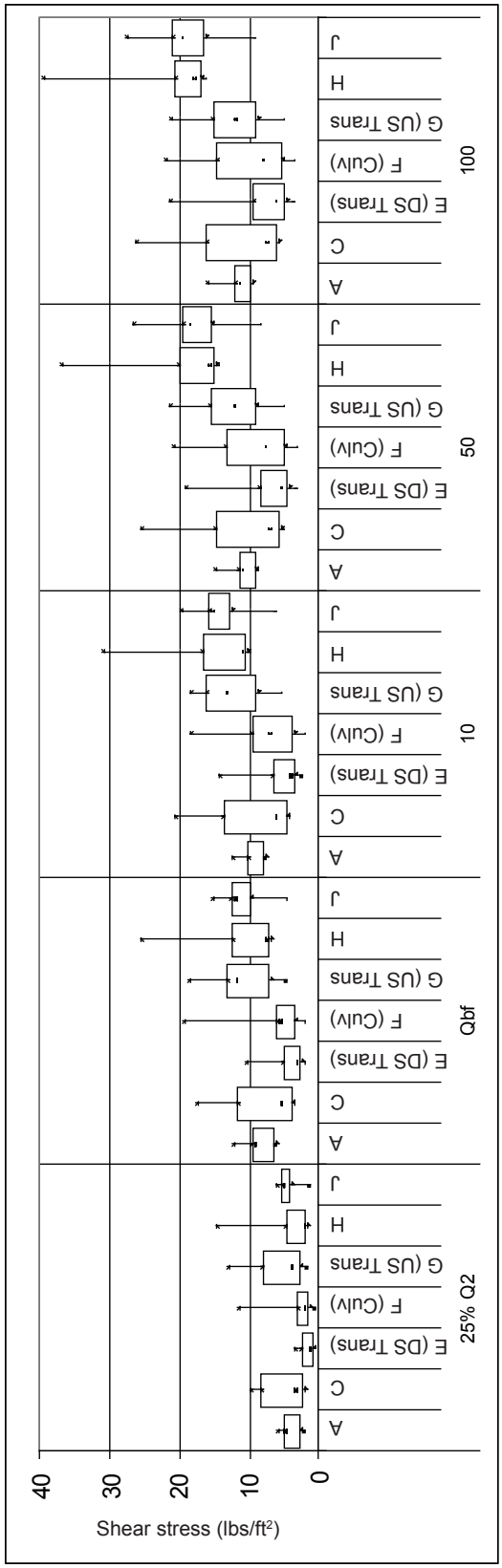

Figure 19—Shear stress (channel).

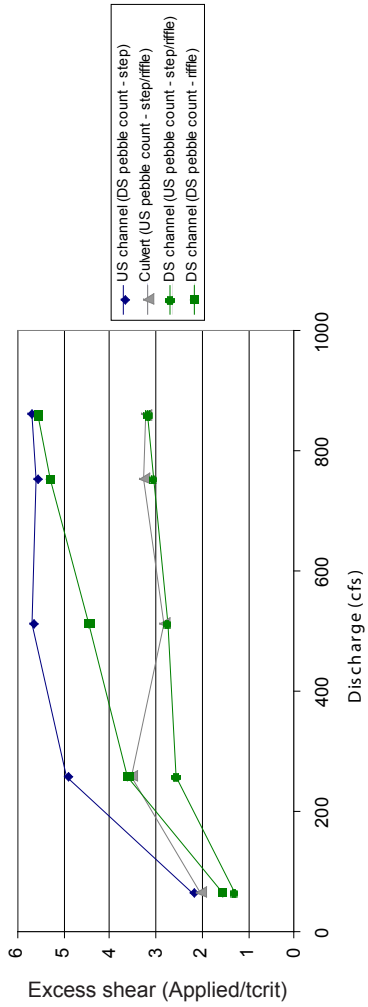

Excess shear stress is the channel shear divided by the critical shear for bed entrainment of the D_{84} particle size. Values of excess shear greater than 1 indicate bed movement for the D_{84} particle size.

Figure 20—Excess shear stress.

Table 3—Sum of squared height difference

Reach	XS Location	Unit type	Sum of squared height difference	Within range of channel conditions?
Culvert	US	Step	0.04	Yes
	DS	Pool	0.13	Yes
Upstream	US	Pool	0.03	
	DS	Step	0.19	
Downstream	US	Step	0.03	
	DS	Riffle	0.03	

Table 4—Vertical sinuosity

Segment	Location	Vertical Sinuosity (ft/ft)
A	DS channel	1.007
B	DS channel	1.001
C	DS channel	1.008
D	DS channel	1.003
E	DS Transition	1.005
F	Culvert	1.015
G	US Transition	1.015
H	US channel	1.005
I	US channel	1.024
J	US channel	1.009

Table 5—Depth distribution

Reach	XS Location	25% Q_2	Within range of channel conditions?
Culvert	US	0	No
	DS	0	No
Upstream	US	5	
	DS	10	
Downstream	US	5	
	DS	9	

Table 6—Habitat unit composition

Reach	Percent of surface area			
	Pool	Glide	Riffle	Step
Culvert	53%	0%	39%	8%
Upstream Channel	47%	0%	30%	23%
Downstream Channel	20%	0%	63%	26%

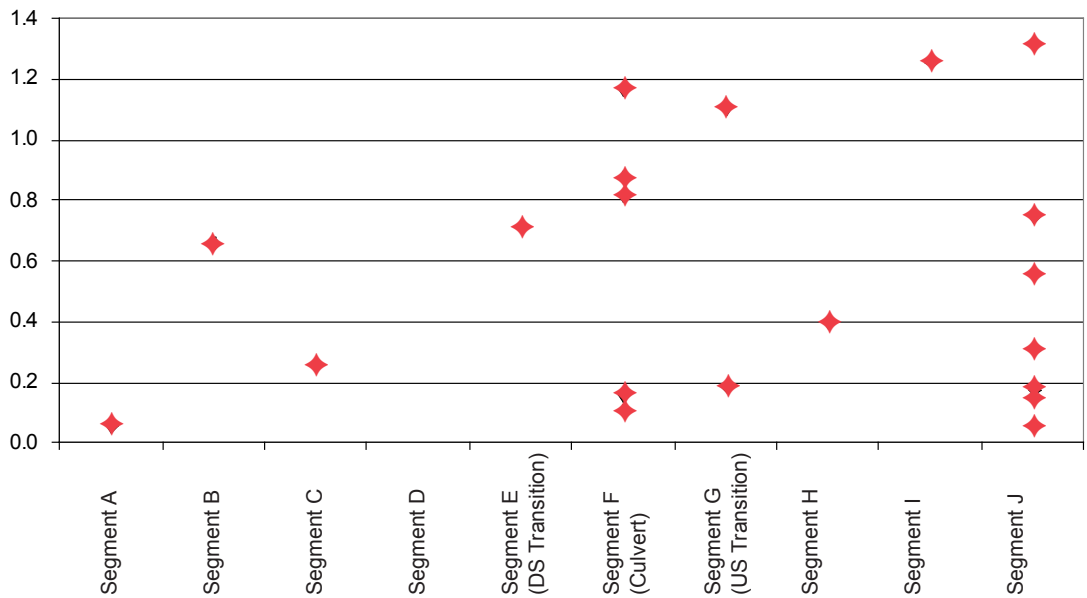

Figure 21—Residual depths.

Table 7—Bed material sorting and skewness

Reach	XS Location	Unit Type	Sorting	Within range of channel conditions?	Skewness	Within range of channel conditions?
Culvert	US	Step	1.45	Yes	0.03	No
	DS	Pool	1.53	Yes	0.13	Yes
Upstream	US	Pool	1.95		0.12	
	DS	Step	1.71		0.14	
Downstream	US	Step	1.46		0.31	
	DS	Riffle	1.21		0.12	

Table 8—Large woody debris

Reach	Pieces/Channel Width
Culvert	0
Upstream	4.13
Downstream	5.12

Terminology:

US = Upstream

DS = Downstream

RR = Reference reach

XS = Cross section

View upstream towards outlet.

View downstream towards inlet.

View upstream from roadway.

Upstream reference reach.

Upstream reference reach – upstream pebble count, pool.

Upstream reference reach – downstream pebble count, step.

Downstream reference reach.

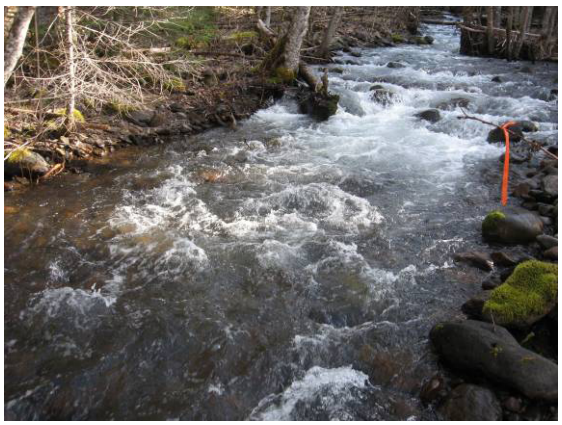

Downstream reference reach – downstream pebble count (riffle).

Downstream reference reach – upstream pebble count (riffle/step).

View upstream in culvert.

Cross Section: Upstream Reference Reach – Upstream Pebble Count

Material	Size Class (mm)	Count	Item %	Cumulative %
sand	<2	2	2%	2%
very fine gravel	2 - 4	3	3%	5%
fine gravel	4 - 5.7	1	1%	6%
fine gravel	5.7 - 8	3	3%	8%
medium gravel	8 - 11.3	1	1%	9%
medium gravel	11.3 - 16	6	6%	15%
coarse gravel	16 - 22.6	5	5%	20%
coarse gravel	22.6 - 32	7	7%	26%
very coarse gravel	32 - 45	8	7%	34%
very coarse gravel	45 - 64	9	8%	42%
small cobble	64 - 90	14	13%	55%
medium cobble	90 - 128	7	7%	62%
large cobble	128 - 180	7	7%	68%
very large cobble	180 - 256	13	12%	80%
small boulder	256 - 362	11	10%	91%
small boulder	362 - 512	7	7%	97%
medium boulder	512 - 1024	3	3%	100%
large boulder	1024 - 2048	0	0%	100%
very large boulder	2048 - 4096	0	0%	100%
bedrock	Bedrock	0	0%	100%

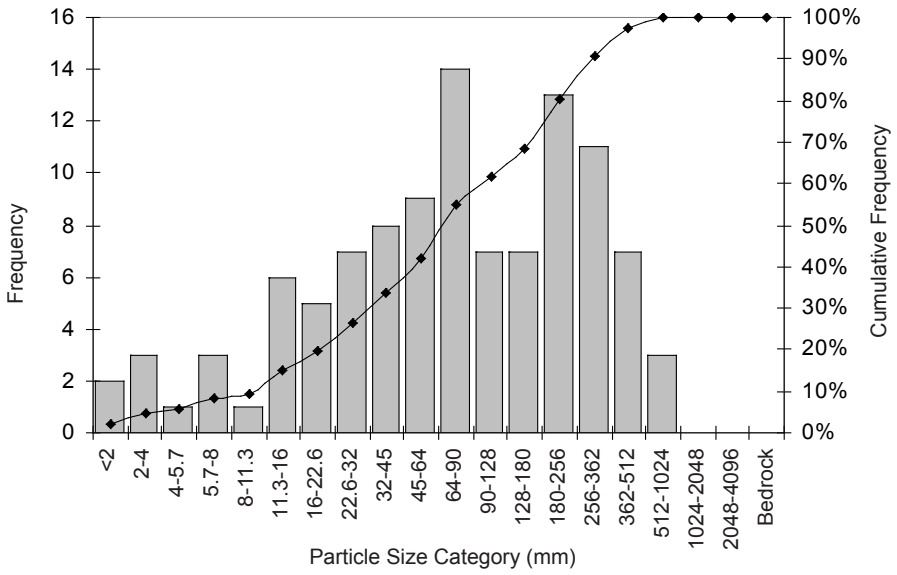

Size Class	Size percent finer than (mm)
D5	5.3
D16	19.92
D50	80
D84	300
D95	457
D100	700

Material	Percent Composition
Sand	2%
Gravel	40%
Cobble	38%
Boulder	20%
Bedrock	0%

Sorting Coefficient: 1.95
Skewness Coefficient: 0.12

Cross Section: Upstream Reference Reach – Downstream Pebble Count

Material	Size Class (mm)	Count	Item %	Cumulative %
sand	<2	0	0%	0%
very fine gravel	2 - 4	1	1%	1%
fine gravel	4 - 5.7	1	1%	2%
fine gravel	5.7 - 8	2	2%	4%
medium gravel	8 - 11.3	1	1%	5%
medium gravel	11.3 - 16	1	1%	6%
coarse gravel	16 - 22.6	5	5%	12%
coarse gravel	22.6 - 32	3	3%	15%
very coarse gravel	32 - 45	7	8%	23%
very coarse gravel	45 - 64	6	6%	29%
small cobble	64 - 90	10	11%	40%
medium cobble	90 - 128	8	9%	48%
large cobble	128 - 180	15	16%	65%
very large cobble	180 - 256	9	10%	74%
small boulder	256 - 362	9	10%	84%
small boulder	362 - 512	6	6%	90%
medium boulder	512 - 1024	6	6%	97%
large boulder	1024 - 2048	3	3%	100%
very large boulder	2048 - 4096	0	0%	100%
bedrock	Bedrock	0	0%	100%

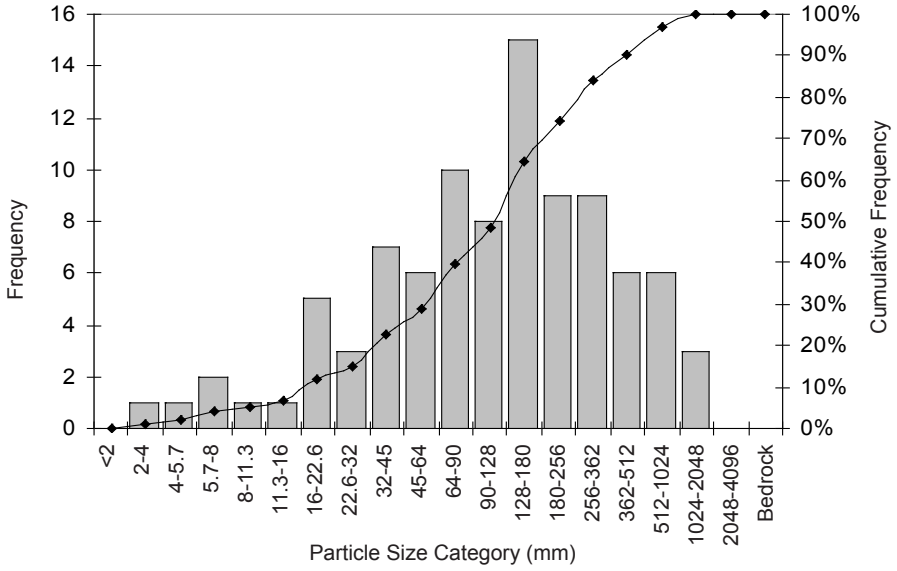

Size Class	Size percent finer than (mm)
D5	13
D16	35
D50	130
D84	365.6
D95	682
D100	1200

Material	Percent Composition
Sand	0%
Gravel	29%
Cobble	45%
Boulder	26%
Bedrock	0%

Sorting Coefficient: 1.71
Skewness Coefficient: 0.14

Cross Section: Culvert – Upstream Pebble Count

Material	Size Class (mm)	Count	Item %	Cumulative %
sand	<2	1	1%	1%
very fine gravel	2 - 4	0	0%	1%
fine gravel	4 - 5.7	3	3%	4%
fine gravel	5.7 - 8	0	0%	4%
medium gravel	8 - 11.3	0	0%	4%
medium gravel	11.3 - 16	0	0%	4%
coarse gravel	16 - 22.6	0	0%	4%
coarse gravel	22.6 - 32	6	6%	10%
very coarse gravel	32 - 45	5	5%	15%
very coarse gravel	45 - 64	6	6%	21%
small cobble	64 - 90	16	16%	37%
medium cobble	90 - 128	8	8%	45%
large cobble	128 - 180	11	11%	57%
very large cobble	180 - 256	7	7%	64%
small boulder	256 - 362	16	16%	80%
small boulder	362 - 512	12	12%	92%
medium boulder	512 - 1024	8	8%	100%
large boulder	1024 - 2048	0	0%	100%
very large boulder	2048 - 4096	0	0%	100%
bedrock	Bedrock	0	0%	100%

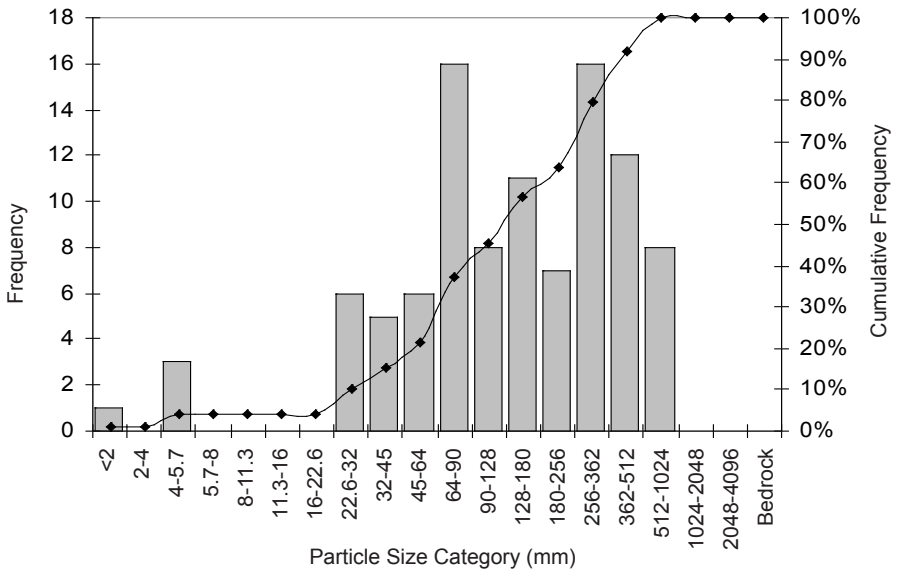

Size Class	Size percent finer than (mm)
D5	25
D16	50
D50	140
D84	403.2
D95	610
D100	800

Material	Percent Composition
Sand	1%
Gravel	20%
Cobble	42%
Boulder	36%
Bedrock	0%

Sorting Coefficient: 1.45
Skewness Coefficient: 0.03

Cross Section: Culvert – Downstream Pebble Count

Material	Size Class (mm)	Count	Item %	Cumulative %
sand	<2	0	0%	0%
very fine gravel	2 - 4	0	0%	0%
fine gravel	4 - 5.7	0	0%	0%
fine gravel	5.7 - 8	2	2%	2%
medium gravel	8 - 11.3	0	0%	2%
medium gravel	11.3 - 16	1	1%	3%
coarse gravel	16 - 22.6	3	3%	6%
coarse gravel	22.6 - 32	1	1%	7%
very coarse gravel	32 - 45	12	12%	20%
very coarse gravel	45 - 64	5	5%	25%
small cobble	64 - 90	10	10%	35%
medium cobble	90 - 128	11	11%	46%
large cobble	128 - 180	9	9%	56%
very large cobble	180 - 256	18	19%	74%
small boulder	256 - 362	8	8%	82%
small boulder	362 - 512	10	10%	93%
medium boulder	512 - 1024	7	7%	100%
large boulder	1024 - 2048	0	0%	100%
very large boulder	2048 - 4096	0	0%	100%
bedrock	Bedrock	0	0%	100%

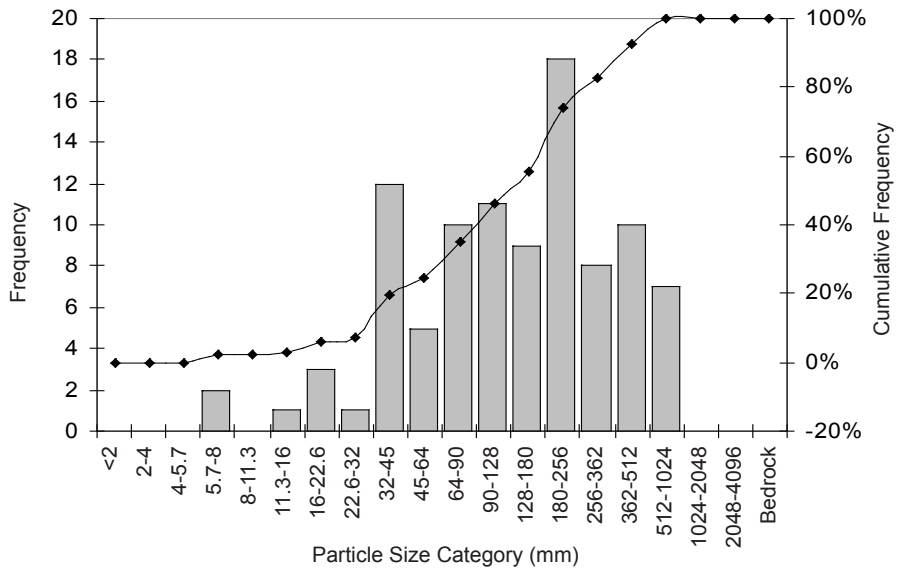

Size Class	Size percent finer than (mm)
D5	21.6
D16	40
D50	140
D84	386.4
D95	554
D100	720

Material	Percent Composition
Sand	0%
Gravel	25%
Cobble	49%
Boulder	26%
Bedrock	0%

Sorting Coefficient: 1.53
Skewness Coefficient: 0.13

Cross Section: Downstream Reference R

Cross Section: Downstream Reference Reach – Upstream Pebble Count

Material	Size Class (mm)	Count	Item %	Cumulative %
sand	<2	1	1%	1%
very fine gravel	2 - 4	1	1%	2%
fine gravel	4 - 5.7	1	1%	3%
fine gravel	5.7 - 8	0	0%	3%
medium gravel	8 - 11.3	1	1%	4%
medium gravel	11.3 - 16	1	1%	5%
coarse gravel	16 - 22.6	5	5%	10%
coarse gravel	22.6 - 32	3	3%	13%
very coarse gravel	32 - 45	6	6%	19%
very coarse gravel	45 - 64	2	2%	21%
small cobble	64 - 90	12	12%	33%
medium cobble	90 - 128	8	8%	41%
large cobble	128 - 180	17	17%	57%
very large cobble	180 - 256	17	17%	74%
small boulder	256 - 362	17	17%	91%
small boulder	362 - 512	7	7%	98%
medium boulder	512 - 1024	2	2%	100%
large boulder	1024 - 2048	0	0%	100%
very large boulder	2048 - 4096	0	0%	100%
bedrock	Bedrock	0	0%	100%

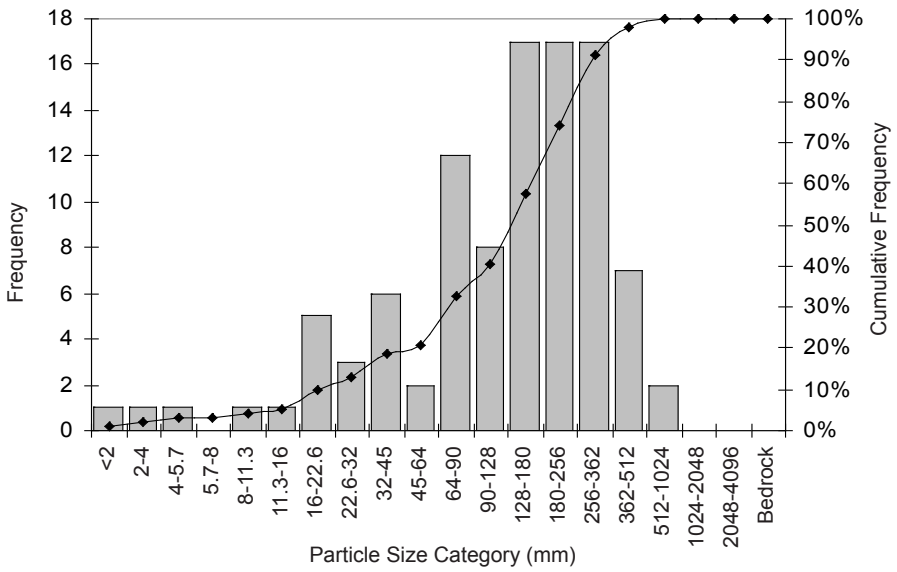

Size Class	Size percent finer than (mm)
D5	20
D16	40
D50	160
D84	340
D95	470
D100	900

Material	Percent Composition
Sand	1%
Gravel	20%
Cobble	53%
Boulder	26%
Bedrock	0%

Sorting Coefficient: 1.46
Skewness Coefficient: 0.31

Reach – Downstream Pebble Count

Cross Section: Downstream Reference Reach – Downstream Pebble Count

Material	Size Range (mm)	Count	Item %	Cumulative %
sand	<2	3	3%	3%
very fine gravel	2 - 4	0	0%	3%
fine gravel	4 - 5.7	0	0%	3%
fine gravel	5.7 - 8	0	0%	3%
medium gravel	8 - 11.3	1	1%	4%
medium gravel	11.3 - 16	1	1%	5%
coarse gravel	16 - 22.6	3	3%	8%
coarse gravel	22.6 - 32	10	10%	18%
very coarse gravel	32 - 45	6	6%	24%
very coarse gravel	45 - 64	9	9%	33%
small cobble	64 - 90	25	25%	58%
medium cobble	90 - 128	8	8%	66%
large cobble	128 - 180	20	20%	86%
very large cobble	180 - 256	5	5%	91%
small boulder	256 - 362	6	6%	97%
small boulder	362 - 512	2	2%	99%
medium boulder	512 - 1024	1	1%	100%
large boulder	1024 - 2048	0	0%	100%
very large boulder	2048 - 4096	0	0%	100%
bedrock	> 4096	0	0%	100%

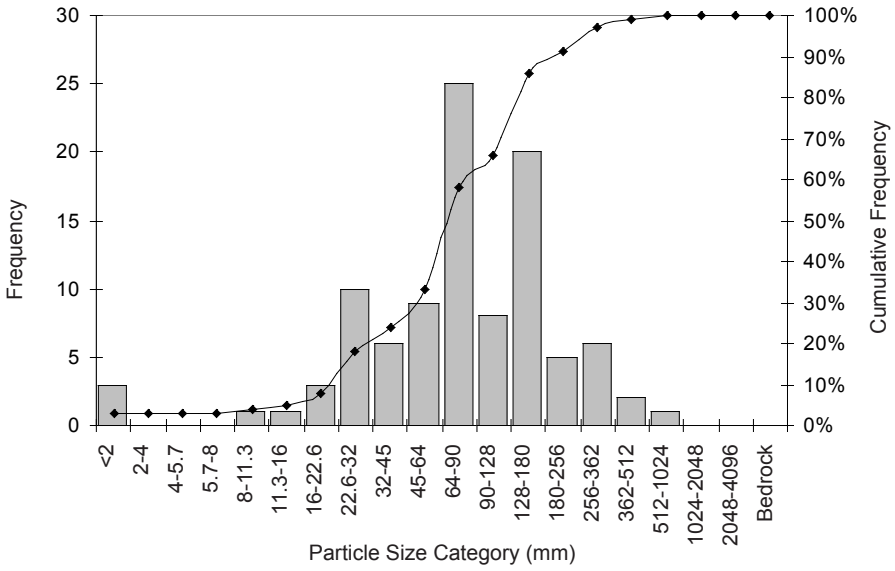

Size Class	Size percent finer than (mm)
D5	19.75
D16	30
D50	82.5
D84	171.6
D95	281
D100	600

Material	Percent Composition
Sand	3%
Gravel	30%
Cobble	58%
Boulder	9%
Bedrock	0%

Sorting Coefficient: 1.21
Skewness Coefficient: 0.12