UPPER EIGHTMILE CREEK

Site Information

Site Location: Mt Hood NF, Forest Road 4430 150 spur. Middle culvert in upper Eightmile Campground area

Year Installed: 2000

Lat/Long: 121°27'21.9"W 45°24'24.7"N

Watershed Area (mi²): 4.1

Stream Slope (ft/ft)[1]: 0.0422

Channel Type: Step-pool

Bankfull Width (ft): 20.5

Survey Date: April 26, 2007

[1]Water surface slope extending up to 20 channel widths up and downstream of crossing.

Culvert Information

Culvert Type: Open-bottom arch

Culvert Material: Annular CMP

Culvert Width: 12 ft

Outlet Type: Mitered

Culvert Length: 42 ft

Inlet Type: Mitered

Pipe Slope (structure slope): 0.047

Culvert Bed Slope: 0.031

(First hydraulic control upstream of inlet to first hydraulic control downstream of outlet.)

Culvert width as a percentage of bankfull width: 0.59

Alignment Conditions: In-line with natural channel.

Bed Conditions: Gravel to large cobble riffle in culvert – plane-bed. Coarse material. Angular material in culvert. Some may be recruited from riprap at culvert inlet.

Pipe Condition: Good condition.

Hydrology

Discharge (cfs) for indicated recurrence interval

25% 2-yr	Q_{bf}[2]	2-year	5-year	10-year	50-year	100-year
43	50	171	237	285	406	460

[2]Bankfull flow estimated by matching modeled water surface elevations to field-identified bankfull elevations.

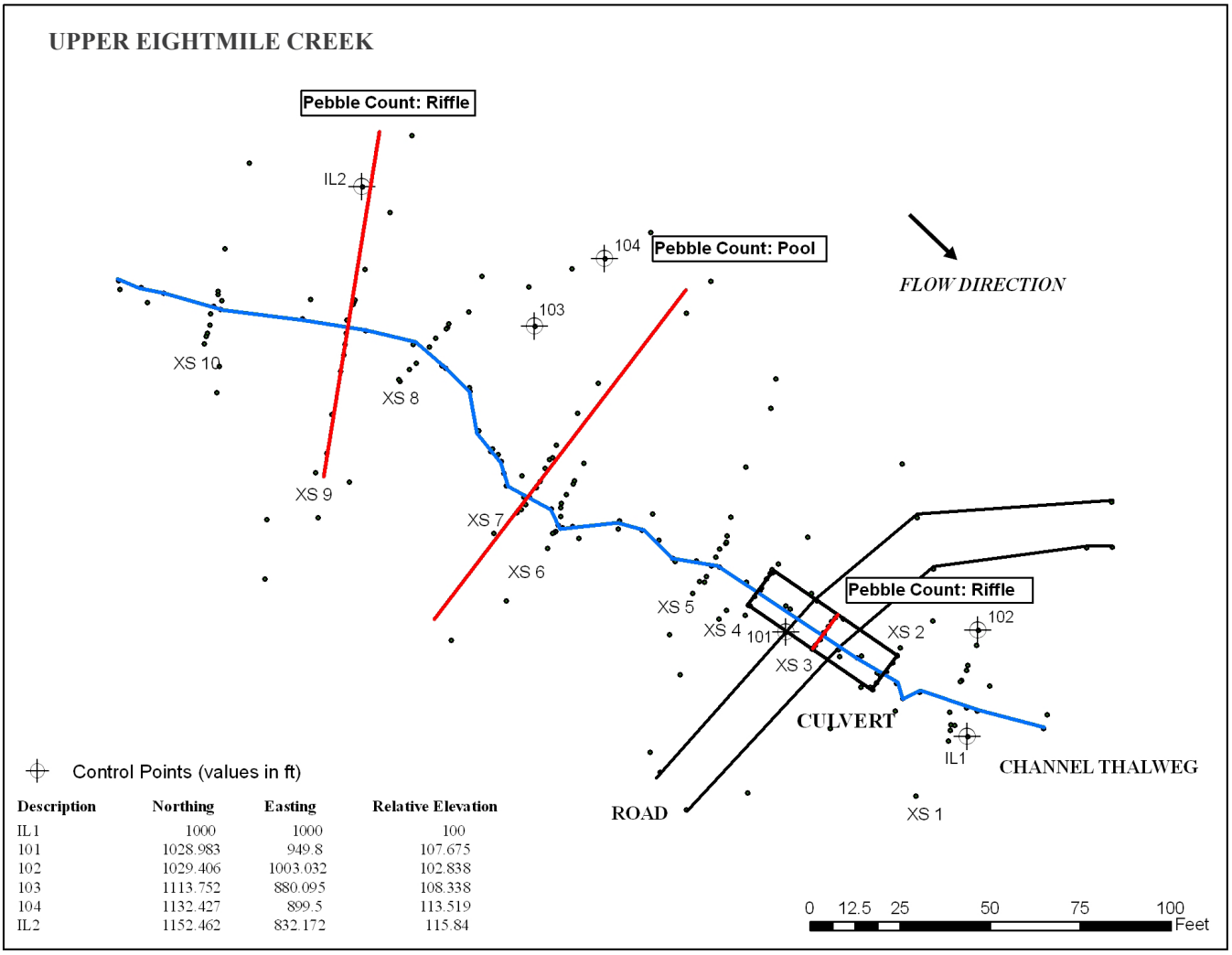

Description	Northing	Easting	Relative Elevation
IL1	1000	1000	100
101	1028.983	949.8	107.675
102	1029.406	1003.032	102.838
103	1113.752	880.095	108.338
104	1132.427	899.5	113.519
IL2	1152.462	832.172	115.84

Points represent survey points

Figure 1. Plan view map.

HISTORY

There is no information available for site history.

SITE DESCRIPTION

The Upper Eightmile culvert is a bottomless arch culvert that is mitered to the slope of the road fill. The culvert width is only 59 percent of the bankfull width of the stream. Inside the culvert is a plane-bed channel that is well-graded with coarse, angular material. At the outlet, the channel drops off into a pool dammed by an artificial structure roughly 50 feet downstream of the culvert. This structure appears to be made up of material that is too small to remain in place during large flows.

The upstream representative reach contains a low active flood plain (3- to 4-channel widths) with large cedar trees along both banks. A series of wood jams account for most of the drop in grade through the reach. Backwater pools and riffles are interspersed between the jams. Wood provides for much of the stability in the reach. Fines have accumulated in the backwater pools. At the downstream boundary of the upstream reach, the channel drops through a steep riffle before flattening out again as it enters the culvert.

SURVEY SUMMARY

Ten cross sections and a longitudinal profile were surveyed along Upper Eightmile Creek in April 2007 to characterize the culvert and an upstream reference reach. Downstream of the culvert, regularly spaced engineered stream structures affected the channel prohibiting the establishment of a downstream representative reach.

Only one reference section was taken halfway through the culvert due to the uniformity of the bed. Two additional cross sections were surveyed upstream to characterize the inlet as well as the contraction of flow. Another two cross sections were surveyed downstream of the culvert to characterize the outlet and the expansion of flow. In the upstream reach, representative cross sections were taken through a pool and a riffle. An additional two sections were taken to characterize the upstream and downstream ends of the reach.

PROFILE ANALYSIS SEGMENT SUMMARY

The profile analysis resulted in a total of eight profile segments. The culvert consisted of one profile segment. This segment extends just above the inlet. The culvert segment was comparable to two representative profile segments in the upstream channel. The downstream transition segment was comparable to the same two representative segments. There was no suitable comparison segment for the upstream transition segment. See figure 2 and table 1.

SCOUR CONDITIONS

Observed conditions

Footing scour – There was no observed scour undermining footings or threatening structure integrity. At time of survey, flow extended across entire bed of culvert.

Culvert bed adjustment – The culvert bed slope has adjusted to a flatter slope since construction (assuming the culvert bed was originally constructed at the same gradient as the structure). Angular cobbles and small boulders are present in the culvert bed. These were either placed there or have been recruited from the riprap banks at the inlet and outlet. Fines and small gravels have aggraded inside the culvert.

Profile characteristics – The profile at the crossing has a concave shape that reflects the reduction in slope that begins at the culvert inlet and extends downstream of the outlet. Slope is partly controlled by a constructed step of large cobbles downstream of the outlet; a feature that would likely wash out at high winter flows. There is evidence of incision upstream (steep eroding

banks) that suggests that the new culvert may have been installed below the profile of the original stream. This may have occurred to avoid raising the road prism.

Residual depths – The single culvert residual depth is just below the lower end of the range of the corresponding profile segments (E and G). The single downstream transition residual depth is only a tenth of a foot greater than the greatest residual depth in the corresponding profile segments (E and G) but is below the deepest residual depth in the natural channel (figure 21).

Substrate – Bed-material distributions in the natural channel have a greater proportion of fine material (sand and small gravels) than the culvert and are more poorly sorted than the culvert. Inside the culvert is a very plane-bed channel with coarse angular material.

Predicted conditions

Cross-section characteristics – The culvert has a dramatic effect on cross-section characteristics at nearly all flows, but particularly at flows exceeding bankfull (figures 5 through 9 and 12 through 17). For top width (figure 15), the culvert segment shows some widths exceeding the width of the corresponding profile segment at high flows (Q_{50} and Q_{100}). This is because the culvert segment extends upstream of the culvert inlet and the model shows the culvert inlet backwatering flow at these high flows. Relationships are similar between the downstream transition segment and the natural channel, except for maximum depth, which is within the range of the natural channel.

Shear stress – Most of the shear-stress values in the culvert are similar to corresponding profile segment G, except for at high flows (Q_2 and above) where the maximum shear in the culvert is greater than the maximum shear in the natural channel (figure 19). Shear stress in the downstream transition segment is greater than the natural channel at the Q_{10} and greater.

Excess shear – The culvert excess shear is about half that of the excess shear in the upstream channel (figure 20). This is mainly due to differences in the D_{50}s of these cross sections. The greater D_{50} in the culvert results in a higher critical shear stress due to the accounting for less particle protrusion of the D_{84}, which is similar between the sections.

Velocity – Velocities in the culvert and the downstream transition segments are greater than the corresponding channel segments above the Q_{bf} (figure 18).

Scour summary

There was no significant scour that was observed in the culvert but cross-section characteristics indicate severe changes to flow characteristics and inadequate culvert capacity that may cause the culvert to flow under outlet control conditions at high flood flows, which the culvert has not yet experienced. Although most shear-stress values in the culvert were within the range of channel conditions, the maximum shear at high flows was greater than in the natural channel. The location of the maximum shear estimated by the model (see figure 10) is just downstream of the cross section where excess shear was calculated and therefore the excess shear analysis may not accurately reflect the future potential for scour in the culvert.

There is evidence of incision upstream that suggests that the new culvert was installed below the profile of the original stream. This may have occurred to avoid raising the road prism.

AOP CONDITIONS

Cross-section complexity – The sum of squared height difference in the culvert cross section is greater than that found in the natural channel (table 3).

Profile complexity – Vertical sinuosity in the culvert is slightly less than that found in corresponding slope segments (table 4). Vertical sinuosity in the downstream transition is the same as that found in corresponding slope segments.

Depth distribution – There is significantly less channel margin habitat in the culvert compared to the channel at the 25 percent Q_2 (table 5).

Habitat units – The culvert is 100-percent riffle, whereas the natural channel has 24-percent pool habitat (table 6).

Residual depths – The single culvert residual depth is just below the lower end of the range of the corresponding profile segments (E and G). The single downstream transition residual depth is only a tenth of a foot greater than the greatest residual depth in the corresponding profile segments (E and G) but is below the deepest residual depth in the natural channel (figure 21).

Bed material – Bed-material distributions in the natural channel have a greater proportion of fine material (sand and small gravels) than the culvert and are more poorly sorted than the culvert. Inside the culvert is a very plane-bed channel with coarse angular material.

Large woody debris – There was no LWD present in the culvert (table 8). The representative channel had very high LWD abundance. LWD formed steps and scour pools in the channel outside the crossing and played a primary role in habitat unit creation and complexity. Features in the culvert did not mimic the role of wood in the natural channel.

AOP summary

The flow in the culvert was wall-to-wall at the time of the survey, suggesting a lack of flow concentration that may impede passage during low flow periods. The depth distribution analysis suggests that at higher flows (25 percent Q_2) shallow channel margin habitat may be unavailable to assist fish passage. There are no channel banks to allow passage of terrestrial organisms.

DESIGN CONSIDERATIONS

The culvert placed at this site is undersized to effectively convey flows without significant impacts to flow geometry and culvert scour. No significant scour was observed during the survey but the site is a relatively recent installation and has likely not yet experienced flows greater than a 5- or 10-year event. The limited capacity may create outlet control conditions at high flows, with the flow passing through critical depth within the pipe, which may result in future scour of the culvert bed. The culvert was calculated as being only 59 percent of the bankfull width of the stream. A wider culvert at this site would improve conveyance and reduce scour risk. The installation may also have benefited from being at a higher elevation along the profile, thus reducing what appears to be channel incision in the channel upstream of the inlet. The pipe may have been installed low because of limitations imposed by the height of the road surface.

The plane-bed channel and wall-to-wall flow in the culvert may impede fish passage at low flows due to a lack of flow concentration (i.e., too shallow flow) and at higher flows due to a lack of shallow channel-margin habitat or large roughness elements (e.g., boulders) that can provide velocity refuge. A wider culvert and the construction of channel banks within the culvert would help to concentrate flows for low flow passage, create bars that would provide shallow habitat for passage at higher flows, and would provide low flow passage along the banks for terrestrial organisms.

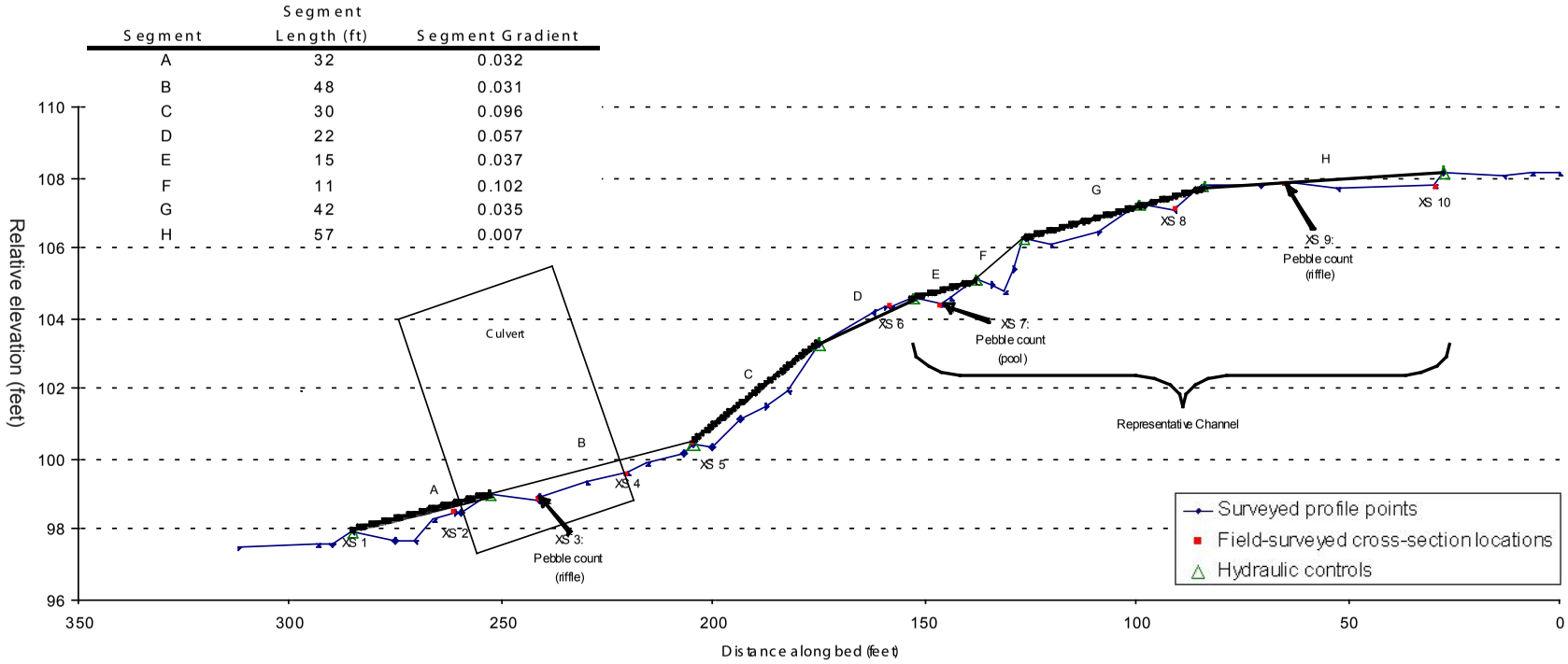

Figure 2—Upper Eightmile Creek longitudinal profile.

Table 1—Segment comparisons

Culvert Segment	Representative Channel Segment	% Difference in Gradient
B	E	16.6%
B	G	11.8%
Downstream Transition		
A	E	14.5%
A	G	9.6%

Table 2—Summary of segments used for comparisons

Segment	Range of Manning's n values[1]	# of measured XSs	# of interpolated XSs
A	0.0875 – 0.0909	2	3
B	0.0845 – 0.1578	3	5
E	0.0951 – 0.1224	1	2
G	0.0947 – 0.1003	1	5

1Obtained using equation from Jarrett (1984): n = 0.39S0.38R-0.16, where S=stream slope; R=hydraulic radius. Jarrett's equation only applied within the following ranges: S = 0.002 to 0.08, R = 0.5 ft to 7 ft. For cross section s outside these ranges, n was computed either from adjacent sections that fell within the ranges, using the guidance of Arcement and Schneider (1987), or from the HEC-RAS recommendations for culvert modeling.

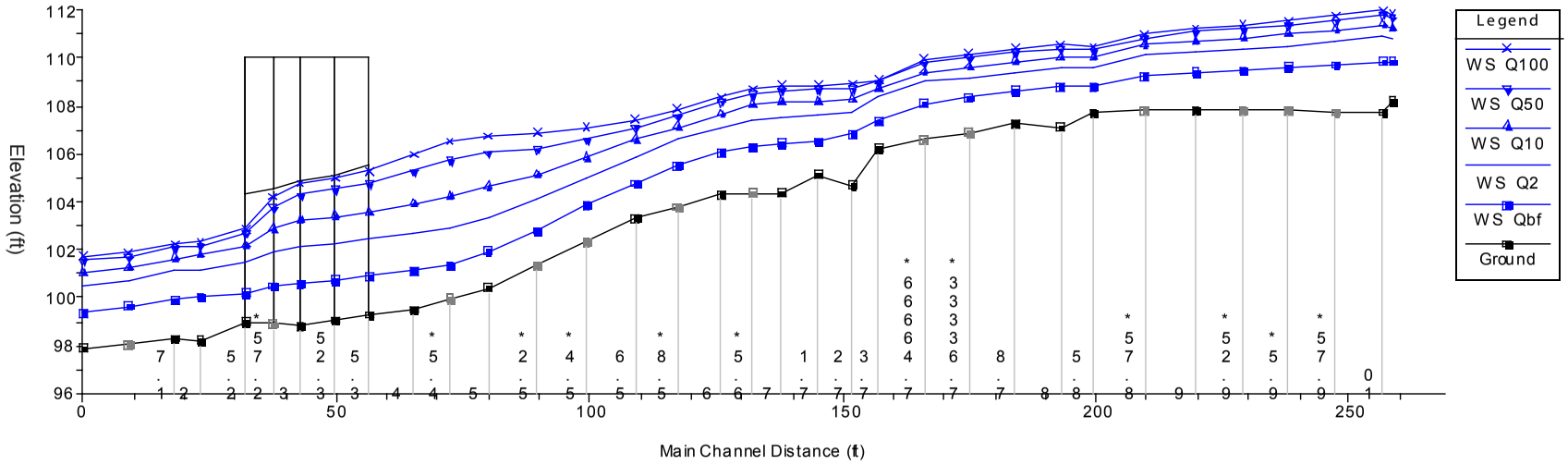

Stations with decimal values are interpolated cross sections placed along the surveyed profile.

Figure 3—HEC-RAS profile.

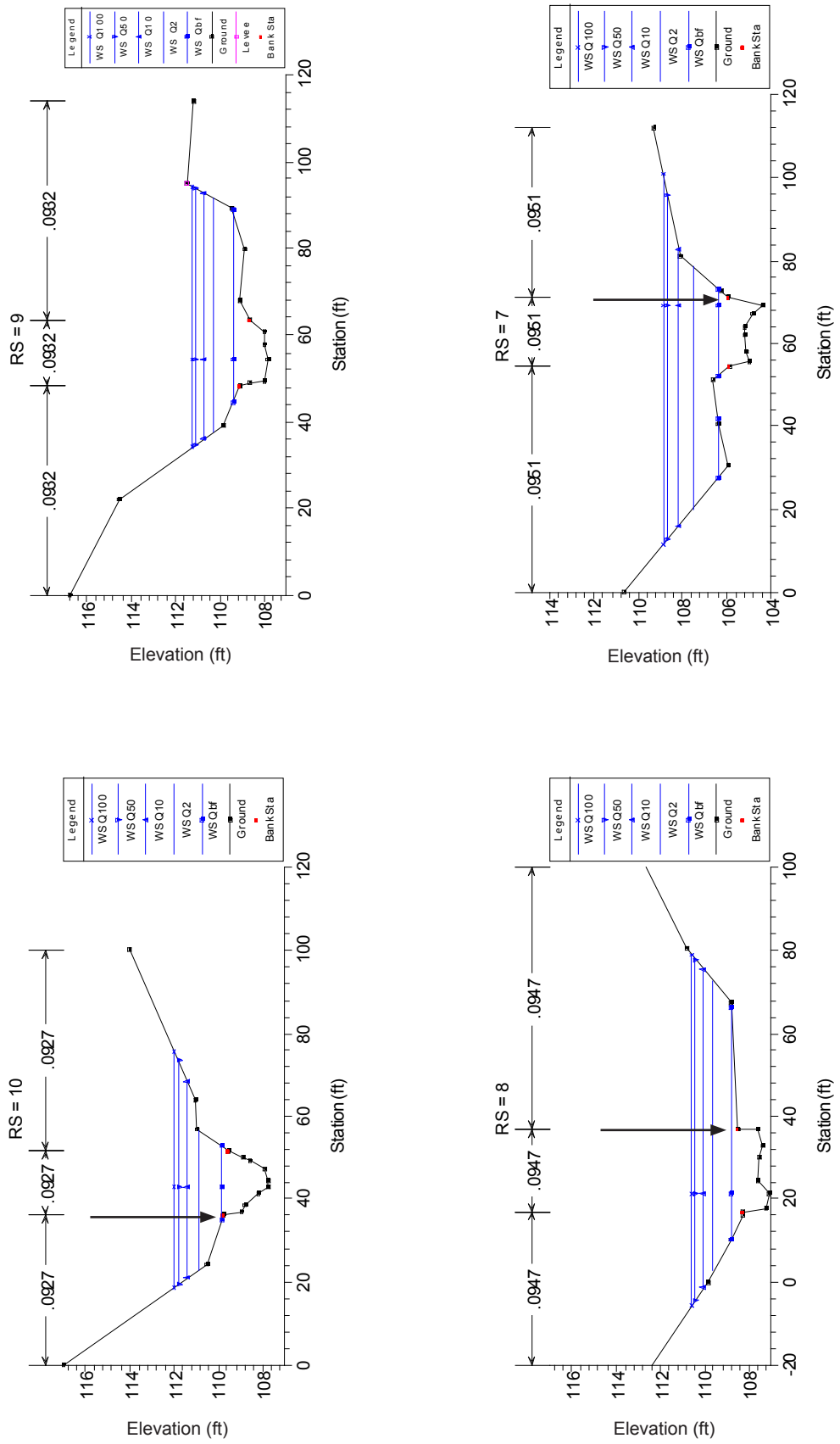

Figure 4—Cross-section plots. Only measured cross section s are included. Manning's n values are included at the top of the cross section. The stationing (RS) corresponds to the stationing on the HEC-RAS profile. Green arrows define the ineffective flow areas. Black arrows represent points identified in the field as the bankfull channel boundary. Only those points identified in the field and supported by hydraulic and topographic analyses are shown below.

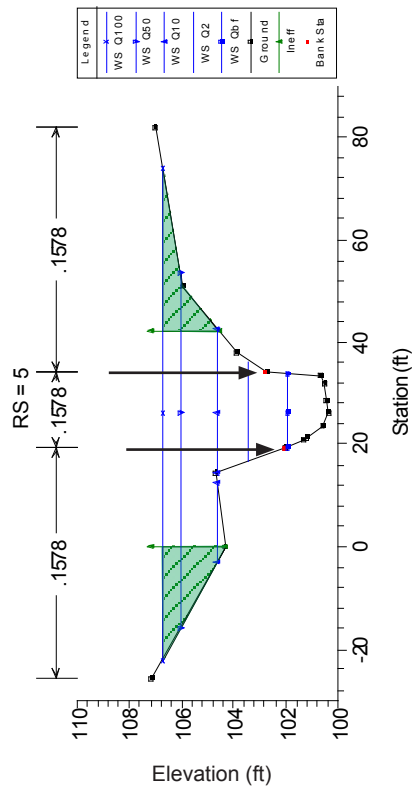

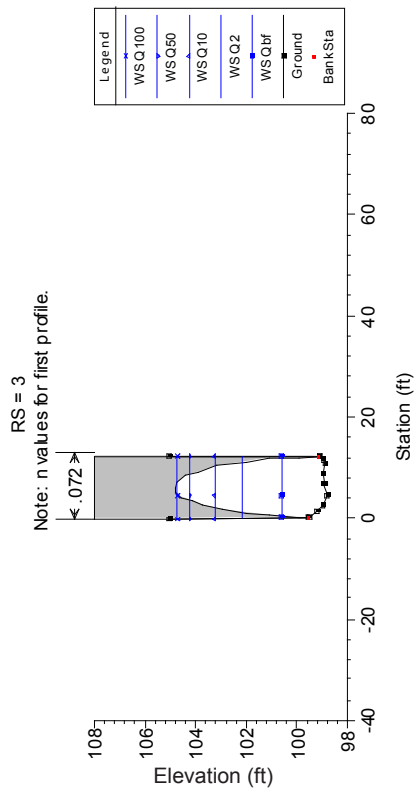

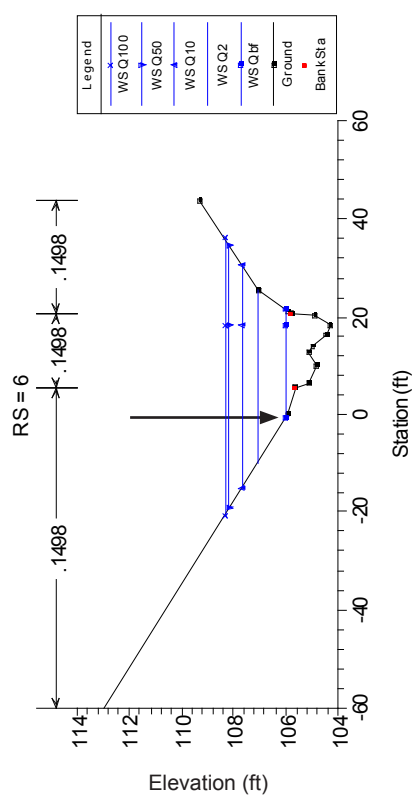

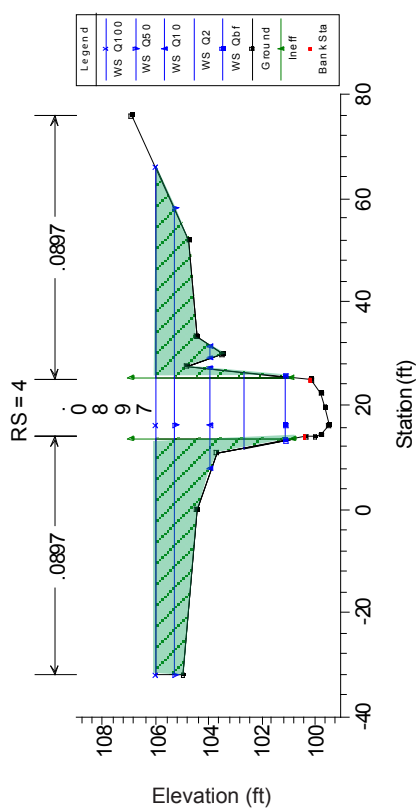

Figure 4—Cross-section plots. Only measured cross section s are included. Manning's n values are included at the top of the cross section. The stationing (RS) corresponds to the stationing on the HEC-RAS profile. Green arrows define the ineffective flow areas. Black arrows represent points identified in the field as the bankfull channel boundary. Only those points identified in the field and supported by hydraulic and topographic analyses are shown below. (continued)

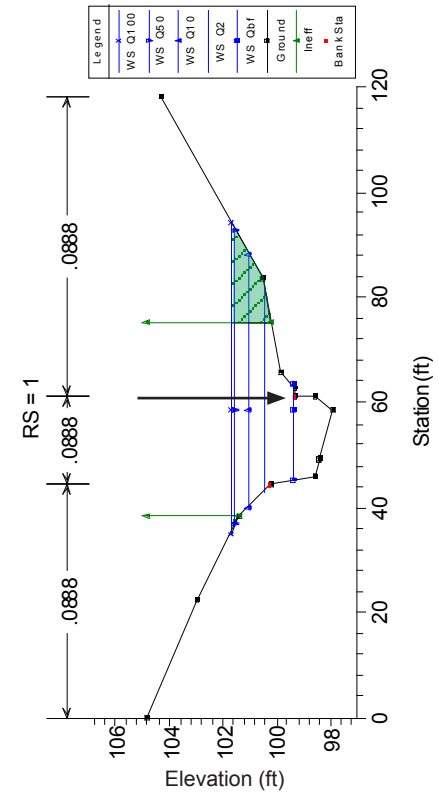

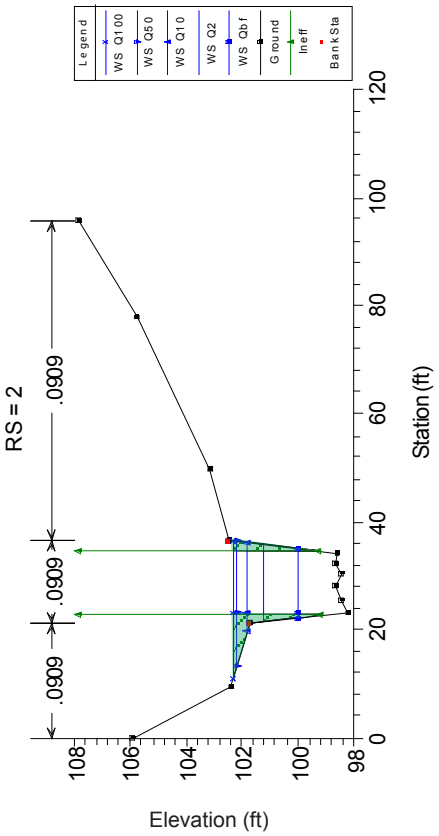

Figure 4—Cross-section plots. Only measured cross section s are included. Manning's n values are included at the top of the cross section. The stationing (RS) corresponds to the stationing on the HEC-RAS profile. Green arrows define the ineffective flow areas. Black arrows represent points identified in the field as the bankfull channel boundary. Only those points identified in the field and supported by hydraulic and topographic analyses are shown below. (continued)

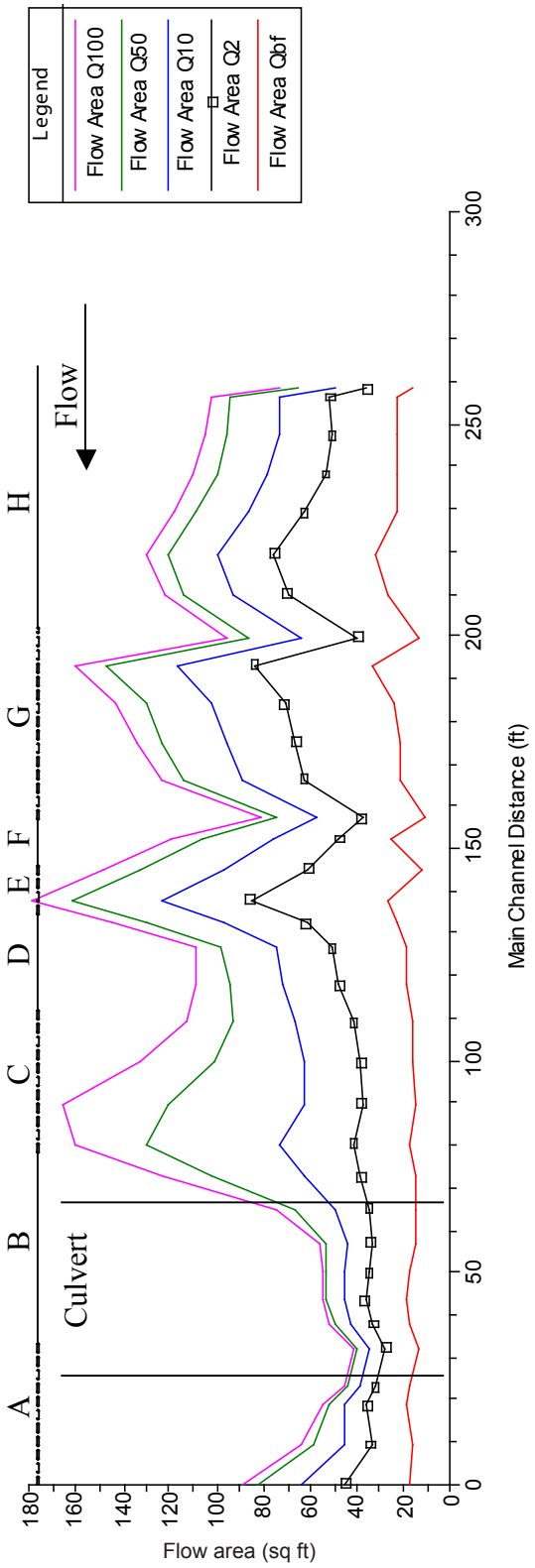

Figure 5—Flow area (total) profile plot.

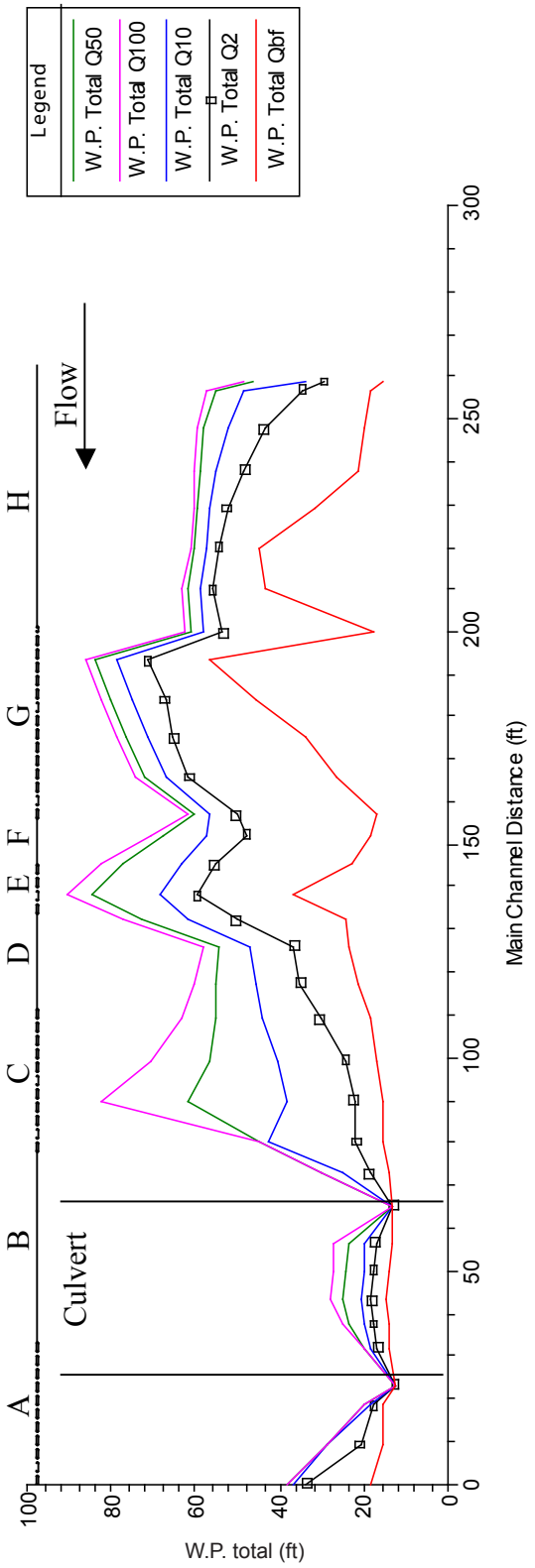

Figure 6—Wetted perimeter.

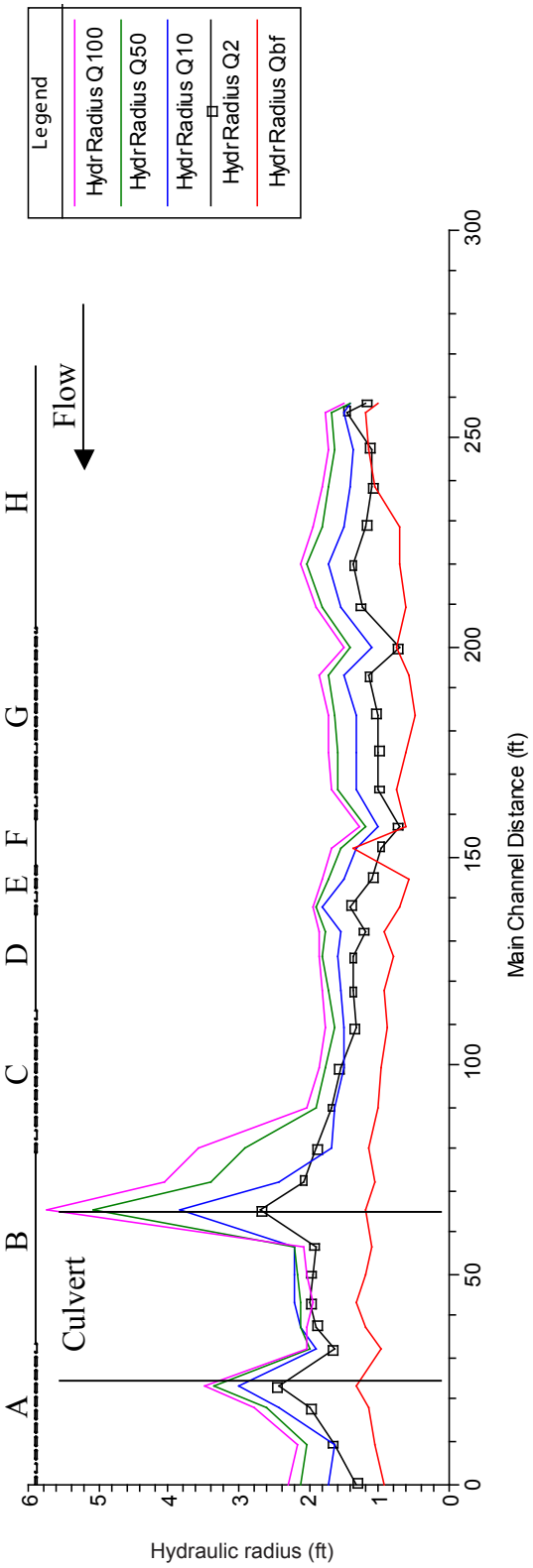

Figure 7—Hydraulic radius.

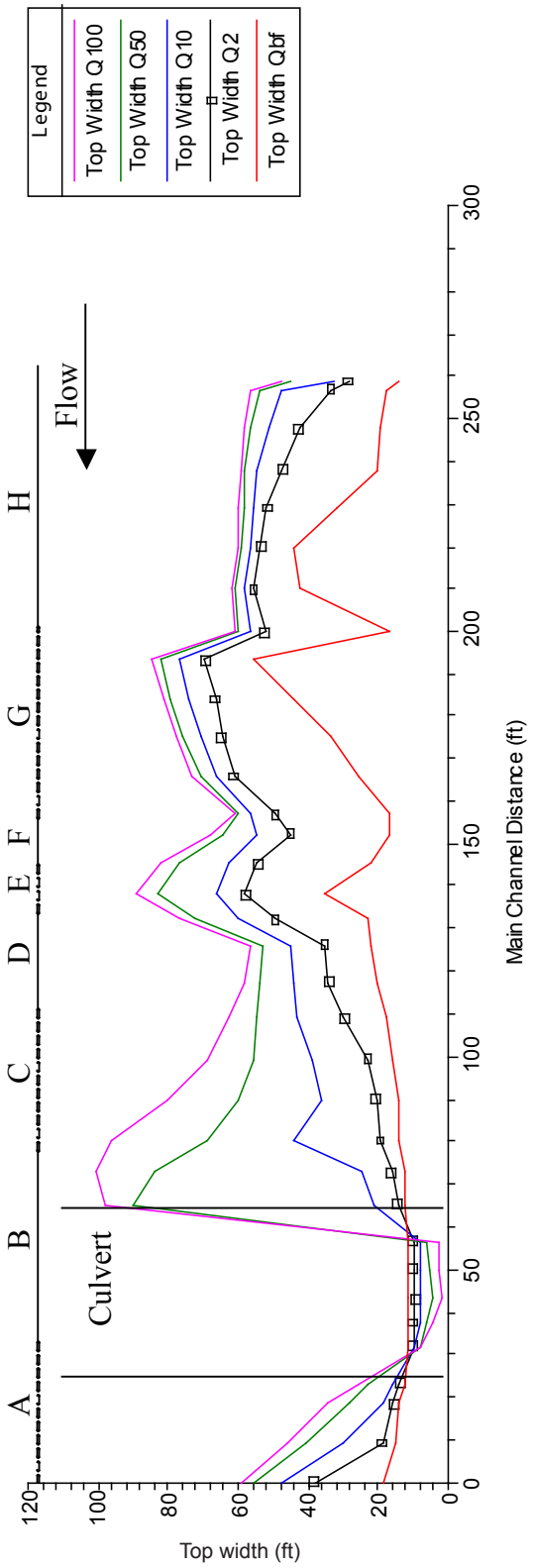

Figure 8—Top width.

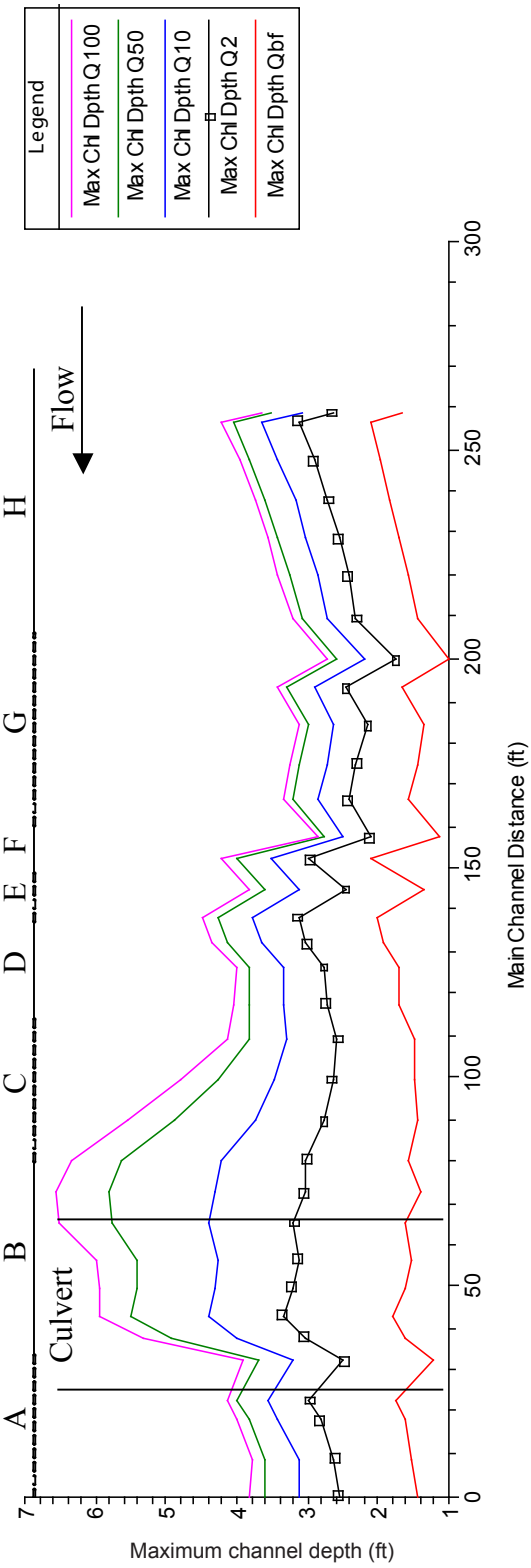

Figure 9—Maximum depth.

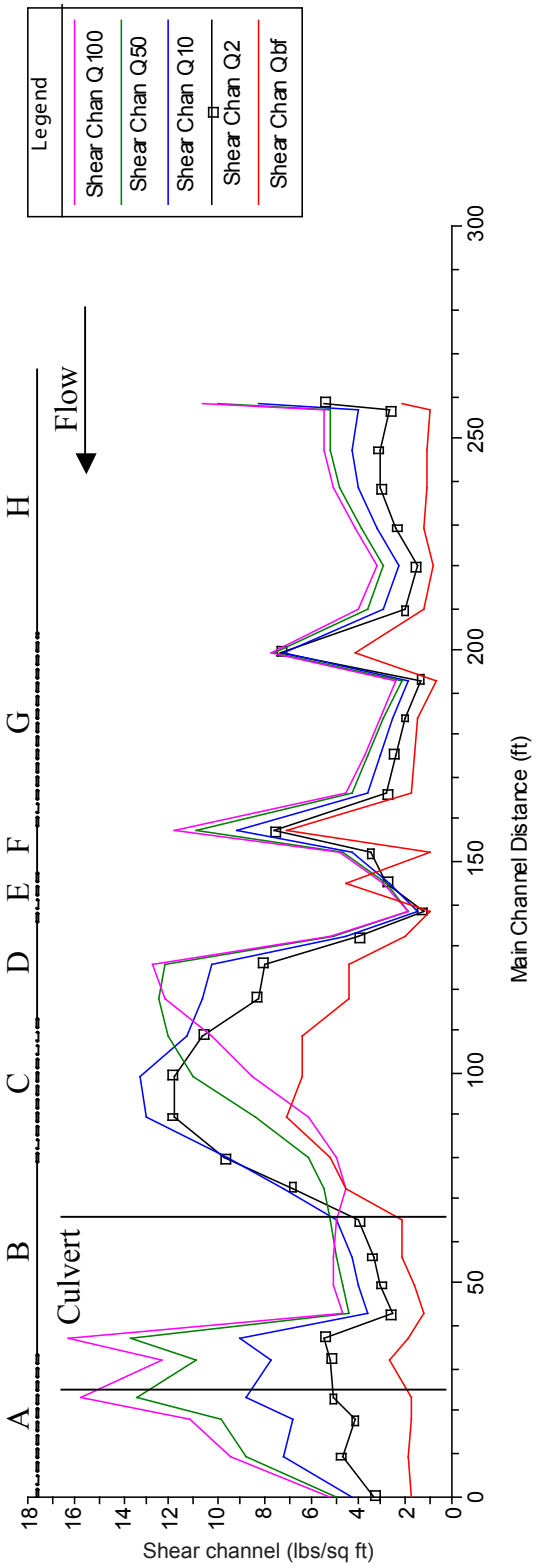

Figure 10—Shear stress (channel) profile.

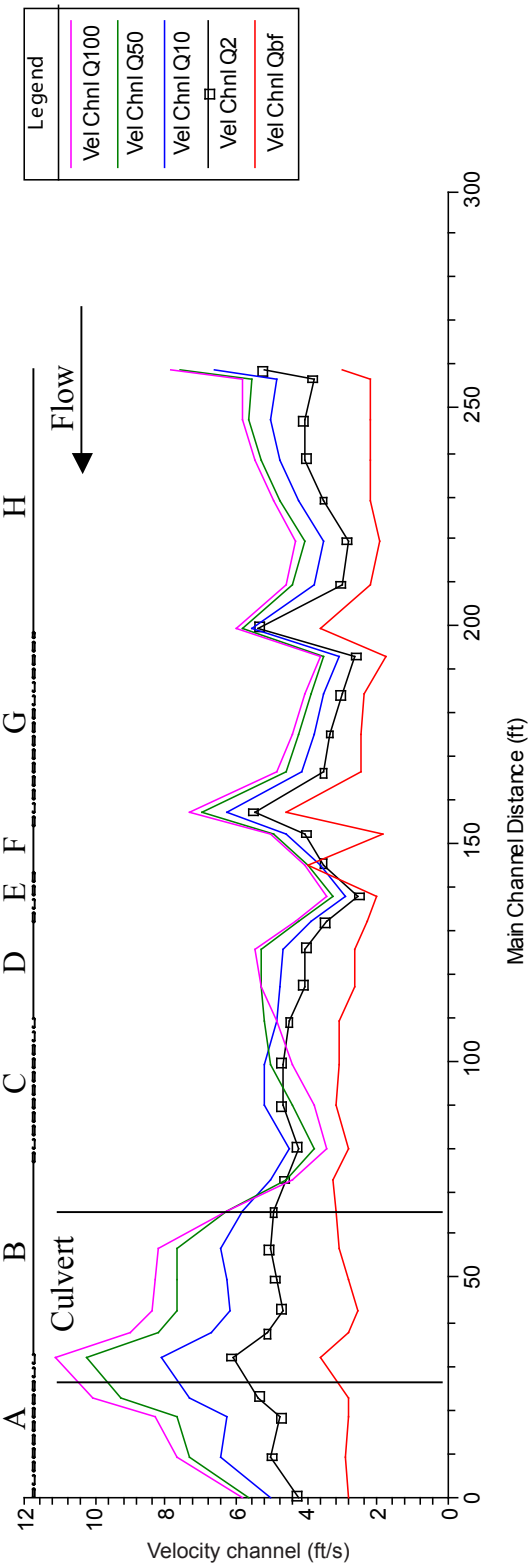

Figure 11—Velocity (channel) profile plot.

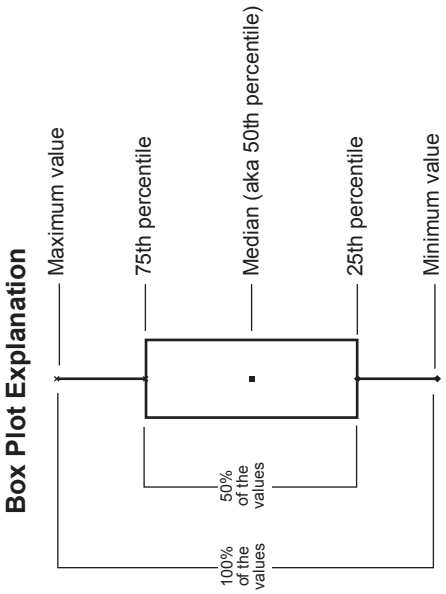

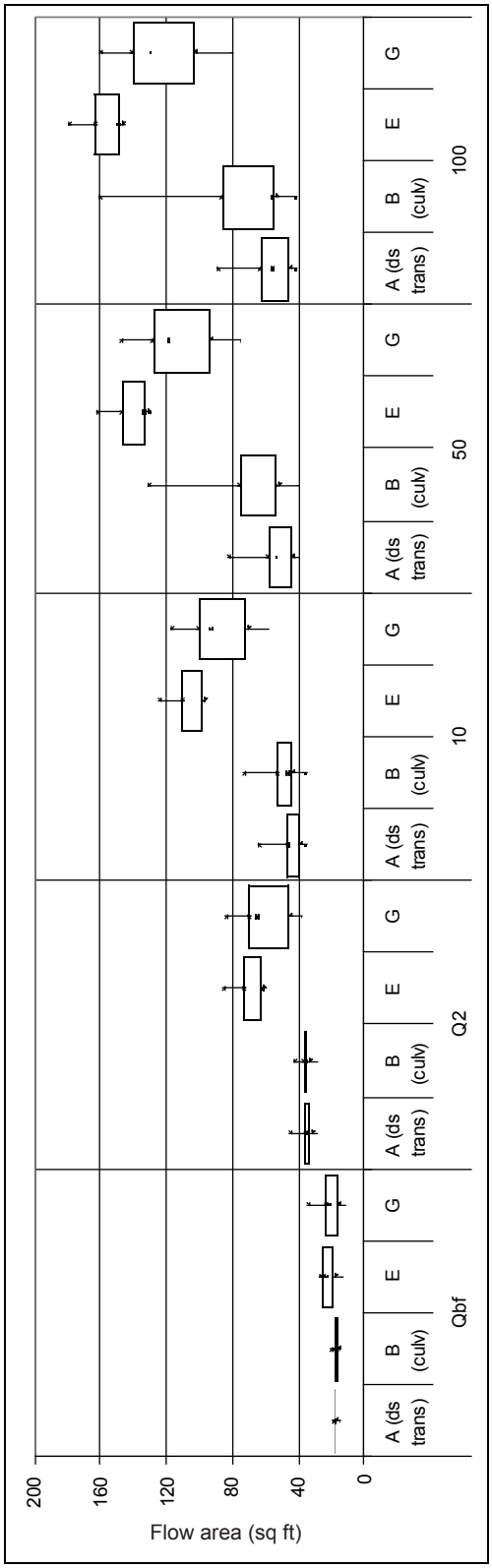

Figure 12—Flow area (total).

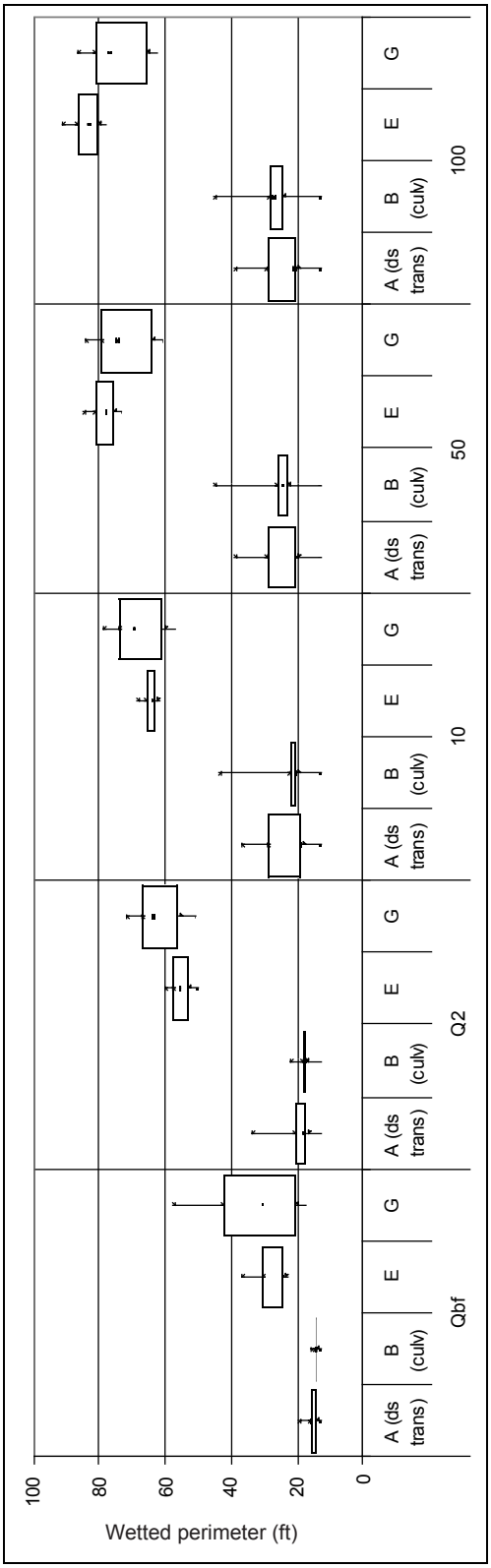

Figure 13—Wetted perimeter.

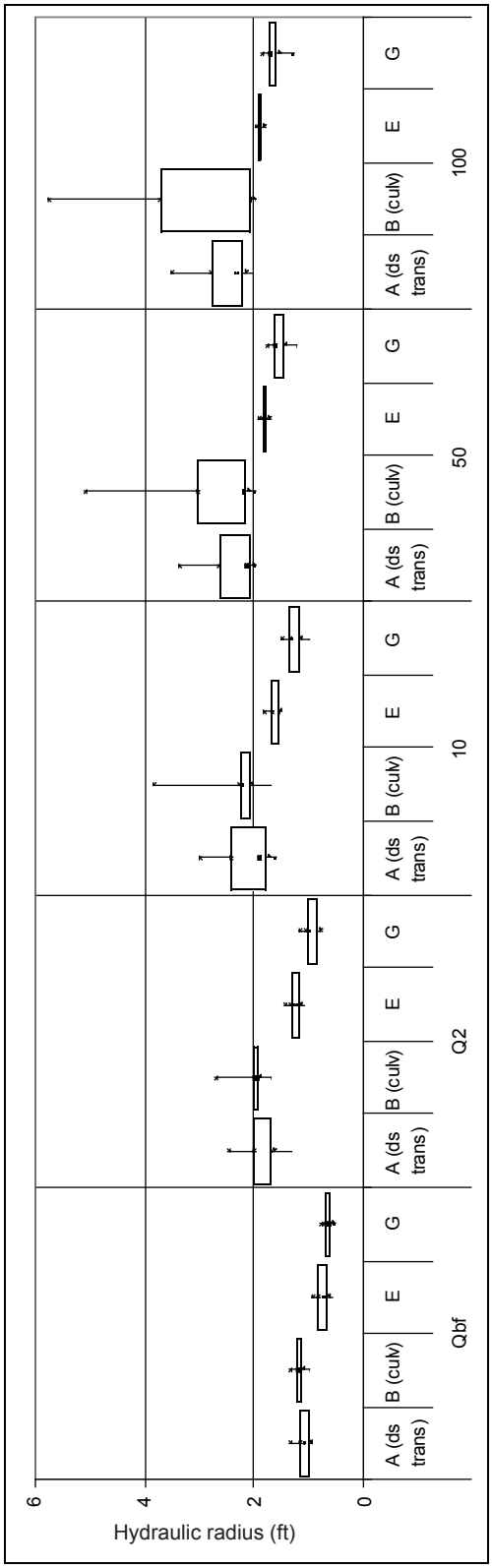

Figure 14—Hydraulic radius.

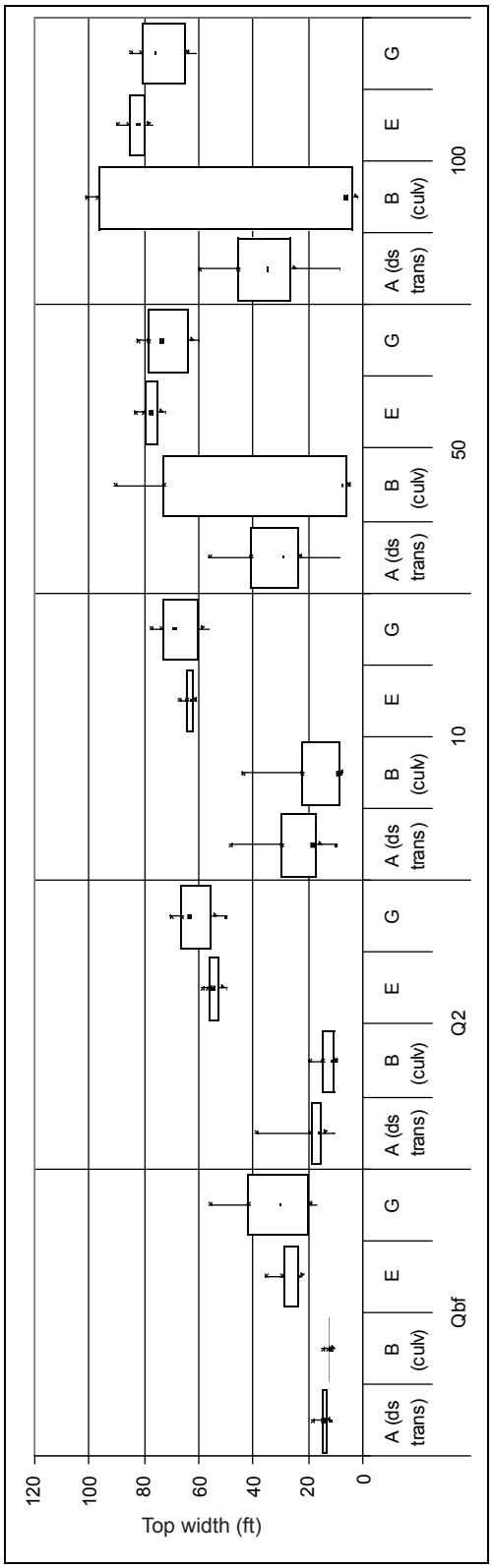

Figure 15—Top width.

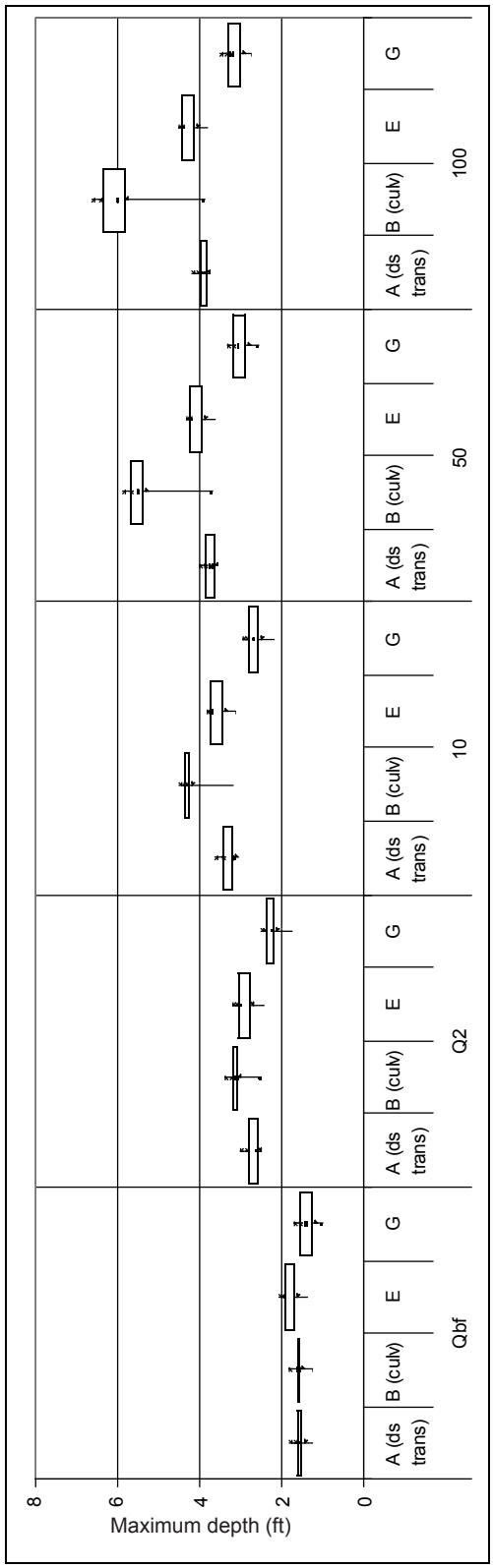

Figure 16—Maximum depth.

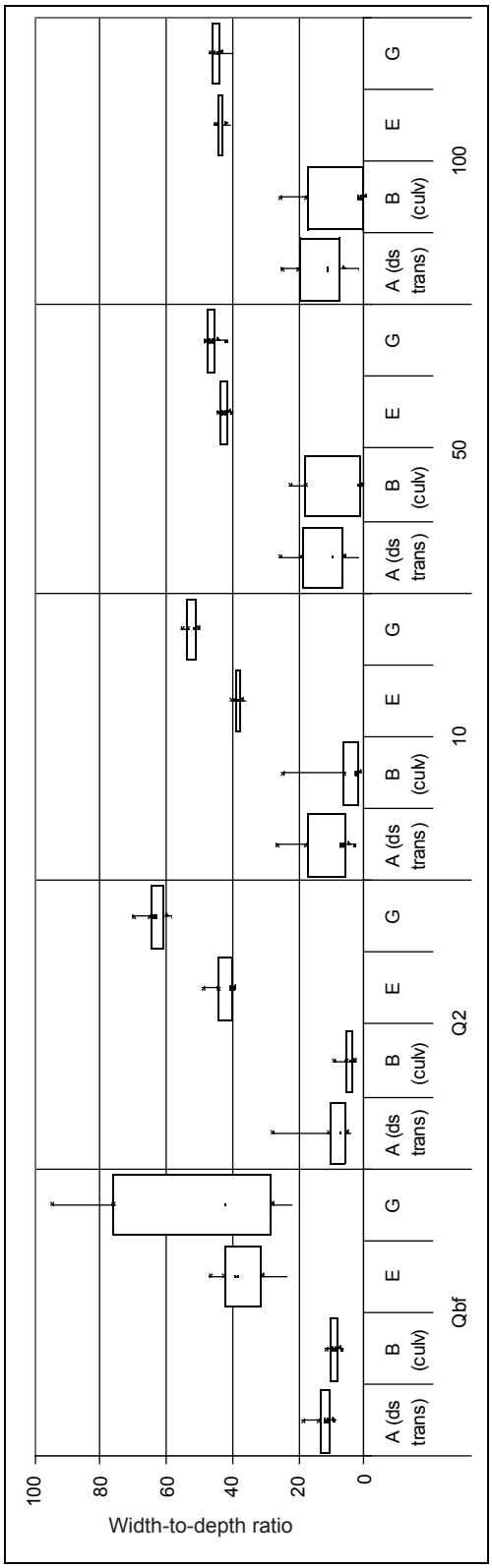

Figure 17—Width-to-depth ratio.

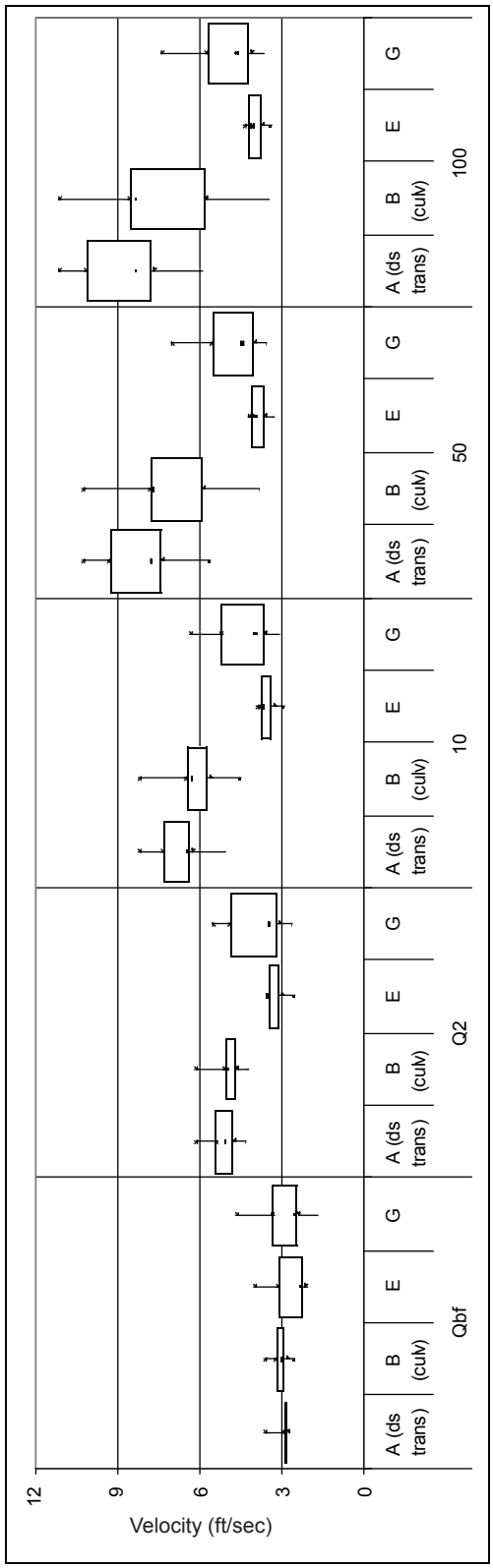

Figure 18—Velocity (channel).

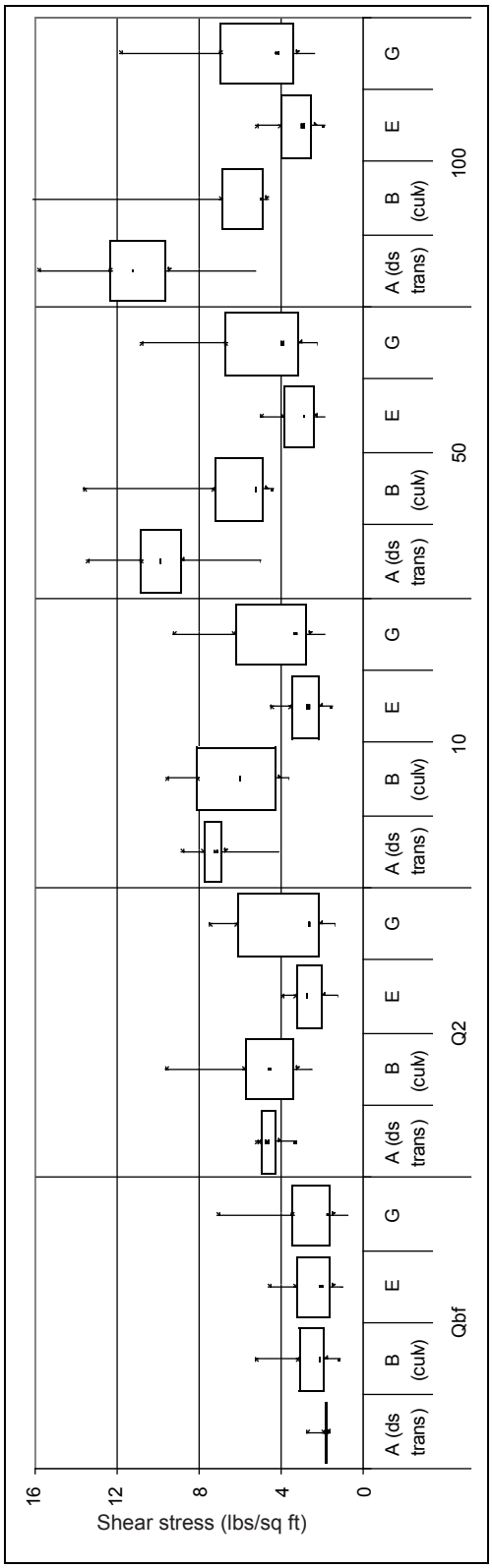

Figure 19—Shear stress (channel).

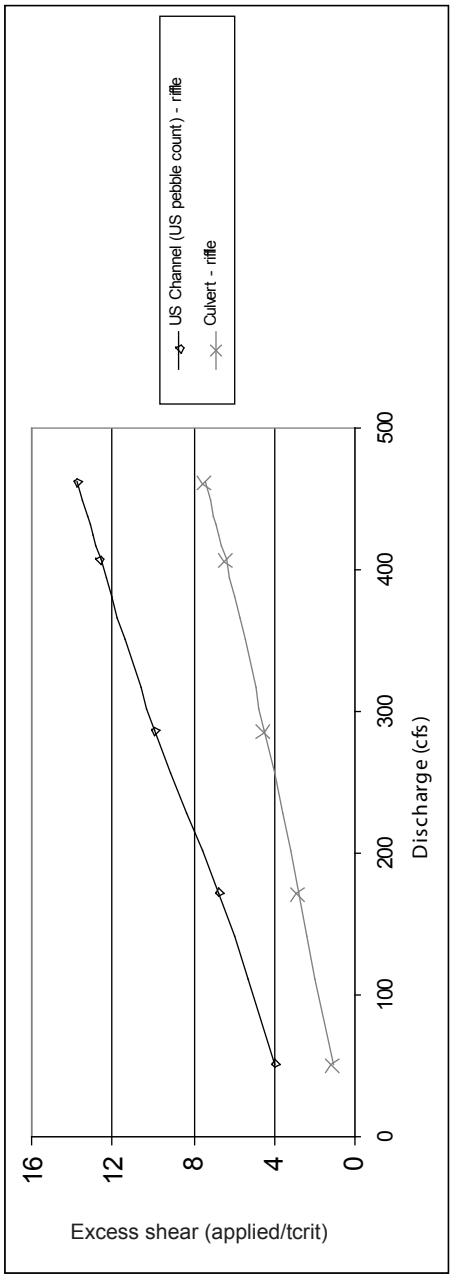

Excess shear stress is the channel shear divided by the critical shear for bed entrainment of the D_{84} particle size. Values of excess shear greater than 1 indicate bed movement for the D_{84} particle size.

Figure 20—Excess shear stress.

Table 3—Sum of squared height difference

Reach	XS Location	Unit type	Sum of squared height difference	Within range of channel conditions?
Culvert		Riffle	0.03	No
Upstream	US	Riffle	0.002	
	DS	Pool	0.02	

Table 4—Vertical sinuosity

Segment	Location	Vertical Sinuosity (ft/ft)
A	DS transition	1.002
B	Culvert	1.001
C	US transition	1.007
D	US channel	1.002
E	US channel	1.002
F	US channel	1.024
G	US channel	1.002
H	US channel	1.001

Table 5—Depth distribution

Reach	XS Location	25% Q_2	Within range of channel conditions?
Culvert		0	No
Upstream	US	39	
	DS	23	

Reach	Percent of surface area			
	Pool	Glide	Riffle	Step
Culvert	0%	0%	100%	0%
Upstream Channel	24%	0%	74%	2%

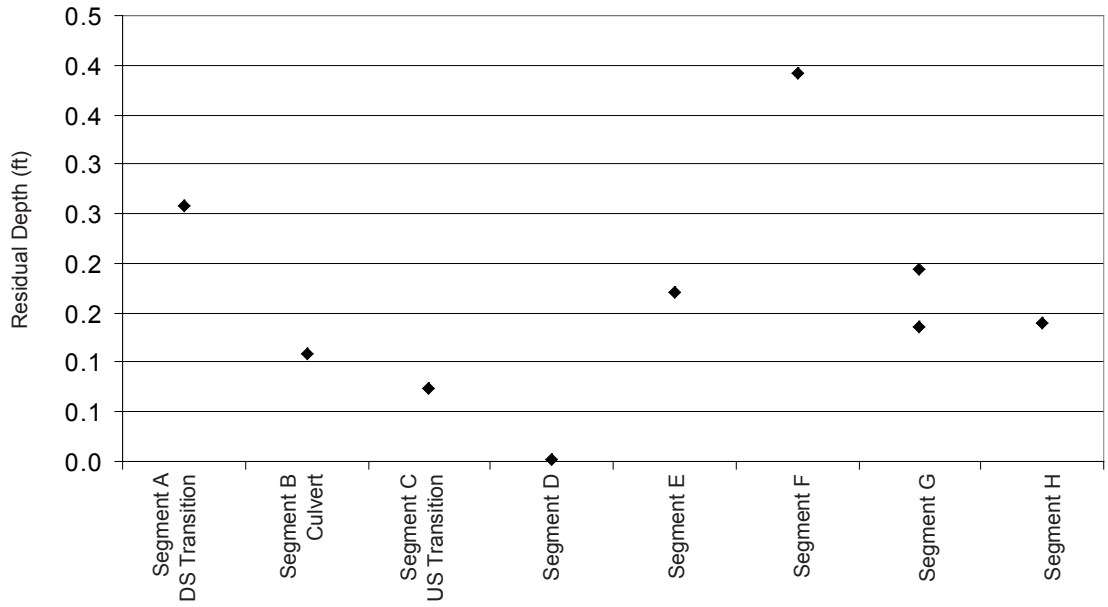

Figure 21—Residual depths.

Table 7—Bed material sorting and skewness

Reach	XS Location	Unit Type	Sorting	Within range of channel conditions?	Skewness	Within range of channel conditions?
Culvert		Riffle	1.27	No	0.23	No
Upstream	US	Riffle	2.82		-0.15	
	DS	Pool	1.57		0.19	

Table 8—Large woody debris

Reach	Pieces/Channel Width
Culvert	0
Upstream	6.4

Terminology:

US = Upstream

DS = Downstream

RR = Reference reach

XS = Cross section

View upstream through culvert.

View downstream of culvert inlet.

Upstream reference reach – upstream pebble count, riffle.

Upstream reference reach – downstream pebble count, pool.

View upstream from inlet. Moderate incision can be seen in upstream channel.

View downstream from outlet. Rock step created for grade control.

Cross section : Upstream Reference Reach – Upstream Pebble Count

Material	Size Class (mm)	Count	Item %	Cumulative %
sand	<2	39	39%	39%
very fine gravel	2 - 4	4	4%	43%
fine gravel	4 - 5.7	2	2%	45%
fine gravel	5.7 - 8	6	6%	52%
medium gravel	8 - 11.3	3	3%	55%
medium gravel	11.3 - 16	6	6%	61%
coarse gravel	16 - 22.6	7	7%	68%
coarse gravel	22.6 - 32	1	1%	69%
very coarse gravel	32 - 45	5	5%	74%
very coarse gravel	45 - 64	2	2%	76%
small cobble	64 - 90	5	5%	81%
medium cobble	90 - 128	5	5%	86%
large cobble	128 - 180	11	11%	97%
very large cobble	180 - 256	3	3%	100%
small boulder	256 - 362	0	0%	100%
small boulder	362 - 512	0	0%	100%
medium boulder	512 - 1024	0	0%	100%
large boulder	1024 - 2048	0	0%	100%
very large boulder	2048 - 4096	0	0%	100%
bedrock	Bedrock	0	0%	100%

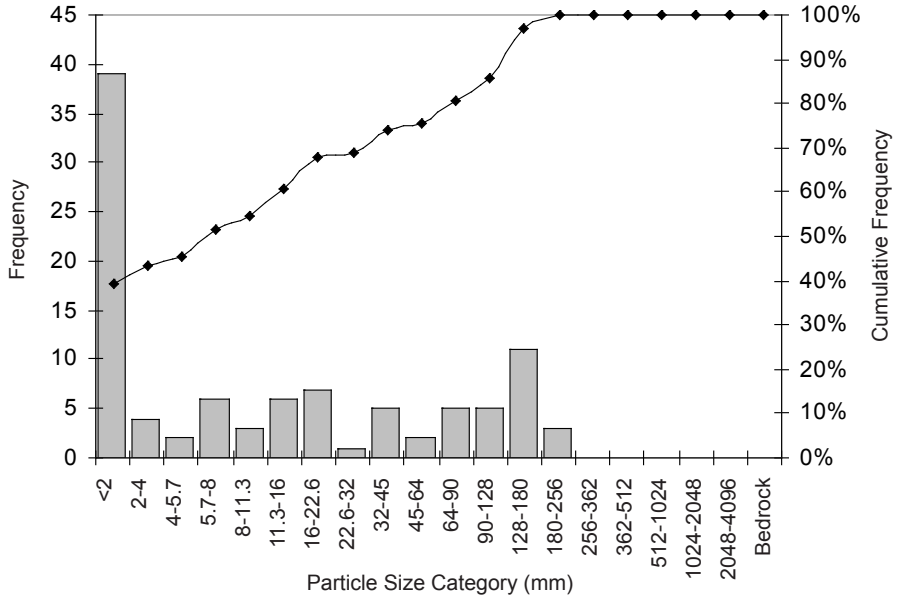

Size Class	Size percent finer than (mm)
D5	1
D16	1
D50	8
D84	120
D95	151
D100	200

Material	Percent Composition
Sand	39%
Gravel	36%
Cobble	24%
Boulder	0%
Bedrock	0%

Sorting Coefficient: 2.82
Skewness Coefficient: -0.15

Cross section : Upstream Reference Reach – Downstream Pebble Count

Material	Size Class (mm)	Count	Item %	Cumulative %
sand	<2	15	15%	15%
very fine gravel	2 - 4	9	9%	24%
fine gravel	4 - 5.7	6	6%	30%
fine gravel	5.7 - 8	13	13%	43%
medium gravel	8 - 11.3	15	15%	57%
medium gravel	11.3 - 16	11	11%	68%
coarse gravel	16 - 22.6	14	14%	82%
coarse gravel	22.6 - 32	8	8%	90%
very coarse gravel	32 - 45	5	5%	95%
very coarse gravel	45 - 64	2	2%	97%
small cobble	64 - 90	3	3%	100%
medium cobble	90 - 128	0	0%	100%
large cobble	128 - 180	0	0%	100%
very large cobble	180 - 256	0	0%	100%
small boulder	256 - 362	0	0%	100%
small boulder	362 - 512	0	0%	100%
medium boulder	512 - 1024	0	0%	100%
large boulder	1024 - 2048	0	0%	100%
very large boulder	2048 - 4096	0	0%	100%
bedrock	Bedrock	0	0%	100%

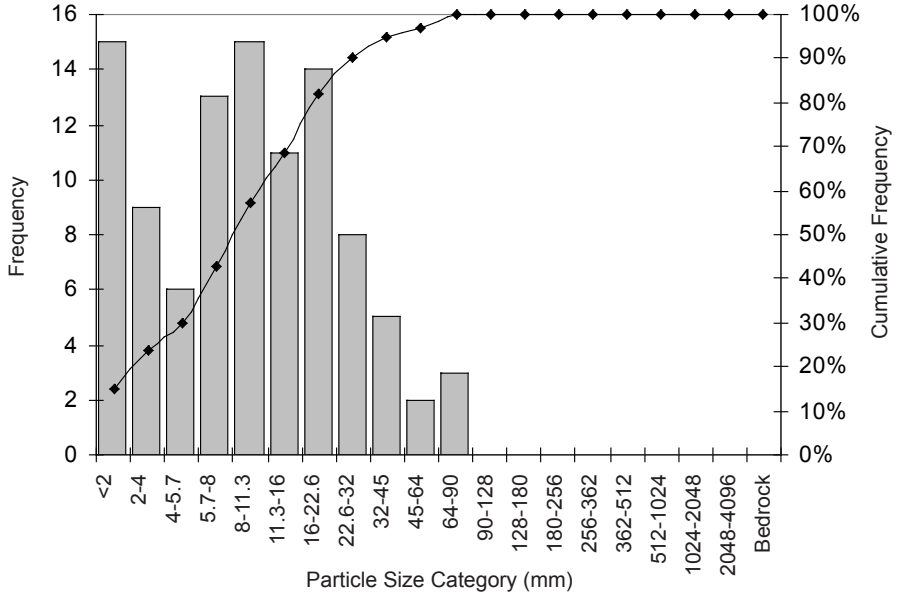

Size Class	Size percent finer than (mm)
D5	1
D16	3
D50	10
D84	25
D95	40
D100	90

Material	Percent Composition
Sand	15%
Gravel	82%
Cobble	3%
Boulder	0%
Bedrock	0%

Sorting Coefficient: 1.57
Skewness Coefficient: 0.19

Cross section : Culvert – Only Pebble Count; Middle of Culvert

Material	Size Range (mm)	Count	Item %	Cumulative %
sand	<2	0	0%	0%
very fine gravel	2 - 4	2	2%	2%
fine gravel	4 - 5.7	1	1%	3%
fine gravel	5.7 - 8	3	3%	6%
medium gravel	8 - 11.3	1	1%	7%
medium gravel	11.3 - 16	2	2%	9%
coarse gravel	16 - 22.6	4	4%	13%
coarse gravel	22.6 - 32	9	9%	22%
very coarse gravel	32 - 45	10	10%	33%
very coarse gravel	45 - 64	17	17%	50%
small cobble	64 - 90	17	17%	67%
medium cobble	90 - 128	14	14%	82%
large cobble	128 - 180	12	12%	94%
very large cobble	180 - 256	4	4%	98%
small boulder	256 - 362	2	2%	100%
small boulder	362 - 512	0	0%	100%
medium boulder	512 - 1024	0	0%	100%
large boulder	1024 - 2048	0	0%	100%
very large boulder	2048 - 4096	0	0%	100%
bedrock	> 4096	0	0%	100%

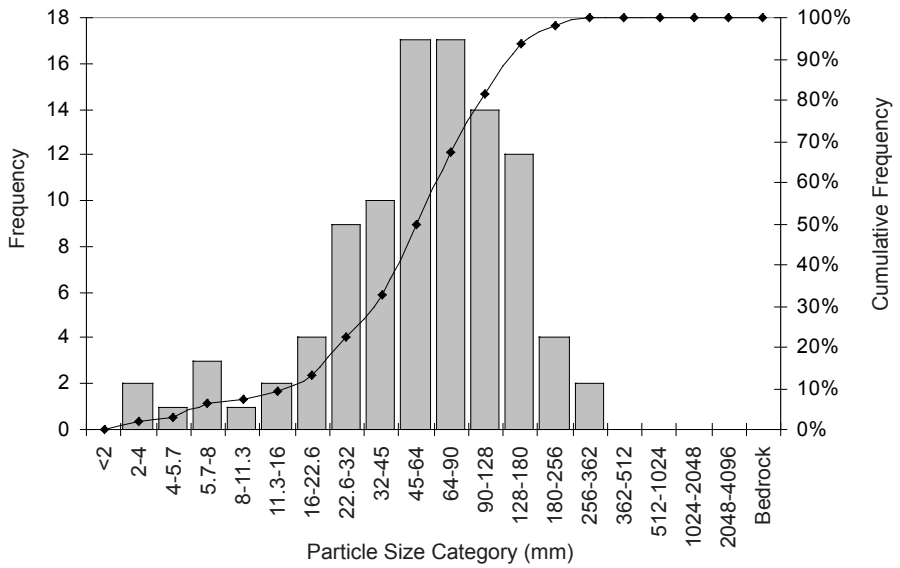

Size Class	Size percent finer than (mm)
D5	8
D16	26
D50	65
D84	130
D95	191.5
D100	300

Material	Percent Composition
Sand	0%
Gravel	50%
Cobble	48%
Boulder	2%
Bedrock	0%

Sorting Coefficient: 1.27
Skewness Coefficient: 0.23