United States
Department of
Agriculture

**Forest Service**

**Technology &
Development
Program**

2400—Timber Management
March 1997
9724 1201—SDTDC

# LOGGING WITH AIR-CUSHION VEHICLES

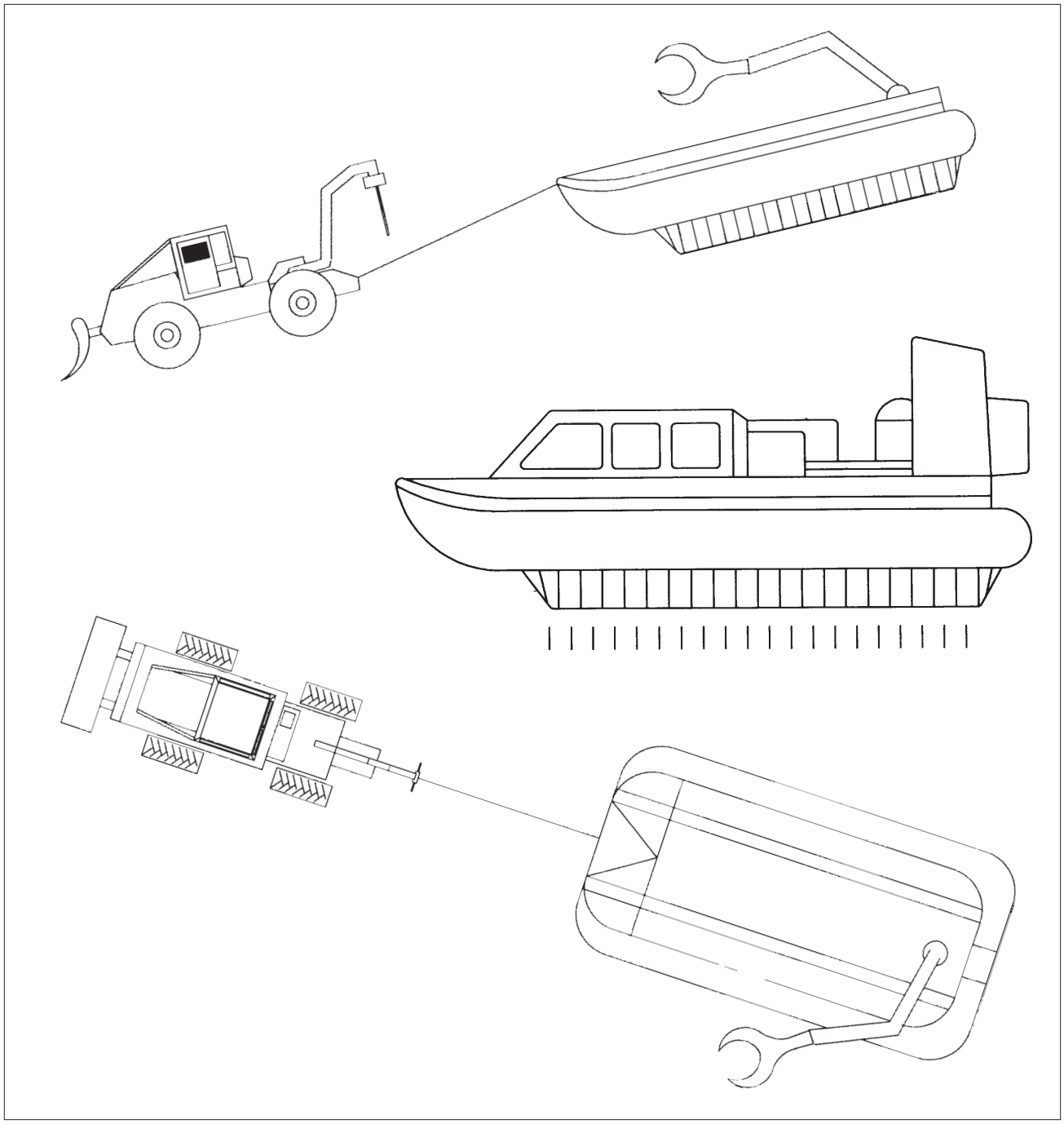

# LOGGING WITH AIR-CUSHION VEHICLES

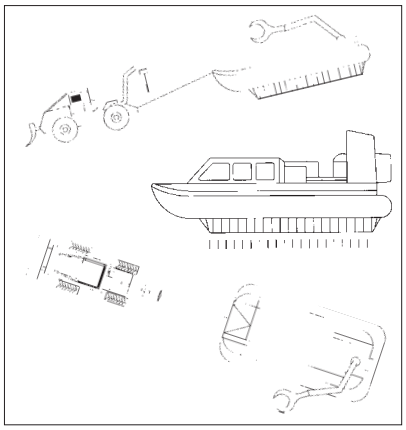

**Skip Garrett,**
*Mechanical Engineer*
*San Dimas Technology & Development Center*

**Don Studier,**
*Logging Engineer*
*Region 6 (Retired)*

**March 1997**

Information contained in this document has been developed for the guidance of employees of the Forest Service, USDA, its contractors, and its cooperating Federal and State agencies. The Department of Agriculture assumes no responsibility for the interpretation or use of this information by other than its own employees. The use of trade, firm, or corporation names is for the information and convenience of the reader. Such use does not constitute an official evaluation, conclusion, recommendation, endorsement, or approval of any product or service to the exclusion of others that may be suitable.

The United States Department of Agriculture (USDA) prohibits discrimination in its programs on the basis of race, color, national origin, sex, religion, age, disability, political beliefs, and marital or familial status. (Not all prohibited bases apply to all programs.) Persons with disabilities who require alternative means for communication of program information (braille, large print, large print, audiotape, etc.) should contact the USDA Office of Communications at 202-720-2791.

To file a complaint, write the Secretary of Agriculture, U.S. Department of Agriculture, Washington, DC 20250 or call 1-800-245-6340 (voice) or 202-720-1127 (TDD). USDA is an equal employment opportunity employer.

Printed on recycled paper

ABSTRACT ..... 1

INTRODUCTION ..... 1

BACKGROUND ..... 1

USE OF AIR CUSHION VEHICLES IN LOGGING ..... 3

Felling Operations ..... 5

Loading and Transportation of Logs to the Landing ..... 6

Landings ..... 6

ENGINEERING ANALYSIS ..... 7

CONCLUSIONS ..... 9

BIBLIOGRAPHY ..... 10

CONTENTS

## ABSTRACT

Air Cushion Vehicles (ACVs) have been developed and tested in Britian, Russia, and other European and Scandinavian countries, for hauling materials and transporting people. The United States military has extensively used ACVs for transporting personnel and equipment from ship to shore. Logging with ACV may be feasible in areas with topographic slopes less than five percent. The Southeastern United States, with its vast areas of wetlands, provide the greatest potential for use of ACVs for removing timber that would otherwise be unaccessible or very costly to remove by using other logging methods.

## INTRODUCTION

Many timbered areas in the United States have not been logged due to wet or marshy conditions. In the Southeast, areas with persistent, heavy rains and soils with low bearing strength make logging with conventional methods difficult or nearly impossible. In these areas, wheeled or tracked vehicles are not efficient or environmentally sensitive. They may damage tree roots of the residual stand and compact soil. Cable systems require solid anchors, tail trees, and intermediate supports, which in many cases, do not exist in the wet and marshy areas. Helicopters can be used to lift the logs and transport them to a landing area, however in many instances the value of the timber may not support the cost of removal.

An alternative to these modes of log transport is air-cushion technology. ACVs are unique machines that are capable of operating, in summer and winter, over snow and ice, water and land. Since they operate on a cushion of air they have low ground contact pressure and low tractive power requirements for movement. These characteristics make the concept of using ACVs for logging operations a promising one.

The purpose of this report is to present an analysis of the feasibility of using air-cushion technology for timber harvesting operations.

## BACKGROUND

ACVs, also known as hovercraft, surface-effect, or ground-effect vehicles, are a family of machines that rely on a cushion of air between the hull or body and the surface over which operation occurs. The air-cushion phenomenon, or ground effect as it is technically called, is not new. Scientists have known for many years that a jet of air forced out of the bottom of a vehicle against a hard surface such as ground or water forms a cushion that reduces friction and provides lifting power. A vehicle designed to travel a few feet above the earth's surface can be continuously suspended in the air as long as the compressed-air cushion is kept beneath it. Without the conventional friction from land or water the vehicle is entirely free to move in any direction and therefore requires very little power to move at considerable speed.

The lift used by ACVs is generation of an air cushion at a higher pressure than the surrounding atmosphere and is bounded: from above by the under surface of the vehicle; from below by the surface over which it operates; and at the sides by an air curtain that is contained by a flexible "skirt" (Figure 1). The skirt is a rubberized fabric attached around the edge of the vehicle. Air is ejected from the under surface of the vehicle through a nozzle or duct which extends around the entire perimeter of the vehicle. The pressure is generated by fans driven by diesel or gasoline engines. A region of high-pressure air is developed below the vehicle providing lift. Eventually, this air is lost to the atmosphere.

Virtually every industrial country has developed and deployed ACVs. The first machine was built and tested in the United Kingdom in 1959. Canadian, Scandinavian, and European firms have concentrated on the development of ACVs for commercial transport uses. In Russia, the military and oil industry have driven ACV development.

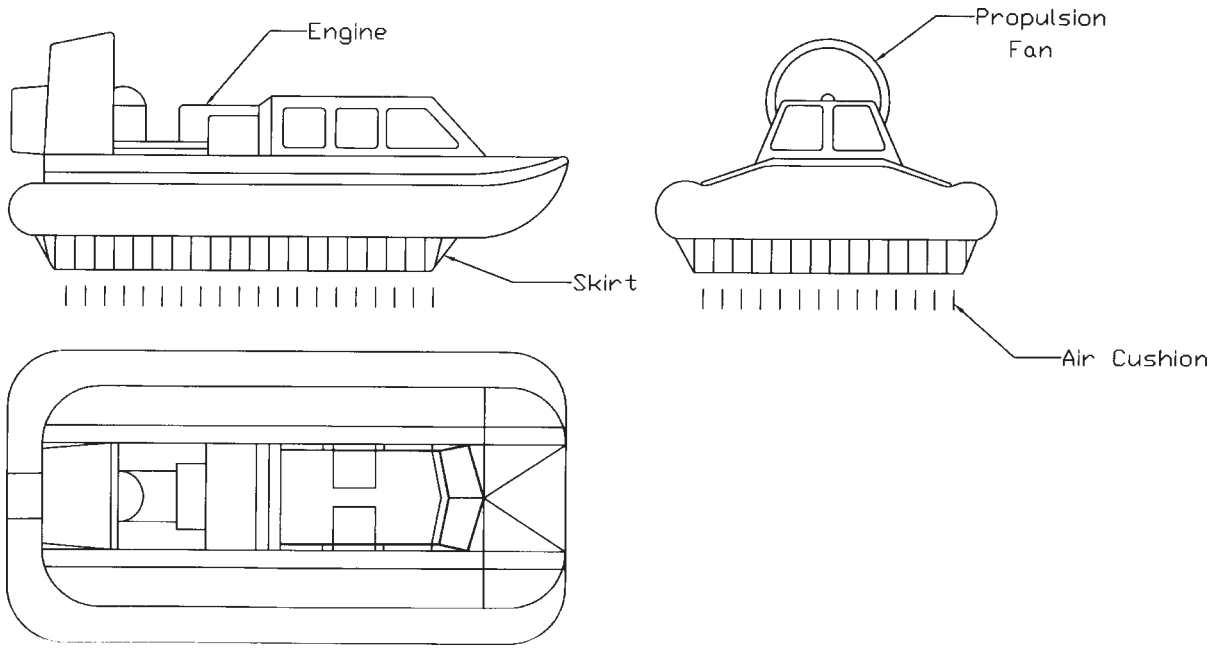


*Figure 1. Picture of ACV with labels showing skirt, air cushion, engine, etc.*

ACV development in the United States was primarily for military operations. Specialized design features, such as the rapid loading and unloading of troops and equipment, radar and armaments, and rugged, battle-ready structures, made these machines extremely complex and expensive. The military operates hundreds of ACVs and virtually all of them are used for "Logistics-Over-the Shore" operations, moving personnel and machines from sea to land. Typical payloads contain two, three, or four battle tanks.

The Army recently developed and tested a system called the Pontoon Air Cushion Kit consisting of a modular air cushion skirt with autonomous air supply units. The skirt and air supply units attach directly to the Army's modular causeway sections (8 foot by 8 foot by 40 foot (2.4m by 2.4m by 12m) boxes usually configured into 32 foot by 80 foot (9.6m by 24m) platforms). Once installed, the kit enables the modular causeway section to operate as an air-cushion platform that can carry up to 140 tons (142 t).

ACVs have seen limited use by police or emergency units and the Coast Guard for patrol, fire fighting, search and rescue, and ice breaking. The National Park Service is acquiring a specialized cargo/patrol craft for Key Biscayne National Park. Commercial use has been primarily in other parts of the world, mostly in passenger ferry service. Textron Marine Systems, the primary military supplier, produces a family of multipurpose air-cushion vehicles that can be configured as a water taxi to carry up to 40 passengers or as a cargo utility craft with a 15,000 pound (6804 kg) payload capacity.

In late May 1975, two Air-Cushion Transporters owned and operated by Hover Systems, Inc. were put into service transporting construction equipment and material across a half-mile section of Alaska's Yukon River. ACVs were selected over conventional water craft because of their speed over open water and their potential for use over ice. Use continued until late October 1975 at which time the Yukon River Bridge was opened to traffic. Both craft

were in service 24 hours per day. The transporters were moved back and forth across the river by winch-powered cables. A cable was attached to each end of the transporter to permit the change in direction by reversing the winch. A tail block on the opposite bank completed the cable system. The Air-Cushion Transporters were available for service 90 percent of the time with an average down time of 2.4 hours per 24 hour period. Each transporter made approximately 2000 round trips and moved more than 14,000 vehicles across the river.

Self-propelled ACVs have also been successfully tested for use in hauling equipment. Hover Systems, Inc. constructed a self-propelled 50-ton (50.8 t) payload air-cushion barge. Called the D-PAAC, it was tested for the State of Alaska Department of Transportation and was subsequently acquired by the U.S. Army. Propulsion of the craft is provided by a unique hydraulic drive system. The hydraulic unit operates a set of eight fully articulated wheels for traction over land. Paddle wheels, cantilevered laterally from the wheel hubs, provide propulsion over water. The wheel loading is controllable so that traction can be maintained over almost any terrain.

## USE OF AIR CUSHION VEHICLES IN LOGGING

The feasibility of using Air Cushion Vehicles in logging operations was investigated in Canada in the early 1970's. Test results showed very little damage to soil and vegetation from the air velocities required to maintain the craft in the hover position. Ground pressures under the craft measured less than one half psi gauge (3.5 kPa). These tests were conducted on a platform that was towed by a rubber tire skidder, and thus did not have the additional weight of the propulsion and guidance system. The weight of the vehicle tested was 3400 pounds (1543 kg) and could carry a 5000 pound (2268 kg) payload. Even with the added weight of a self-propelled vehicle, ground pressures were estimated to be between 1 and 3 psi gauge (6.9 and 20.7 kPa).

Most applications of air cushion vehicle technology have been over smooth surfaces such as water. In general, most commercial and military applications have been with self-propelled vehicles which are large and designed to operate at high speeds. In logging operations surfaces would be extremely rough and speeds in the range of 2 to 5 mph (3.2 to 8 kph).

The maximum slope of the ground on which an ACV can operate has not been determined; however, when a vehicle is on a smooth level surface all of the downward force due to its weight is acting on a perpendicular plane. As the slope of the ground increases, the downward force must be divided into two components, one acting parallel to the plane of the ground and one acting perpendicular to it. Thus, there must be enough air pressure not only to lift the vehicle but also to overcome the weight component acting parallel to the ground surface or the vehicle as it is lifted. At some as-yet unknown slope, the vehicle will have a tendency to slide down the hill.
ACVs can be configured to be towed or they can be self-propelled. (Figure 2) An ACV, such as the platform tested in Canada, can be towed by a rubber tire skidder or a crawler tractor.

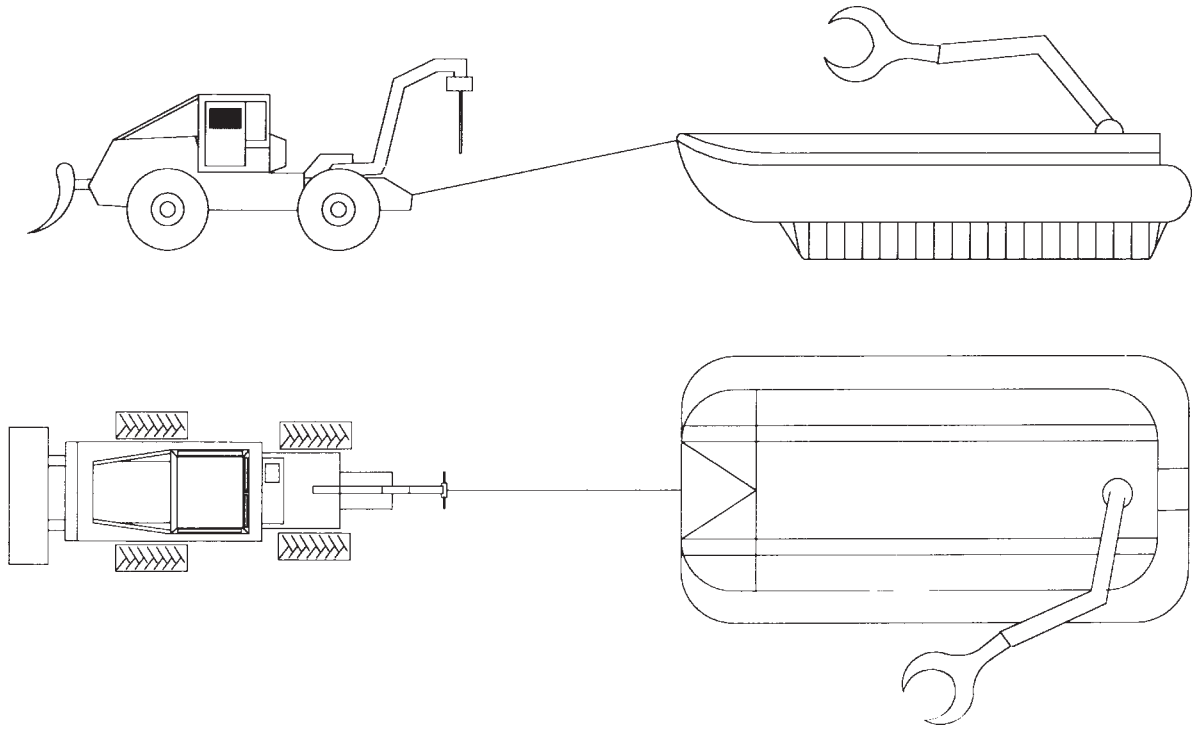

*Figure 2. ACV towed by a rubber tire skidder.*

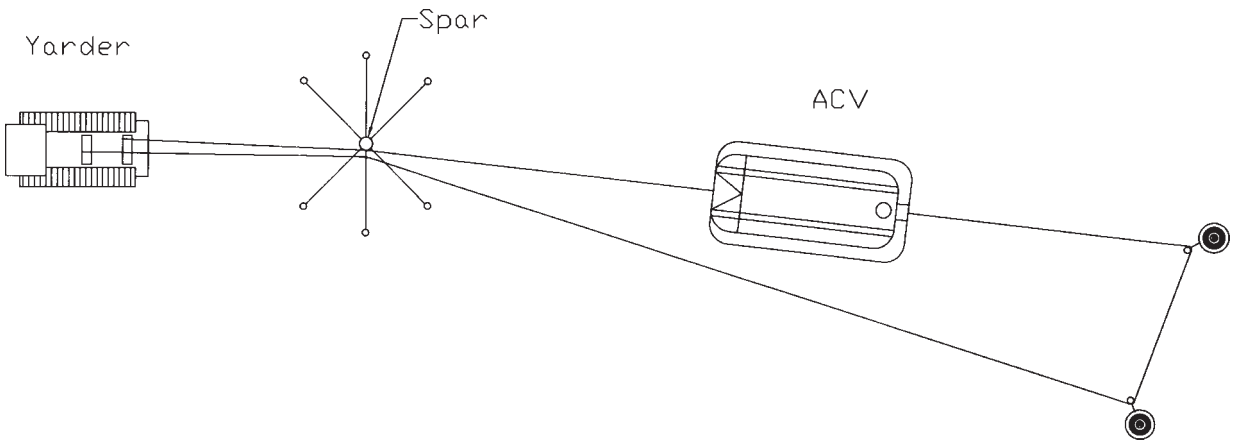


*Figure 3. ACV towed with a cable system.*

The advantage of this configuration is that the engine on the platform would need only enough horsepower to generate the air pressure to lift the platform with its payload. The disadvantage would be the impacts associated with the towing vehicle. For example, ground pressures under the towing vehicle could reach as high as 7 psi guage (48.2 kPa) depending on the type of vehicle used. The overall length of the platform and towing vehicle could exceed 65 feet (19.5 m) which would be a disadvantage when working in tightly spaced stands.

The towing vehicle could be replaced with a winch system and cables (figure 3). The system could be rigged much like a highlead system with a mainline and haulback, or it could be rigged using endless line with a capstan winch. While this system would virtually eliminate major ground pressure and soil disturbance, it would loose its ability to be mobile in the woods and

would be confined to the cableways. Logs lying between the cable ways would have to be ground skidded laterally to the ACV, thereby creating the potential for more damage to the residual stand between cable ways.

Self-propelled ACV's are used in the military for transporting personnel and equipment and have a great potential for use in logging. The operator cab with controls and propulsion system are integral to the machine. Power requirements are greater since the engine is now providing horsepower to propel the machine as well as providing the air pressure needed to lift the machine with its payload. Since the empty weight of the machine is greater, to lift the same payload as the towed vehicle a larger amount of air will be needed. The self propelled machine has the advantage of being more maneuverable than the towed ACV and could be operated much like a large forwarder in a mechanized harvesting operation, but with much less ground pressure and soil disturbance.

**Felling Operations**

As in a mechanized harvesting operation, the felling pattern will influence how efficient the ACV is used to deliver logs to the landing. There are numerous felling methods that can be used to achieve the optimum felling pattern. Trees can be felled manually using chain saws and bucking them to length that the ACV can accommodate. Felling patterns would be similar to those recommended for cable logging if a cable towed vehicle where used, or for tractor logging if using a self propelled or a vehicle towed ACV. With either configuration, a loading boom would be needed to pick up single logs or bunches of logs and place them on the ACV.

Felling can also be accomplished using a feller-buncher, if tree length logs can be hauled on the ACV or by using a harvester which would fell the tree, cut the logs to length, and leave them in piles or bunches next to the skid road for the ACV. (Figure 4)

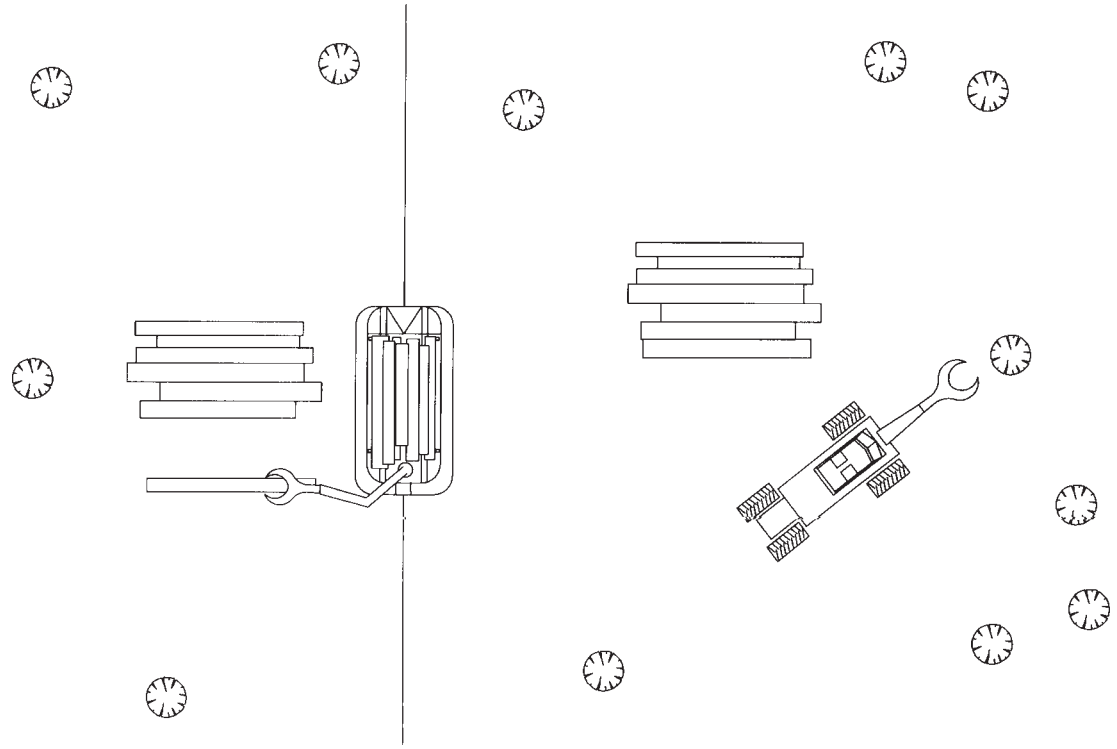

*Figure 4. Planned view of feller buncher working in a partial cut.*
*ACV is self-loading and is moved with a cable system as shown in Figure 3.*

If felling manually, the ACV trails would need to be spaced close enough so the logs can be reached with the loading boom. Using a chain saw in the loading head, the ACV could then buck the trees to length as part of the loading operation. This would eliminate the need for another piece of equipment on the ground.

**Loading and Transportation of Logs to the Landing**

Loading the ACV in the woods would be accomplished by a loading boom with grapples mounted on the machine. If logs were prebunched during the felling operation the ACV would move from one bunch to the next loading bunches until it obtained a full load and then move to the landing. At each bunch, the ACV would lower itself to the ground during the loading operation.

If the ACV was equipped with a processing head, trees could be felled in a pattern such that the ACV could maneuver to a spot that the butt end of the trees could be grabbed, delimbed, cut to specified log length, and loaded all in one operation. As in other mechanized harvesting operations, the time spent traveling between bunches of trees should be minimized. In other words, the more trees available at one spot to be processed, the higher the production of the machine. This is particularly important with an ACV operation, because moving the machine from one bunch to another is much more involved than with a mechanized harvesting operation.

Moving logs to the landing with a loaded ACV necessitates preplanning of routes. The travel way must be cleared of trees wide enough to allow ACV passage. Stumps, logs and debris, if not over 1 1/2 feet (0.5m) high would not be an obstacle to the ACV . However, stumps and debris taller than this may be a concern due to excessive wear of the skirt material and the possibility of hang-ups causing increased towing requirements and shock loads. Stumps and logs greater than 1 1/2 feet (0.5m) high would need to be removed or lowered. The ACV does have an advantage over forwarders in its ability to maneuver around trees by moving sideways. Therefore sharp turns in many cases should not be a problem even with logs protruding out the back of the machine.

The ACV, since it does minimal damage to the soil, could move anywhere in the unit. Studies have found that damage to vegetation is negligible and that small sticks and dust may be blown to the side but the displacement of the materials is very minimal. The limiting factor is overall size and ability to move among the residual stand without causing damage.

Skid trails for the ACV located over dry, porous soils may result in a payload reduction. A porous surface allows air to escape quickly and loss of cushion pressure. Japanese researchers have looked at the potential for using a fabric covered road to overcome this problem and to reduce the amount of dust when operating on dry land.

In the case of the cable towed ACV, the vehicle would be confined to the path of the cableway and logs would need to be prebunched along the cableway. An alternative would be to install a winch on the ACV and winch the logs to the vehicle at various stationary locations along the cableway.

**Landings**

Landing operations would be similar to landing operations with a harvester-forwarder operation. Logs can be loaded onto set-out trailers directly from the ACV which are parked along the side of the road. Therefore any wide area such as a turnout can be used for a landing area. An area is usually needed to sort log by species or length. A turn around area will also be needed for trucks.

## ENGINEERING ANALYSIS

ACV designing and engineering has evolved greatly over the past 30 years. Much research and development effort has been expended in studying engines, fans, propulsion systems, and particularly skirts. Many unique machines have been built and tested. Military and commercial needs have pushed the state-of-the-art to a point where design and development of an ACV for logging would be a low risk proposition.

Most ACVs developed to date have been self-propelled, and most have aerodynamic propellers. Even when using the largest practical ducted propellers, the conversion of shaft horsepower to thrust is very inefficient, particularly at low speeds. Fuel economy is low and maintenance is high. Based on this, ACVs for logging should be towed, winched, or have their own wheeled propulsion system.

Current practices in the wet lowland areas of Southeastern United States often entail use of a steel sled approximately ten feet wide, shaped like a boat, and loaded with logs then yarded to a landing using a large double-drum winch set. Modified hydraulic excavators equipped with large grapples crawl through the unit moving the logs to the skid trail and loading them onto the sled. The sled will hold 40,000 to 50,000 pounds (18144 kg to 22680 kg) of logs and the entire load is skidded to the landing using the winch system. A tremendous amount of energy is required in dragging the heavy sled and log load. This results in damage to the ground and vegetive root mass as the skid trail becomes a channel. If the sled were supported by a cushion of air, very little towing force would be required and virtually no damage to the site would occur. Research studies in Canada on ACV logging showed that even after several passes the ground and vegetation including seedlings showed little damage from air cushion or vehicle.

In the above example, adding the cushion of air under the sled turns it into an air-cushion barge, an essentially frictionless transporter. While this piece of equipment would certainly be new, it would not necessarily be exotic to the logger. An air-cushion barge would have a steel structure with bunks to cradle the logs and a large diesel (or possibly gasoline) engine. The engine drives a large fan or blower which is attached to ducts that direct airflow to the rubber skirt. The skirt is made in sections that can be replaced individually and repaired easily in the field. Maintaining a machine of this type would be no more difficult than maintaining current logging equipment.

The payload of an air-cushion barge would depend on the size of the machine and the cushion pressure. For example, an air-cushion barge built for logging would be constructed with a sturdy steel frame, steel deck, and two diesel engines. Two engines placed symmetrically provide more stability and redundancy enabling the machine to continue operation in the event of engine or fan failure. A conservative estimate of the weight of a 24 foot by 48 foot (7.2 m by 14.4 m) barge with fans, engines, fuel tanks, and accessories, is 34,000 pounds (15422 kg). An air-cushion pressure of 0.4 psi guage (2.76 kPa) would provide 66,000 pounds of lift leaving 32,000 pounds (14515 kg) for payload. Raising the cushion pressure to 0.6 psi guage (4.14 kPa) would increase the lift to 99,000 pounds (44906 kg), increasing the potential payload to 65,000 pounds (29484 kg).

Fuel consumption for a machine as described above would be similar to skidding machines in use today. Since the air cushion is needed only when the barge is moving it would spend most of the time with hard structure on the ground and engine idling. This would facilitate loading and unloading because the log bunks would be lower when the machine is not “on cushion” and would reduce engine wear and conserve fuel.

The cost of an air-cushion barge for logging does not compare favorably with that of the steel sleds in use, nor is the comparison reasonable in terms of environmental

sensitivity. A prototype air-cushion barge built specifically for logging could be designed and built for approximately $250,000 and production machines would cost well under $200,000. At these prices, the cost of logging with ACVs would be very similar to the cost to log with mechanized harvester in similar conditions, with environmental benefits resulting.

Most ACVs in use today were designed for use on relatively flat surfaces. While they can operate over rough surfaces, ACVs will tend to slide downhill on a slope. For an air-cushion barge system, the winch and cable would have to be sized to counteract this force. A simple free-body diagram analysis shows that this force would be equal to the weight of the barge times the sine of the slope angle. A 100,000 pound (45360 kg) barge on a 50 percent slope would require a towing force of 44,700 pounds (198.834 kN). The small barge on a 100 percent slope would require a towing force of 70,700 pounds (314.488 kN). These would be the towing forces needed but sizing the winch and cable system would require adjustments due to hang-ups, loading, and factors of safety. Nevertheless, these forces are not large for winches and cables currently used for logging.

**Application of ACVs in the United States**

ACVs, as a timber harvest vehicle, are most applicable in the Southeast where there is an abundance of timberland on slopes less than five percent. Most slopes under five percent in the Southeast are wet sites. Table 1 shows the total acreage of wet timberlands in 13 States in the Southeast and the percentage of the total.

*Table 1. Acres of timberlands and wetlands for 13 Southeastern states.*

| State | Timberland | Wetland | Percent |
|---|---|---|---|
| | Acres | | |
| Alabama | 21,931,926 | 2,269,479 | 10.3 |
| Arkansas | 17,246,666 | 2,676,588 | 15.5 |
| Florida | 14,982,607 | 3,909,614 | 26.1 |
| Georgia | 23,631,214 | 3,421,690 | 14.5 |
| Kentucky | 12,348,667 | 616,371 | 5.0 |
| Louisiana | 13,783,023 | 4,740,540 | 34.4 |
| Mississippi | 18,587,406 | 3,711,386 | 20.0 |
| North Carolina | 18,710,381 | 2,624,416 | 14.0 |
| Oklahoma | 4,895,491 | 503,847 | 10.3 |
| South Carolina | 12,454,925 | 2,467,916 | 19.8 |
| Tennessee | 13,265,246 | 682,313 | 5.1 |
| Texas | 11,773,762 | 1,808,620 | 15.4 |
| Virginia | 15,447,550 | 621,943 | 4.0 |
| All States | 199,058,864 | 30,054,723 | 15.1 |

Two timber types predominate the wetland acreage shown in Table 1. There is Oak, Gum and Cypress; and Elm, Ash and Cottonwood. The data was compiled from USDA Forest Service's Region 8 in Atlanta GA. Less than two percent of the acreage of wet timberlands are on National Forest land and approximately 21 percent is on industrial/private land. There is an additional 41,425,000 acres of longleaf-slash pine and loblolly-shortleaf pine on slopes less than five percent.

Table 2 presents acreages within Forest Service Region 9 and represents all ownerships.

*Table 2. Acres in all ownerships in Region 9 of slopes under five percent for three timber types.*

| States | Timber Type (Acres) | |
|---|---|---|
| | Elm-Ash-Cottonwood | Pine |
| North and Midwest | 5,410,600 | 8,522,600 |
| East and Northeast | 2,855,000 | 5,501,700 |
| Total all States | 8,265,600 | 14,024,300 |

The acreages presented above are total acres of timberlands on slopes under five percent. All of these acres may not be available for timber harvest for various reasons. This data was obtained from the North Central Forest Inventory and Analysis data base, compiled by the USDA Forest Service North Central Forest Experiment Station.

## CONCLUSIONS

The movement of wood from the stump to the roadside has always presented environmental and cost effectiveness challenges. In many areas, the soil characteristics or amount of moisture present makes logging with wheeled or tracked machines inefficient or environmentally detrimental. While helicopters and balloons are available, these alternatives have limitations and in many instances, the value of the product will not support the use of these expensive systems.

The military, in conjunction with the oil and transportation industries, have funded the development and testing of air-cushion technology for more than three decades. ACV state-of-the-art has great potential for application in timber harvesting. The only conclusion that can be drawn from available research literature, which includes engineering measurements and qualitative assessments made during field trials, is that the concept of using ACVs for logging operations is a promising one. Further investigation and full-scale testing of the application of this concept are recommended.

## BIBLIOGRAPHY

Murchison, H.G., C.R. Silversides and T.B. Tsay. 1973. *Studies Related to the Possible Application of ACV Technology in Logging.* Dep. Environ., Can. Forest Serv., Forest Mange. Inst., Inf. Rep. FMR-X-52, 40 p.

Silversides, C.R., D,V. Myles, and H.G. Murchison. 1971. *Possible Application of the ACV Principle in Logging.* Dep. Environ., Can. Forest Serv., Forest Mange. Inst., Inf. Rep. FMR-X-36, 51 p.

Silversides, C.R., T.B. Tsay, and H.M. Mucha. 1974. *Effect of Obstacles and Ground Clearance Upon the Movement of an ACV Test Platform.* Dep. Environ., Can. Forest Serv., Forest Mange. Inst., Innf. Rep. FMR-X-62. 23 p.

Whalen Michael H., and William Rogers. 1984. *Developmental Testing of Air Cushion Vehicle (LACV-30),* David Taylor Naval Ship Research and Development Center, Bethesda, Maryland, Preliminary Environmental Assessment. 24 p.

Ohsato, Shoichi, and Shigeaki Murayama. 1980. *Studies on the Running Resistance of an ACV Over a Fabric Road.* Tokyo University of Agriculture and Technology, Japan 15 p.

This publication is the result of an investigation, conducted by the San Dimas Technology and Development Center, into the potential of utilizing air cushion technology in the management of National Forest resources.

The Air Cushion Vehicle project was initiated by the Timber Sale Technology Committee. This group meets annually to discuss field needs in the area of timber sales, ranging from initial sale layout to the transport of forest products. Work is prioritized and future projects are developed to address needs which appear to be multi-regional in scope.

Field personnel are encouraged to contact their Regional representative on this committee if they see a need for the distribution of information, the application of new technology, or have ideas for new product development.

The current Timber Sales Technology Committee representatives are:

| | |
|---|---|
| Dan Castillo | R01A |
| Don Martinez | R02F03A |
| Alan Lucas | R03A |
| Gerry Thompson | R04A |
| Alan Quan | R05F15A |
| Rick Toupin | R06C |
| Jim Sherar | R08F11A |
| Tom Peterson | R09A |
| Don Golnick | R10A |
| Rod Sallee | W01C |

BOB SIMONSON, W07A
Program Leader, Timber

**PROJECT PROPOSAL**
**USDA Forest Service**
**Technology and Development Program**

SDTDC solicits input from the field for suggestions for future projects. Your suggestions are important to us, so please take a few moments to complete this form and return to the address provided.

Project Originator: _____ Name _____ Date

Title _____

Unit _____

Mailing address _____

DG address _____ Telephone _____

**Project Title:** _____

**Current Problem/Need**
Describe how work is currently being done; current problem/need, location; why improvement is needed.

**Proposed Solution**
Describe your concept of the end product, i.e., new equipment design, video production, handbook, etc.

**Potential Benefits**
Describe how this product will improve safety, resource management; increase efficiency, customer satisfaction, productivity; reduce cost, time.

_____

_____

_____

*- affix here -*

USDA, Forest Service
SDTDC
Attn: Timber Program Leader
444 E. Bonita Avenue
San Dimas, CA 91773-3198

---

**User Feedback Survey**

User Name (optional) _____

_____ Title

_____ Unit

**Logging With Air-Cushion Vehicles**
**9724 1201**

| Benefits | YES | NO | Amount |
|---|---|---|---|
| Improves safety | _____ | _____ | _____ |
| Saves money | _____ | _____ | _____ |
| Saves time | _____ | _____ | _____ |
| Increases efficiency | _____ | _____ | _____ |
| Other | _____ | _____ | _____ |

---

How effective or relevant is this information?

What would you change?

General comments: