Passage of Adult Salmon and Trout Through Pipes

RETENTION COPY
FOR YOUR FILES
FOR RESEARCH ONLY.
FURTHER REPRODUCTION OF THIS ITEM
MAY CONSTITUTE COPYRIGHT INFRINGEMENT.

SPECIAL SCIENTIFIC REPORT–FISHERIES No. 592

UNITED STATES DEPARTMENT OF THE INTERIOR
U.S. FISH AND WILDLIFE SERVICE
BUREAU OF COMMERCIAL FISHERIES

SPECIAL SCIENTIFIC REPORT--FISHERIES

Robert L. Hacker, Editor

Mary Fukuyama, Associate Editor

PUBLICATION BOARD

John A. Guinan
John M. Patton, Jr.
Robert L. Hacker
Edward A. Schaefers
John I. Hodges
Parker S. Trefethen
Harvey Hutchings
Robert C. Wilson

Leslie W. Scattergood, Chairman

Special Scientific Report--Fisheries are preliminary or progress reports and reports on scientific investigations of restricted scope. Established as Special Scientific Reports in 1940, nos. 1 to 67 were issued from that date to 1949, when the new series, Special Scientific Report--Fisheries, with new serial numbering, was started.

Special Scientific Report--Fisheries are distributed free to libraries, research institutions, State agencies, and scientists.

UNITED STATES DEPARTMENT OF THE INTERIOR
Walter J. Hickel, *Secretary*
Russell E. Train, *Under Secretary*
Leslie L. Glasgow, *Assistant Secretary*
for Fish and Wildlife, Parks, and Marine Resources
Charles H. Meacham, *Commissioner*, U.S. FISH AND WILDLIFE SERVICE
Dayton L. Alverson, Acting Director, BUREAU OF COMMERCIAL FISHERIES

Passage of Adult Salmon and Trout Through Pipes

By

EMIL SLATICK

[redacted]

College, Alaska

ALASKA
SH
11
A335
no. 592

United States Fish and Wildlife Service
Special Scientific Report--Fisheries No. 592

Washington, D.C.
January 1970

RASMUSON LIBRARY
UNIVERSITY OF ALASKA FAIRBANKS

CONTENTS

	Page
Introduction	1
Experimental equipment and design	2
Pipe configuration	2
Illumination	3
Release of fish	3
Timing of fish	3
Comparison of fish passage	4
Effects of various factors on fish passage	4
Water velocity	4
Velocities in 0.3-m.-diameter pipe	4
Velocities in 0.6-m.-diameter pipe	5
Velocities in 0.9-m.-diameter pipe	5
Pipe diameter	6
Entrance and exit conditions	7
Changes in illumination	7
Changes in size	7
Illumination	9
Passage times	9
Percentages of fish that completed passage	10
Sharp turns in the pipe	11
Water depth	13
Capacity tests	17
Summary and conclusions	17
Results of tests	17
Conclusions	17
Acknowledgments	18
Literature cited	18

Passage of Adult Salmon and Trout Through Pipes[1]

By

EMIL SLATICK, Fishery Biologist

Bureau of Commercial Fisheries Biological Laboratory
Seattle, Washington 98102

ABSTRACT

Pipes, which are relatively inexpensive and easily installed, are an economical and efficient solution to certain problems of fish passage at dams and at other obstacles blocking migratory routes. The purposes of this study (1963-64) were to determine: (1) if adult salmon and trout at Bonneville Dam on the Columbia River would use a pipe as a passageway and (2) how the conditions at the entrance and within the pipe, diameter and length, illumination, and flow would influence passage. The pipes were 0.3, 0.6, and 0.9 m. in diameter and were 27.4 to 82.3 m. long.

Chinook salmon (Oncorhynchus tshawytscha), sockeye salmon (O. nerka), coho salmon (O. kisutch), and steelhead trout (Salmo gairdneri) passed through unilluminated pipes up to 82.3 m. long. Of the four species tested, only steelhead trout appeared to benefit appreciably from illumination. For distances up to 82.3 m., a 0.6-m.-diameter pipe was large enough to pass all salmon and trout. The fish passed through a 0.6-m.-diameter pipe when it was flooded or partly filled with water, but did not readily enter a 0.3-m. pipe until special conditions of water velocity and transition from pool to pipe were provided.

INTRODUCTION

Upstream passage facilities for adult salmon and trout at dams frequently require moving of the fish from one area to another at approximately the same elevation. Pipes, which are relatively inexpensive and easy to install, offer a potentially economical and efficient means of transport.

Fish transportation systems at dams on the Columbia River consist of collection facilities and channels leading to fish ladders. If salmon were to accept pipe passageways, it might be possible to expand the systems and reduce the number of fishways. This idea was put into effect at the Pelton regulating dam on the Deschutes River, Oreg., where a tunnel under the spillway connects the left bank collection system to the central ladder.[2] A submerged 1.5-m.-diameter pipe 25.9 m. long was also used successfully for 3 years as one entrance to the temporary fishway system during construction of Oxbow Dam on the Snake River.[3]

Another potential application of pipes is to extend fishway exits beyond the immediate influence of spillway gates, which might reduce or possibly eliminate the loss of fish that normally fall back over spillways. A significant number of tagged fish released into the forebay at Bonneville Dam fell back (U.S. Army Corps of Engineers, 1951) as did untagged fish (U.S. Army Corps of Engineers,

[1]Work financed by U.S. Army Corps of Engineers as part of a broad program of fisheries-engineering research to provide design criteria for more economical and efficient fish-passage facilities at Corps projects on the Columbia River.

[2]Gunsolus, Robert T., and George J. Eicher. 1962. Evaluation of the fish-passage facilities at the Pelton Project on the Deschutes River in Oregon. Fish. Comm. Oreg. and Portland Gen. Elec. Co., Portland, Oreg. 133 pp. [Processed.]

[3]Personal communication, Charles H. Wagner, Columbia Fisheries Program, Bureau of Commercial Fisheries, Portland, Oreg., May 29, 1969.

1948). Johnson (1966), too, demonstrated the need for such extensions. During his study at Ice Harbor Dam, 3 of 30 chinook salmon with sonic tags were swept back through open spillgates.

Our experiments with pipes were made during the salmon migration seasons of 1963 and 1964. The purposes in 1963 were to: (1) learn spacial and flow requirements of pipe passageways for adult salmon and trout and (2) examine the influence on fish of changes in illumination at the entrance and exit. During 1964 the tests were continued to: (1) explore further the spacial requirements (minimum diameter of pipe acceptable); (2) study the influence of water velocity, illumination, and water depth in longer pipes (up to 82.3 m.); (3) determine fish passing capacity; and (4) improve the transition zone from pool to pipe.

All tests were made in the Fisheries-Engineering Research Laboratory at Bonneville Dam on the Columbia River (see Collins and Elling, 1960). Basically the laboratory is a large enclosed rectangular tank about 54.9 m. long, 7.3 m. wide, and 7.3 m. deep. It is located adjacent to the Washington shore fish ladder on the right bank of the river. Fish are diverted from the ladder, enter and pass through the laboratory on their own volition, and re-enter the ladder to continue their ascent. They are not handled at any time.

EXPERIMENTAL EQUIPMENT AND DESIGN

Several different pipe configurations were used in testing the influence of flow and illumination upon fish passage.

Pipe Configuration

Two pipes were used in the 1963 experiments to examine spacial and flow requirements of pipe passageways and the influence of change in illumination at the entrance and exit. One pipe was 0.3 m. in diameter; the other, 0.9 m. Both pipes were 30.5 m. long and constructed of 0.9-m. sections of galvanized sheet-metal conduit, painted brown on the inside (fig. 1). The two pipes were mounted side by side with a common approach and introductory and exit pools (fig. 2). The pipes had smooth interior surfaces, were level, and installed with the center lines at the same elevation; they were submerged and completely filled with water so that there was equal pressure against the walls. Hinged doors at both ends permitted independent use of either pipe.

Water velocities were controlled by regulating the head on the pipes with stoplogs in the introductory and exit pools; velocities were

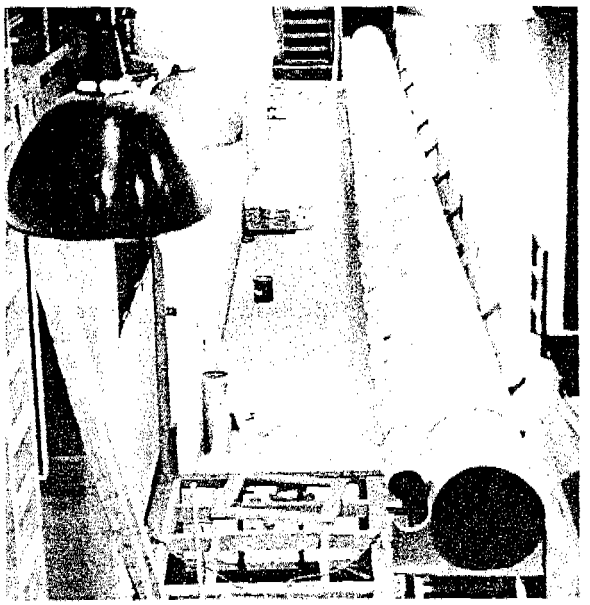

Figure 1.--Construction of the 0.3- and 0.9-m.-diameter pipes from 0.9-m. sections of galvanized sheet-metal conduit, 1963.

measured with a current meter at the downstream end.

Two pipes were used in 1964 (fig. 3) to examine the influence of pipe length and diameter, water velocity, depth of flow, light, fish capacity, and changes in size at the entrance of a 0.6-m.-diameter pipe, 82.3 m. long with two 180° turns (fig. 4), and a 0.3-m.-diameter straight pipe, 27.4 m. long. Both pipes were constructed of 0.9 m.-long sections of galvanized sheet-metal conduit, painted a uniform brown on the inside. Because of the requirements of the capacity tests, the 0.3-m. pipe was later replaced by a straight section of steel pipe, 27.4 m. long and 0.6 m. in diameter.

Both pipes had separate introductory and exit pools, permitting simultaneous use. Normally the pipes were submerged and flooded; when they were only partly full, however, the water levels inside and outside were the same.

Observation stations were established at the upstream and downstream ends of the two pipes to tally the fish as they entered and left the pipes (Points A and B, fig. 5). Hydroscopes (glass-bottomed tubes) were used to improve visibility. To increase visibility at the exits, luminescent light panels were mounted on the floor of the pools directly below the hydroscopes. The exit area of the 0.6-m.-diameter pipe also contained a wire fyke to prevent fish from entering the pipe system from the flow introduction pool. Electronic detectors (fig. 5) used in conjunction with a time-event recorder provided a record of fish passage through various sections.

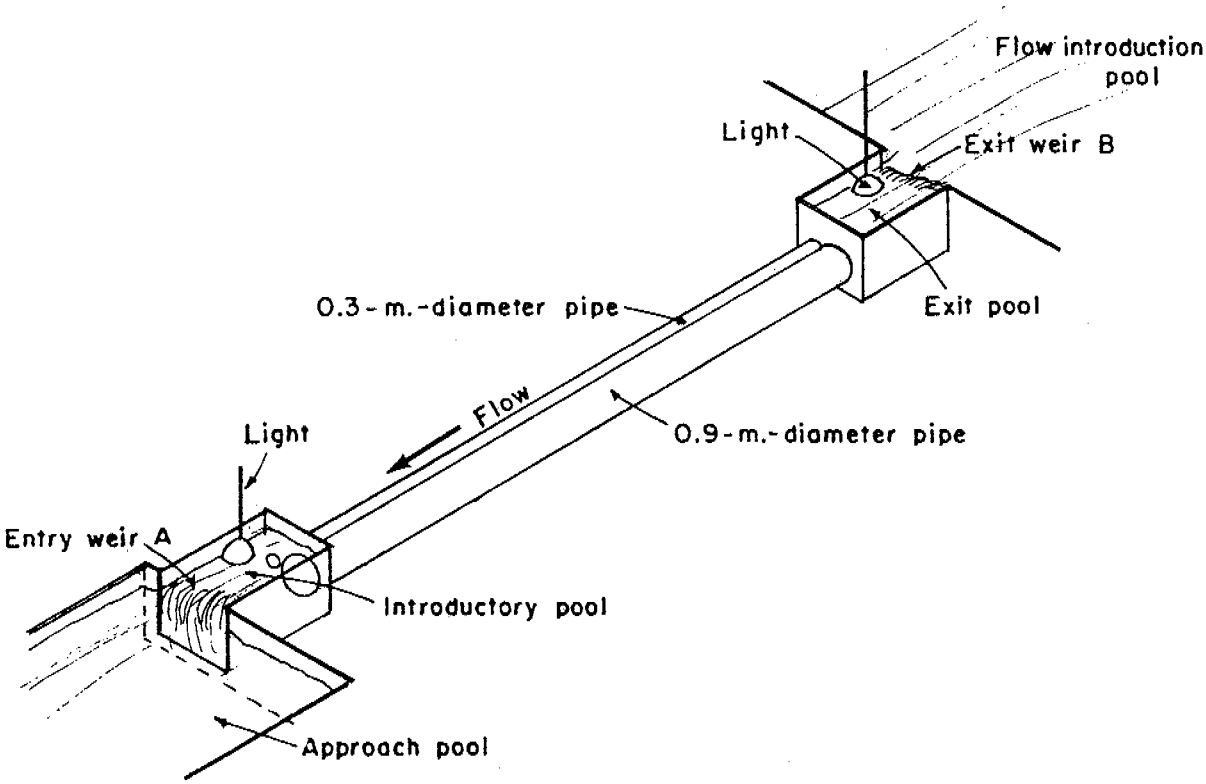

Figure 2.--Location of 0.3- and 0.9-m.-diameter pipes, entry and exist pools, and weirs where fish passage was recorded, 1963.

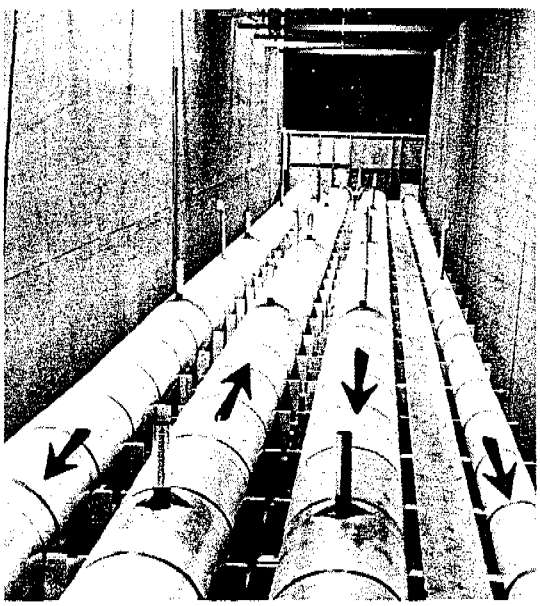

Figure 3.--The 82.3-m.-long, 0.6-m.-diameter pipe system (three sections on left) and the 27.4-m. section of the 0.3-m.-diameter pipe (on the right), 1964. Arrows indicated direction of flow. Fish entered pipes downstream of area in foreground and exited upstream of wall in background. Small upright pipe extensions contained lamps.

Illumination

Illumination in the open pool areas was provided by 1,000-watt mercury-vapor lights, spaced at 1.8-m. intervals and placed 1.8 m. above the water. These lights provided an intensity in illumination comparable to that in the main Bonneville fishway on a bright, cloudy day.

Illumination for the interior of the pipe was provided by 75-watt flood lamps. The head of the lamp protruded 2.5 cm. into the top of the pipe. In a pipe without water, the flood lamps produced an average light intensity of 321 foot-candles, measured at the bottom of the pipe. The lighting array consisted of 16 units spaced 5.2 m. apart in the straight sections of the 0.6-m. pipe (fig. 5).

Release of Fish

Two methods of release were used--an individual and a mass release.

In an individual release, the length and species were ascertained in the release box, from which the fish was released into the approach pool (1963) or introductory pool (1964) of the selected pipe system. Unless otherwise stated, individual releases were made in all tests.

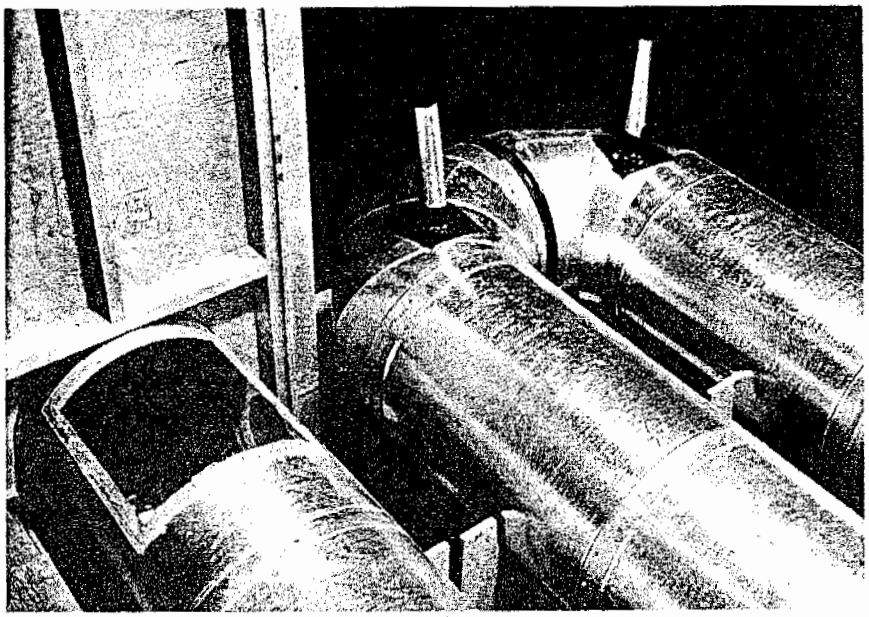

Figure 4.--Plexiglass window for viewing fish as they entered the 0.6-m.-diameter pipe, 1964. One of the 180° turns is shown on right.

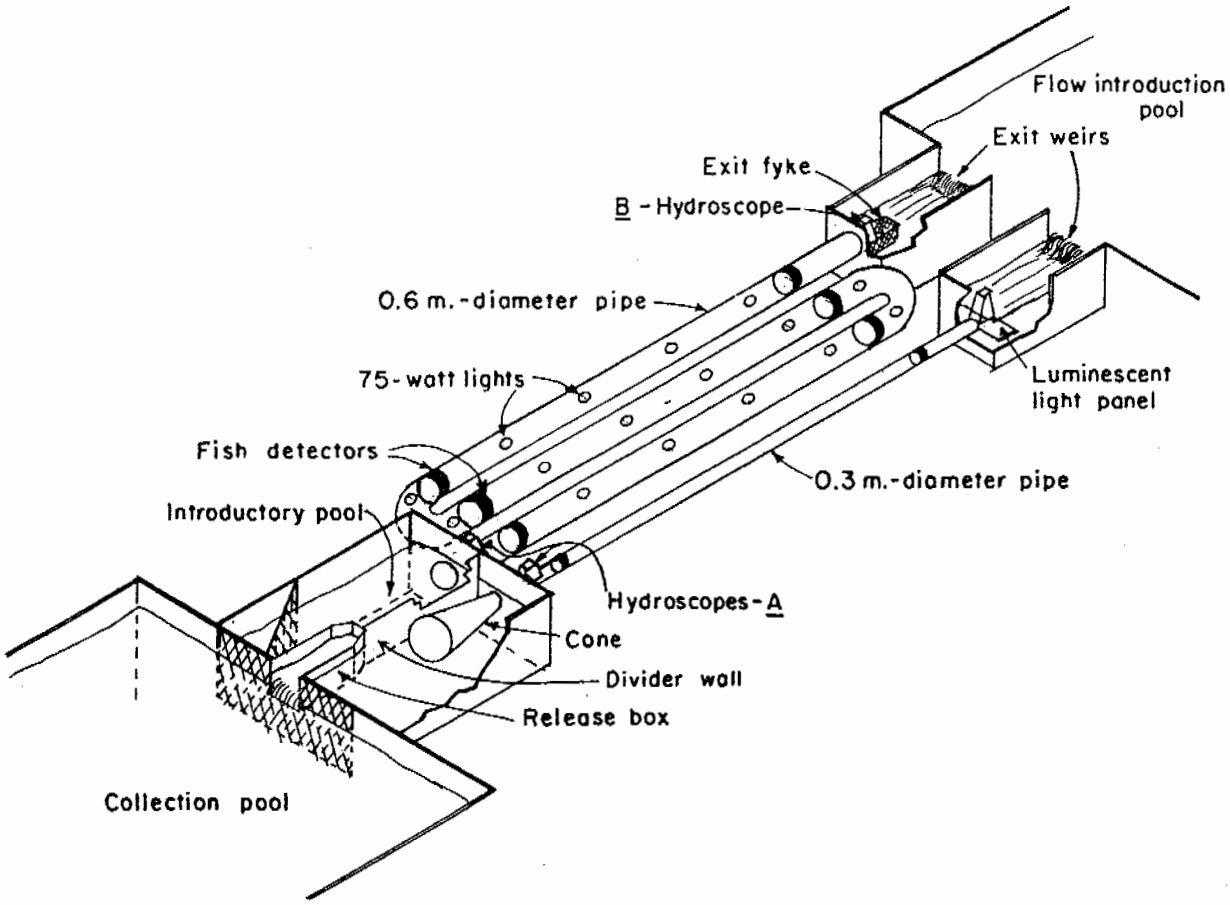

Figure 5.--Plan of the 0.3- and 0.6-m.-diameter pipes, showing the release box and hydroscopes where fish passage was recorded and locations of electronic detectors, interior pipe lamps, and truncated entrance cones, 1964.

In a mass release, a large group (300-800) was released from the collection pool by opening a large gate between it and the introductory pool. The fish were identified upstream from the exit pool.

Timing of Fish

A time-event recorder noted passage through the test area. Observers at the release, entry, and exit points activated push button switches to transmit information to the recorder, which transcribed the data to an operations sheet.

As the fish entering the 0.3- and 0.9-m.-diameter pipes could not be seen during the 1963 tests, the timing zone was extended from the downstream weir of the introductory pool to the upstream weir of the exit pool (A to B, fig. 2). Timing zones were somewhat more precise in 1964, when passage was timed through the introductory pool (release box to point A, fig. 5) and the pipe (A to B, fig. 5).

Arbitrary limits were established in both years so that excessive time would not be spent on fish that failed to pass through the test facility. In 1963, fish were allowed 45 minutes to pass through the approach pool and 35 minutes to pass through the timing zone. In the 1964 experiments the fish were allowed only 45 minutes to pass through the introductory pool and pipe. If passage was not completed within these limits, timing was stopped, the fish was removed, and another fish was introduced into the system.

Comparison of Fish Passage

Median passage times were used to compare the performance of salmon and trout under the various test conditions. A table of confidence intervals (Dixon and Massey, 1957) was used to test the significance of observed differences between these median passage times. The median passage time for a test condition was determined by arranging the passage times of individual fish in an array (table 1) and then selecting the middle value.

Terminated fish were included and assigned values of 35+ minutes in 1963 and 45+ minutes in 1964. This procedure had no effect upon the median as long as 50 percent of the fish required less than 35 and 45 minutes respectively to pass through the pipes. We were unable to compute median passage times in tests where most of the fish were terminated.

Table 1.--Distribution of passage times of individual chinook salmon, sockeye salmon, and steelhead trout through 30.5 m. of 0.3-m.-diameter pipe at water velocities of 0.3, 0.6, and 1.2 m.p.s., April-July 1963

Time interval	Spring chinook salmon			Summer chinook salmon			Sockeye salmon			Steelhead trout		
	April 15 to May 10			June 5 to 8			June 25 to July 4			July 17 to 21		
	Velocity (m.p.s.)			Velocity (m.p.s.)			Velocity (m.p.s.)			Velocity (m.p.s.)		
	0.3	0.6	1.2	0.3	0.6	1.2	0.3	0.6	1.2	0.3	0.6	1.2
Minutes	Number of fish			Number of fish			Number of fish			Number of fish		
0.0-1.9	--	4	--	--	--	--	--	5	2	--	9	1
2.0-3.9	--	6	7	--	1	3	1	5	11	1	7	4
4.0-5.9	--	1	9	--	1	--	2	3	5	2	--	3
6.0-7.9	1	3	14	--	1	3	1	2	1	--	2	1
8.0-9.9	--	5	2	--	1	2	--	--	5	1	4	4
10.0-11.9	--	2	4	--	1	1	1	2	4	1	1	1
12.0-13.9	--	3	4	--	--	--	1	1	--	--	1	1
14.0-15.9	--	7	5	--	--	--	--	--	2	1	--	4
16.0-17.9	--	3	1	--	1	1	1	1	2	--	3	1
18.0-19.9	--	4	1	--	1	--	1	1	2	1	2	--
20.0-21.9	--	1	3	--	1	2	--	--	--	--	1	1
22.0-23.9	--	--	--	--	--	1	2	--	--	--	--	--
24.0-25.9	--	1	3	--	1	--	--	1	--	--	--	--
26.0-27.9	--	1	1	--	--	--	1	2	--	--	--	1
28.0-29.9	--	--	--	--	--	--	--	1	--	--	--	--
30.0-31.9	--	--	2	--	--	--	--	1	--	--	--	--
32.0-33.9	--	--	--	--	2	1	--	4	--	--	--	--
34.0-34.9	--	--	1	--	--	--	--	--	--	--	--	--
35+	6	12	7	--	7	1	13	6	3	6	1	5
Total number of fish	7	53	64	--	18	15	24	35	37	13	31	27
Median (minutes)	35+	15.2	9.6	--	28.9	9.5	35+	13.9	6.9	19.6	3.4	10.9
Lower limit, median[1]	6.0	9.8	7.6	--	10.3	6.7	17.7	4.8	3.9	5.5	2.4	5.7
Upper limit, median[1]	35+	18.5	14.2	--	35+	21.6	35+	29.0	10.6	35+	9.3	16.3
Percentage that completed passage	14	77	89	--	61	93	46	83	92	54	97	81

[1] 95 percent confidence intervals about the median.

EFFECTS OF VARIOUS FACTORS ON FISH PASSAGE

These tests indicated that, if conditions are acceptable, adult salmon and trout enter and pass through pipes. The efficiency of a pipe as a passageway, however, may be influenced by such factors as water velocity, pipe diameter, entrance and exit conditions, illumination, pipe configuration, and water depth. The influences of these factors on fish passage are discussed in the following sections.

Water Velocity

Tests that measured the effect of water velocity on the passage of spring and summer chinook salmon, sockeye salmon, and steelhead trout were made in the 0.3- and 0.9-m.-diameter pipes in 1963 and in the 0.6-m.-diameter pipe in 1964. Water velocities were 0.15 to 1.2 m.p.s.

Velocities in 0.3-m.-diameter pipe.--Fish were tested in water velocities of 0.3 to 1.2 m.p.s. in the 0.3-m.-diameter pipe. Summer chinook salmon were tested in velocities of 0.6 and 1.2 m.p.s.

These tests showed that the entry and passage of fish through the 0.3-m.-diameter pipe was influenced by velocity. Spring and summer chinook and sockeye salmon entered and moved more quickly at 1.2 m.p.s. than at other velocities, but steelhead trout performed best at 0.6 m.p.s. (table 1).

We began the tests with spring chinook salmon at velocities of 0.3, 0.6, and 1.2 m.p.s. in the 0.3-m. pipe in 1963. The first tests at 0.3 m.p.s. demonstrated that this flow was not strong enough to induce fish passage; thus no further tests were made at this velocity during the spring or summer chinook salmon run. Later in the season, however, the 0.3 m.p.s. velocity was applied in tests with sockeye salmon and steelhead trout.

Median times required by spring chinook salmon to complete passage at velocities of 1.2, 0.6, and 0.3 m.p.s. were over 9, 15, and 35 minutes, respectively. Median passage time at 0.6 m.p.s. was significantly greater than at 1.2 m.p.s. Percentages of spring chinook salmon that completed passage ranged from 89 percent at 1.2 m.p.s. to 14 percent at 0.3 m.p.s.

The performance of summer chinook salmon was similar to that of spring chinook salmon in that the median passage time at 0.6 m.p.s. was significantly greater than at 1.2 m.p.s. (table 1). Percentages of chinook salmon that completed passage under the two conditions were 61 and 93 percent, respectively.

Median passage times of sockeye salmon ranged from 6.9 minutes at 1.2 m.p.s. to over 35 minutes at 0.3 m.p.s. (table 1). The median passage time at 0.3 m.p.s. was significantly greater than at either 0.6 or 1.2 m.p.s. Percentages of sockeye salmon that completed passage ranged from 92 percent at 1.2 m.p.s. to 46 percent at 0.3 m.p.s.

Median passage times for steelhead trout at 0.3, 0.6, and 1.2 m.p.s. were 19.6, 3.4, and 10.9 minutes, respectively (table 1). Median passage times at 0.3 and 1.2 m.p.s. were significantly greater than at 0.6 m.p.s. Percentages of steelhead trout that completed passage ranged from 97 percent at 0.6 m.p.s. to 54 percent at 0.3 m.p.s.

Velocities in 0.6-m.-diameter pipe.--Water velocities in 1964 were 0.3 to 0.9 m.p.s. in the 0.6-m.-diameter, 82.3-m.-long pipe. Summer chinook salmon were tested at velocities of 0.3 and 0.9 m.p.s. and spring chinook salmon, sockeye salmon, and steelhead trout, at 0.3, 0.6, and 0.9 m.p.s.

Fish passage in the 0.6-m.-diameter pipe did not vary greatly in relation to water velocity. Chinook and sockeye salmon performed slightly better at 0.9 m.p.s., whereas steelhead trout performed best at 0.6 m.p.s.

Median passage times of spring and summer chinook salmon ranged from 7.8 minutes at 0.9 m.p.s. to 10.6 minutes at 0.3 m.p.s. (table 2). Percentages of spring chinook salmon that completed passage through the 82.3-m. pipe ranged from 89 to 78 percent at the three velocities. Percentages of summer chinook salmon that completed passage were 88 and 87 percent at 0.3 and 0.9 m.p.s., respectively.

Passage times of sockeye salmon at the three water velocities were 6.3, 7.5, and 6.4 minutes. Percentages of sockeye salmon that completed passage ranged from 96 percent at 0.9 m.p.s. to 84 percent at 0.6 m.p.s.

Median passage times for steelhead trout at 0.3, 0.6, and 0.9 m.p.s. were 16.1, 16.0, and 29.7 minutes, respectively. The difference between the median passage times at 0.6 and 0.9 m.p.s. was significant but not that between 0.6 and 0.3 m.p.s. or 0.9 and 0.3 m.p.s. (table 2). Percentages of steelhead trout that completed passage at the three velocities ranged from 79 percent at 0.6 m.p.s. to 59 percent at 0.9 m.p.s.

Velocities in 0.9-m.-diameter pipe.--Water velocities from 0.15 to 0.6 m.p.s. were tested in 1963 in the 0.9-m.-diameter pipe. Spring chinook salmon were tested at velocities of 0.3 and 0.6 m.p.s. and summer chinook salmon, sockeye salmon, and steelhead trout at 0.15, 0.3, and 0.6 m.p.s.

Individual salmon and steelhead trout entered and passed through the 0.9-m. pipe at all the velocities, but their best performance usually was at 0.3 m.p.s. (table 3). Differences between the fastest and slowest median passage times ranged from 2 to 4.2 minutes for salmon and from 2.2 to 7.4 minutes for steelhead trout. Although the differences between median passage times at some velocities were statistically significant, the difference was small when the distance traveled (35.4 m.) is considered.

Responses of spring and summer chinook salmon were similar in that their median

Table 2.--Distribution of passage times of individual chinook salmon, sockeye salmon, and steelhead trout through 82.3 m. of 0.6-m.-diameter pipe at water velocities of 0.3, 0.6, and 0.9 m.p.s.; pipe system included two 180° turns, April-July 1964

Time interval	Spring chinook salmon			Summer chinook salmon			Sockeye salmon			Steelhead trout		
	April 23 to May 19			June 22 to 25			July 4 to 12			July 20 to 30		
	Velocity (m.p.s.)			Velocity (m.p.s.)			Velocity (m.p.s.)			Velocity (m.p.s.)		
	0.3	0.6	0.9	0.3	0.6	0.9	0.3	0.6	0.9	0.3	0.6	0.9
Minutes	Number of fish			Number of fish			Number of fish			Number of fish		
0.0- 1.9	--	--	1	2	--	--	--	--	1	--	--	--
2.0- 3.9	13	14	10	3	--	6	9	11	8	1	--	--
4.0- 5.9	13	13	21	5	--	5	15	9	24	1	3	2
6.0- 7.9	12	7	15	2	--	5	6	7	6	5	4	1
8.0- 9.9	6	8	10	--	--	5	6	3	11	3	3	3
10.0-11.9	5	4	8	4	--	1	5	2	6	2	3	3
12.0-13.9	9	3	5	--	--	2	--	--	3	2	1	--
14.0-15.9	4	4	4	--	--	--	--	4	2	2	2	1
16.0-17.9	6	1	2	1	--	2	--	2	--	1	5	--
18.0-19.9	1	2	1	1	--	--	--	2	3	1	2	1
20.0-21.9	2	--	--	--	--	--	--	--	1	2	--	2
22.0-23.9	3	1	--	--	--	--	--	1	--	--	--	1
24.0-25.9	--	--	--	1	--	--	--	--	1	2	--	--
26.0-27.9	2	--	--	--	--	--	1	--	--	--	1	1
28.0-29.9	1	1	1	2	--	--	1	--	--	--	--	2
30.0-31.9	1	1	--	1	--	--	1	--	1	--	--	1
32.0-33.9	1	--	--	--	--	--	--	--	--	1	1	1
34.0-35.9	1	--	--	--	--	--	--	--	--	--	--	--
36.0-37.9	--	2	1	1	--	1	--	--	--	--	--	1
38.0-39.9	--	--	1	--	--	--	--	--	--	--	--	--
40.0-41.9	--	--	--	--	--	--	1	--	--	--	1	--
42.0-43.9	--	--	--	--	--	--	--	--	--	--	--	--
44.0-44.9	--	--	--	--	--	--	--	--	--	--	--	--
45+	10	17	16	3	--	4	6	8	3	9	7	14
Total number of fish	90	78	96	26	--	31	51	49	70	32	33	34
Median (minutes)	10.6	9.5	8.0	10.4	--	7.8	6.3	7.5	6.4	16.1	16.0	29.5
Lower limit median[1]	7.6	6.5	6.4	5.6	--	5.9	5.4	5.7	5.4	9.2	10.5	19.2
Upper limit median[1]	13.7	13.3	10.3	25.6	--	10.5	8.4	11.1	8.5	33.3	19.2	45+
Percentage that completed passage	89	78	83	88	--	87	88	84	96	72	79	59

[1] 95 percent confidence intervals about the median.

passage times were significantly greater at 0.6 m.p.s. than at 0.3 m.p.s. (table 3). The median passage time of summer chinook salmon was also significantly greater at 0.15 m.p.s. than at 0.3 m.p.s. All of the spring chinook salmon completed passage at 0.3 and 0.6 m.p.s. Percentages of summer chinook salmon that completed passage ranged from 100 percent at 0.3 and 0.6 m.p.s. to 94 percent at 0.15 m.p.s.

Median passage times for sockeye salmon at 0.15, 0.3, and 0.6 m.p.s. were 4.2, 2.6, and 3.4 minutes, respectively. The difference in median passage times was statistically significant between 0.3 and 0.6 m.p.s. but not between 0.15 and 0.3 m.p.s. (table 3). Percentages of sockeye salmon that completed passage ranged from 99 percent at 0.3 m.p.s. to 100 percent at 0.15 and 0.6 m.p.s.

Median passage times of steelhead trout ranged from 2.2 minutes at 0.3 m.p.s. to 7.4 minutes at 0.6 m.p.s. Median passage times at 0.15 and 0.6 m.p.s. were significantly greater than at 0.3 m.p.s. (table 3). Percentages of steelhead trout that completed passage ranged from 100 percent at 0.3 m.p.s. to 80 percent at 0.6 m.p.s.

Pipe Diameter

The influence of pipe size was measured by comparing the passage of chinook salmon, sockeye salmon, and steelhead trout through equal lengths of 0.3- and 0.9-m.-diameter pipes under identical flow conditions (water velocity of 0.6 m.p.s.). All three species performed better in the 0.9-m. pipe than in the 0.3-m.-diameter pipe (table 4).

Median passage times through the 0.3- and 0.9-m. pipes were 24.2 and 3.1 minutes for spring chinook salmon and 10.6 and 3.3 minutes for summer chinook salmon. In both tests the median passage times through the 0.3-m. pipe were significantly greater than through the 0.9-m. pipe. Percentages that completed passage through the 0.3- and 0.9-m. pipes ranged

Table 3.--Distribution of passage times of individual chinook salmon, sockeye salmon, and steelhead trout through 30.5 m. of 0.9-m.-diameter pipe at water velocities of 0.15, 0.3, and 0.6 m.p.s. April-July 1963

Time interval	Spring chinook salmon			Summer chinook salmon			Sockeye salmon			Steelhead trout		
	April 19 to May 2			June 9 to 24			June 21 to July 8			July 23 to 28		
	Velocity (m.p.s.)			Velocity (m.p.s.)			Velocity (m.p.s.)			Velocity (m.p.s.)		
	0.15	0.3	0.6	0.15	0.3	0.6	0.15	0.3	0.6	0.15	0.3	0.6
Minutes	Number of fish			Number of fish			Number of fish			Number of fish		
0.0- 1.9	--	23	8	1	16	4	3	25	6	1	7	1
2.0- 3.9	--	11	17	6	15	11	6	25	13	9	7	3
4.0- 5.9	--	4	7	4	7	4	3	9	6	5	--	--
6.0- 7.9	--	2	3	1	1	2	1	4	3	2	--	1
8.0- 9.9	--	2	2	--	1	3	4	2	3	2	--	1
10.0-11.9	--	1	1	1	1	--	1	2	1	1	--	2
12.0-13.9	--	1	--	1	1	--	1	2	1	--	--	--
14.0-15.9	--	--	--	2	--	--	--	--	--	--	--	--
16.0-17.9	--	1	--	--	--	--	--	--	--	1	--	--
18.0-19.9	--	--	3	--	--	1	--	--	--	--	1	--
20.0-21.9	--	--	--	--	1	1	--	--	--	--	--	--
22.0-23.9	--	--	--	--	--	--	--	--	1	--	--	--
24.0-25.9	--	--	--	--	--	--	--	1	1	--	--	--
26.0-27.9	--	--	--	--	--	1	--	--	--	--	1	--
28.0-29.9	--	--	--	--	--	--	--	--	--	--	--	--
30.0-31.9	--	1	--	1	--	--	--	--	--	--	--	--
32.0-33.9	--	--	--	--	--	--	--	--	--	--	--	--
34.0-34.9	--	--	--	--	--	--	--	--	--	--	--	--
35+	--	--	1	1	--	--	--	1	--	1	--	2
Total number of fish	--	46	42	18	43	27	19	71	35	22	16	10
Median (minutes)	--	2.0	3.4	4.5	2.7	3.8	4.2	2.6	3.4	4.2	2.2	7.4
Lower limit median[1]	--	1.6	3.1	2.8	1.7	3.3	2.4	2.1	2.7	2.6	1.3	2.8
Upper limit median[1]	--	3.3	4.2	12.2	3.7	7.1	8.9	3.3	5.5	7.2	2.9	35+
Percentage that completed passage		100	100	94	100	100	100	99	100	95	100	80

[1] 95 percent confidence intervals about the median.

from 56 to 100 percent for spring chinook and from 81 to 96 percent for summer chinook salmon.

Median passage times required by sockeye salmon to complete passage through the 0.3- and 0.9-m. pipes were 9.4 and 3.0 minutes, respectively. Although this difference between the median passage times of the two pipes was large, it was not statistically significant (table 4). Percentages of sockeye salmon that completed passage through the 0.3- and 0.9-m.-diameter pipes were 73 and 93 percent, respectively.

Median passage times of steelhead trout ranged from 3.3 minutes in the 0.9-m. pipe to 8.6 minutes in the 0.3-m. pipe. The 5.3-minute difference between the median passage times was not statistically significant (table 4). Percentages of steelhead trout that completed passage through the two pipes were 96 and 80 percent, respectively.

Entrance and Exit Conditions

Two experiments were made to determine the effects of changes in illumination at the pipe entrance and exit, and in spacial transition from pool to pipe, on the entry and passage of fish through a pipe.

Changes in illumination.--The standard lighting condition (1,000-watt mercury-vapor lamps spaced 1.8 m. apart and 1.8 m. above the water) required the fish to pass through rather abrupt changes in illumination between the nonilluminated pipe and the illuminated introductory and exit pools (fig. 2). To determine if these sharp transitions impeded fish passage, a series of tests was made in 1963 in which passage was compared under sharp and gradual changes in illumination--created by placement of plywood covers on the introductory and exit pools.

These tests were made in the 0.9-m. pipe at a water velocity of 0.6 m.p.s. on chinook and sockeye salmon and steelhead trout. The fish were not impeded by the sharp transition from the illuminated to the nonilluminated pools. Median times required to complete passage ranged from 2.6 to 4.1 minutes when the light change was abrupt and from 2.8 to 3.7 minutes when the change was gradual; all the fish completed passage (table 5).

Changes in size.--During the 1963 experiments and again when testing began in 1964, observations of fish behavior in the introductory pool indicated a possible delay in passage from the pool to the pipe. A comparison of

Table 4.--Distribution of passage times of individual chinook salmon, sockeye salmon, and steelhead trout through 0.3-m.- and 0.9-m.-diameter pipes at water velocity of 0.6 m.p.s., May-July 1963

Time interval	Spring chinook salmon		Summer chinook salmon		Sockeye salmon		Steelhead trout	
	May 3 to 6		June 13 to 16		July 9 to 12		July 9 to 12	
	0.3-m. pipe	0.9-m. pipe	0.3-m. pipe	0.9-m. pipe	0.3-m. pipe	0.9-m. pipe	0.3-m. pipe	0.9-m. pipe
Minutes	Number of fish		Number of fish		Number of fish		Number of fish	
0.0- 1.9	--	4	1	4	--	10	1	3
2.0- 3.9	2	16	2	11	2	8	2	13
4.0- 5.9	2	5	1	3	2	4	--	4
6.0- 7.9	1	2	--	1	--	--	2	2
8.0- 9.9	--	1	3	2	2	2	--	--
10.0-11.9	1	2	2	--	--	--	1	--
12.0-13.9	1	--	--	1	--	1	--	1
14.0-15.9	1	1	1	--	1	--	--	--
16.0-17.9	--	1	--	--	1	--	--	--
18.0-19.9	--	--	--	2	--	--	--	--
20.0-21.9	--	--	1	--	--	--	--	--
22.0-23.9	1	--	--	--	--	--	1	--
24.0-25.9	1	--	--	--	--	1	1	--
26.0-27.9	--	--	1	--	--	--	--	--
28.0-29.9	--	--	--	--	--	--	--	--
30.0-31.9	--	--	--	--	--	--	--	--
32.0-33.9	--	1	--	--	--	--	--	--
34.0-34.9	--	--	1	--	--	--	--	--
35+	8	--	3	1	3	2	2	1
Total number of fish	18	33	16	25	11	28	10	24
Median (minutes)	24.2	3.1	10.6	3.3	9.4	3.0	8.6	3.3
Lower limit median[1]	7.2	2.4	4.8	2.1	2.5	1.9	2.1	2.6
Upper limit median[1]	41.2	5.2	34.8	5.4	35+	4.4	35+	4.3
Percentage that completed passage	56	100	81	96	73	93	80	96

[1] 95 percent confidence intervals about the median.

the results in 1963 on fish passage through equal lengths of 0.3- and 0.9-m.-diameter pipes (table 4) indicated that fish were influenced by the size of the pipe opening.

In 1964, truncated cones were placed at the downstream entrance to the 0.3- and 0.6-m.-diameter pipes to determine if this type of structure would facilitate entry. The cone on the 0.3-m.-diameter pipe tapered from 0.9 m. to 0.3 m. and on the 0.6-m.-diameter pipe, from 0.9-m. to 0.6-m. Both cones were 3-m. long and took up a greater part of the 4.3-m.-long introductory pool. The pipes were not illuminated except for a small amount of light through the ends.

The effect of a cone-type entrance on fish passage through a pipe system was measured by comparing passage times with and without the cone. Two passage times were obtained--passage through the introductory pool and passage through the pipe. Spring and summer chinook and sockeye salmon and steelhead trout were examined in the 0.3- and 0.6-m. pipe systems.

In the 0.3-m.-diameter pipe system, salmon and trout passed through the introductory pool significantly faster when the cone was attached (table 6). Passage times through the pipe with and without the cone did not differ significantly. An additional advantage of the cone-shaped entrance was indicated by the greater percentage of fish--particularly sockeye salmon and steelhead trout--that entered the pipe within the 45-minute time limit (fig. 6). Percentages of fish that completed passage through the introductory pool with and without the cone were 100 and 60 percent, respectively, for sockeye salmon and 100 and 82 percent for steelhead trout. Percentages of spring and summer chinook salmon that completed passage, however, increased only slightly when the entrance cone was used.

In the 0.6-m.-diameter pipe system, the median passage time through the introductory pool of the three species of test fish was similar under both entrance conditions (table 7), thus indicating that the cone did not materially aid salmon and trout in entering the pipe. The passage times of each fish through the pipe section did not differ significantly under the two entrance conditions.

Illumination

To determine if illumination inside the pipe would improve conditions for fish passage,

Table 5.--Distribution of passage times of individual chinook salmon, sockeye salmon, and steelhead trout in the 0.9-m.-diameter pipe system with abrupt and gradual changes in illumination from pool to pipe at water velocity of 0.6 m.p.s., June-July 1963

Time interval	Summer chinook salmon		Sockeye salmon		Steelhead trout	
	June 17 to 20		July 13 to 16		July 13 to 16	
	Abrupt light change	Gradual light change	Abrupt light change	Gradual light change	Abrupt light change	Gradual light change
Minutes	Number of fish		Number of fish		Number of fish	
0.0- 1.9	4	9	3	5	3	2
2.0- 3.9	11	8	3	5	18	12
4.0- 5.9	4	5	2	1	6	3
6.0- 7.9	6	1	--	1	1	3
8.0- 9.9	1	1	2	1	1	--
10.0-11.9	2	1	--	1	--	--
12.0-13.9	1	1	--	--	--	--
14.0-15.9	--	1	--	--	--	--
16.0-17.9	1	1	--	--	--	--
18.0-19.9	1	3	--	--	--	--
20.0-21.9	1	--	--	--	--	--
22.0-23.9	--	--	--	--	--	--
24.0-25.9	--	--	--	--	--	--
26.0-27.9	--	--	--	--	--	--
28.0-29.9	--	--	--	--	--	--
30.0-31.9	--	--	--	--	--	--
32.0-33.9	--	--	--	--	--	1
34.0-34.9	--	--	--	--	--	--
35+	--	--	--	--	--	--
Total number of fish	32	31	10	14	29	21
Median (minutes)	4.1	3.7	2.6	2.8	3.0	3.3
Lower limit median[1]	3.4	2.5	1.8	1.7	2.4	1.9
Upper limit median[1]	7.2	6.0	8.1	6.2	3.8	7.5
Percentage that completed passage	100	100	100	100	100	100

[1] 95 percent confidence intervals about the median.

Table 6.--Distribution of passage times of individual chinook salmon, sockeye salmon, and steelhead trout through the 4.3-m. introductory pool of the 0.3-m.-diameter pipe with and without a truncated entrance cone, May-August 1964

Time interval	Spring chinook salmon		Summer chinook salmon		Sockeye salmon		Steelhead trout	
	May 7 to 10		June 29 to July 3		June 29 to July 3		July 31 to Aug. 5	
	Velocity (1.3 m.p.s.)		Velocity (0.9 m.p.s.)		Velocity (0.9 m.p.s.)		Velocity (1.3 m.p.s.)	
	Without cone	With cone	Without cone	With cone	Without cone	With cone	Without cone	With cone
Minutes	Number of fish		Number of fish		Number of fish		Number of fish	
0.0- 1.9	3	30	1	17	2	38	6	48
2.0- 3.9	6	7	2	2	1	5	5	10
4.0- 5.9	3	2	4	--	--	--	2	1
6.0- 7.9	1	1	1	2	3	--	1	2
8.0- 9.9	1	--	1	--	--	--	1	--
10.0-11.9	2	--	1	--	--	--	--	--
12.0-13.9	--	--	--	--	--	--	--	3
14.0-15.9	--	--	--	--	--	--	--	--
16.0-17.9	2	--	--	--	--	--	2	--
18.0-19.9	1	--	--	--	--	--	--	--
20.0-21.9	--	--	--	--	--	--	--	--
22.0-23.9	1	--	--	--	--	--	--	--
24.0-25.9	--	--	--	--	--	1	--	--
26.0-27.9	--	--	--	1	--	--	--	--
28.0-29.9	--	--	--	--	--	--	--	--
30.0-31.9	--	--	--	--	--	--	--	--
32.0-33.9	--	--	--	--	--	--	--	--
34.0-35.9	1	1	--	--	--	--	--	--
36.0-37.9	--	--	--	--	--	--	--	--
38.0-39.9	--	--	--	--	--	--	--	--
40.0-41.9	--	--	--	--	--	--	1	--
42.0-43.9	--	1	--	--	--	--	--	--
44.0-44.9	--	1	--	--	--	--	--	--
45+	3	2	1	--	4	--	4	--
Total number of fish	24	45	11	22	10	44	22	64
Median (minutes)	6.0	0.8	4.8	0.8	7.7	0.6	4.0	0.8
Lower limit median[1]	2.9	0.8	3.4	0.4	1.9	0.5	1.4	0.6
Upper limit median[1]	17.6	1.9	11.5	2.0	45+	1.0	16.9	1.1
Percentage that completed passage	88	96	91	100	60	100	82	100

[1] 95 percent confidence intervals about the median.

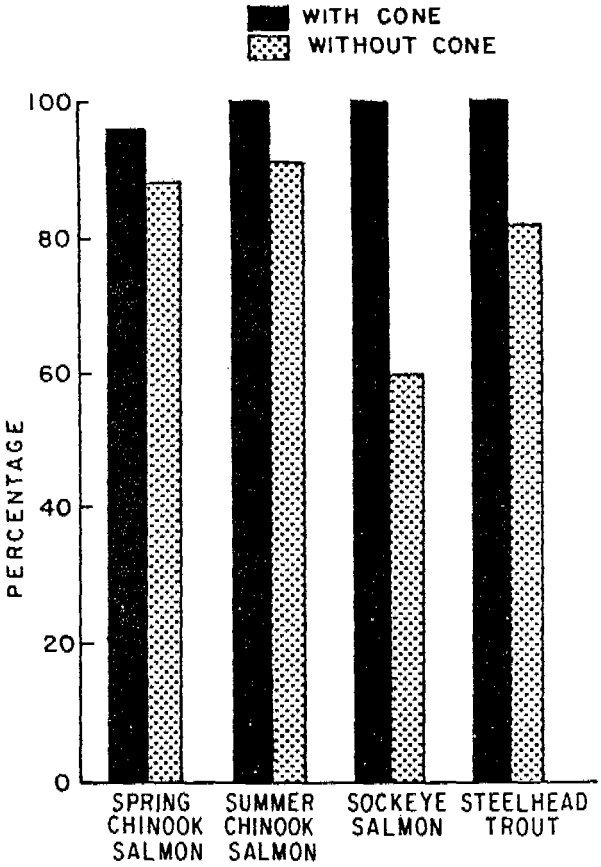

Figure 6.--Percentages of chinook salmon, sockeye salmon, and steelhead trout that completed passage through the introductory pool of the 0.3-m.-diameter pipe with and without the truncated entrance cone, 1964.

a series of tests was made in the 0.6-m.-diameter pipe. Chinook, sockeye, and coho salmon and steelhead trout were tested.

Passage times.--Passage time through the 82.3 m. length of 0.6-m.-diameter pipe (A to B, fig. 5) was used to measure the influence of illumination on fish passage. Water velocity was 0.9 m.p.s.

Passage was generally faster in the illuminated than in the nonilluminated pipe (table 8). Median passage times of fall chinook salmon and steelhead trout were significantly less when the pipe was illuminated than when it was not (5.5 and 9.9 minutes, and 7.0 and 24.4 minutes, respectively). Sockeye and coho salmon also passed through the illuminated pipe faster than through the nonilluminated pipe, but the difference between the median passage times of each species under the two conditions was not significant. In contrast, the median passage time of summer chinook was greater in the illuminated pipe (11.8 minutes) than in the nonilluminated pipe (8.1 minutes); this difference, however, was not statistically significant. No reason can be given for the significant difference in passage times between summer and fall chinook salmon through the illuminated pipe.

Additional tests of the illuminated versus nonilluminated pipes were made to determine the influence of depth of flow on fish passage (discussed later). Water velocity was also 0.9 m.p.s. in these tests, but the pipe was only partly filled.

Median passage time of fall chinook salmon (table 9) was significantly less in the illuminated than in the nonilluminated pipe (5.5 and 15.4 minutes, respectively). Coho salmon also moved through the pipe faster under illumination than without (4.8 and 13.1 minutes, respectively); the small sample size under illumination, however, precludes testing for statistical significance of the difference in passage times.

The response of fall chinook and coho salmon to illumination and nonillumination in a partly full pipe were in general agreement with their response to these same conditions in a full pipe.

Percentages of fish that completed passage.--Percentages of fish in flooded pipes, 0.6-m.-diameter, that completed passage under illuminated and nonilluminated conditions varied considerably by species (fig. 7). A higher percentage of steelhead trout completed passage when the pipe was illuminated than when it was not (98 and 55 percent, respectively). In tests of summer chinook and coho salmon, however, the situation was reversed--higher percentages completed passage when the pipe was not illuminated than when it was (95 and 76 percent, 97 and 76 percent, respectively). About 97 percent of the fall chinook and sockeye salmon completed passage, whether the pipe was illuminated or not.

When the 0.6-m. pipe was partly flooded, higher percentages of fall chinook and coho salmon completed passage through the illuminated pipe than through the nonilluminated pipe (100 and 80 percent, and 100 and 86 percent, respectively, fig. 7). It appears that illumination influences these fish more in a partly filled than in a completely flooded pipe.

Sharp Turns in the Pipe

Response of salmon and trout to 180° turns in the pipe when illuminated and when nonilluminated was evaluated during passage through five sections of a 0.6-m.-diameter pipe, 82.3 m. long. Six electronic detectors recorded the passage times through each of the three straight sections and the two 180° turns which made up the pipe system (fig. 5). This information was collected incidentally during studies on the effect of light on fish passage at a water velocity of 0.9 m.p.s., from June to September 1964. Only fish for which we had a complete sequence of passage times through all five test sections of pipe were used.

Comparison of the rates of passage through the sections (fig. 8) under the illuminated and nonilluminated conditions illustrates that the

Table 7.--Distribution of passage times of individual chinook salmon, sockeye salmon, and steelhead trout through the 4.3-m. introductory pool of the 0.6-m.-diameter pipe with and without a truncated entrance cone, May-August 1964

Time interval	Spring chinook salmon		Summer chinook salmon		Sockey salmon		Steelhead trout	
	May 7 to 10		June 29 to July 3		June 29 to July 3		July 31 to Aug. 5	
	Velocity (0.9 m.p.s.)		Velocity (0.9 m.p.s.)		Velocity (0.9 m.p.s.)		Velocity (1.2 m.p.s.)	
	Without cone	With cone	Without cone	With cone	Without cone	With cone	Without cone	With cone
Minutes	Number of fish		Number of fish		Number of fish		Number of fish	
0.0- 1.9	10	11	11	9	19	12	13	20
2.0- 3.9	8	4	--	1	2	1	1	1
4.0- 5.9	--	1	--	--	1	--	--	--
6.0- 7.9	1	--	--	--	--	1	1	--
8.0- 9.9	--	--	--	--	1	--	--	--
10.0-11.9	--	--	--	--	--	--	--	--
12.0-13.9	--	--	--	--	--	--	--	--
14.0-15.9	--	1	--	--	--	--	--	--
16.0-17.9	--	--	--	1	--	--	--	--
18.0-19.9	--	--	--	--	--	--	--	--
20.0-21.9	--	--	--	--	--	--	--	--
22.0-23.9	--	--	--	--	--	--	--	--
24.0-25.9	--	--	--	--	--	--	--	--
26.0-27.9	--	--	--	--	--	--	--	--
28.0-29.9	--	--	--	--	--	--	--	--
30.0-31.9	--	--	--	--	--	--	--	--
32.0-33.9	--	--	--	--	--	--	--	--
34.0-35.9	--	--	--	--	--	--	--	--
36.0-37.9	--	--	--	--	--	--	--	--
38.0-39.9	--	--	--	--	--	--	--	--
40.0-41.9	--	--	--	--	--	--	--	--
42.0-43.9	--	--	--	--	--	--	--	--
44.0-44.9	--	--	--	--	--	--	--	--
45+	--	--	--	--	--	1	--	1
Total number of fish	19	17	11	11	23	15	15	22
Median (minutes)	1.9	1.1	0.6	0.7	0.5	0.4	0.6	0.5
Lower limit median[1]	0.8	0.7	0.3	0.3	0.3	0.3	0.4	0.4
Upper limit median[1]	2.6	2.2	1.4	2.0	0.8	1.2	1.0	1.2
Percentage that completed passage	100	100	100	100	100	93	100	95

[1] 95 percent confidence intervals about the median.

fish were delayed somewhat by the 180° turns. Rates of passage were faster in the illuminated than in the nonilluminated pipe, except in the third straight section where passage was slightly faster in the nonilluminated pipe. Under both light conditions the fastest passage was in the second straight section of the test pipe.

Water Depth

The object of the tests in 1964 was to determine the influence of a partly filled pipe on fish passage in a 0.6-m.-diameter pipe. Water depth in the partly filled pipe was about 30.5 to 35.6 cm., which left a 25.4 to 30.5 cm. air space; water velocity was 0.9 m.p.s. Salmon and trout were tested in the 82.3-m. pipe with two turns and a straight 27.4-m. length of pipe. Passage times through a flooded and partly full pipe were used to measure the effect of water depth on fish passage.

Passage times of fall chinook salmon and steelhead trout were fastest in the partly filled pipe (table 10). Willingness to enter the pipe was about the same under the partly full or flooded pipe conditions.

Table 8.--Distribution of passage times of individual chinook salmon, sockeye salmon, coho salmon, and steelhead trout through a 0.6-m.-diameter pipe 82.3 m. long under illuminated and nonilluminated conditions; the pipe system included two 180° turns, and water velocity was 0.9 m.p.s., June-September 1964

	Summer chinook salmon		Sockeye salmon		Steelhead trout		Fall chinook salmon		Coho salmon	
	June 25 to 28		July 12 to 15		July 15 to 20		August 28 to 31		Sept. 8 to 11	
	Nonilluminated	Illuminated	Nonilluminated	Illuminated	Nonilluminated	Illuminated	Nonilluminated	Illuminated	Nonilluminated	Illuminated
Minutes	Number of fish		Number of fish		Number of fish		Number of fish		Number of fish	
0.0- 1.9	2	--	1	--	--	--	--	--	--	--
2.0- 3.9	6	--	4	3	--	--	3	9	--	2
4.0- 5.9	6	4	10	13	4	15	6	28	3	4
6.0- 7.9	5	3	3	9	--	16	5	13	3	3
8.0- 9.9	7	3	10	4	1	10	1	4	5	1
10.0-11.9	1	1	5	5	1	3	6	3	1	--
12.0-13.9	4	--	4	3	1	2	3	--	3	--
14.0-15.9	--	1	1	--	2	1	--	1	3	1
16.0-17.9	2	--	1	1	1	1	--	--	--	--
18.0-19.9	--	--	1	--	--	2	--	--	--	--
20.0-21.9	1	1	1	--	1	--	1	--	--	1
22.0-23.9	--	--	--	--	--	--	--	1	1	1
24.0-25.9	1	--	--	--	--	--	--	--	1	--
26.0-27.9	1	--	1	--	--	--	1	1	1	--
28.0-29.9	--	--	--	--	1	1	--	--	1	--
30.0-31.9	--	1	--	--	--	--	1	--	--	--
32.0-33.9	1	--	--	--	--	--	--	--	--	--
34.0-35.9	--	--	--	--	--	--	--	--	--	--
36.0-37.9	--	--	--	--	--	--	--	--	--	--
38.0-39.9	--	1	--	--	--	--	1	--	--	--
40.0-41.9	--	--	--	--	--	--	--	--	--	--
42.0-43.9	--	1	--	--	--	--	1	--	--	--
44.0-44.9	--	--	--	--	--	--	--	--	--	--
45+	2	5	1	1	10	1	1	2	2	4
Total number of fish	39	21	43	39	22	52	30	62	24	17
Median (minutes)	8.1	11.8	8.5	6.9	24.4	7.0	9.9	5.5	11.1	7.2
Lower limit median[1]	5.0	7.2	5.5	5.6	10.0	6.2	6.2	5.0	8.6	5.8
Upper limit median[1]	10.5	43.7	10.2	8.8	45+	8.4	11.8	6.3	15.1	22.0
Percentage that completed passage	95	76	98	97	55	98	97	97	97	76

[1] 95 percent confidence intervals about the median.

Median passage time of fall chinook salmon through the pipe was 19.2 minutes under the flooded condition and 7.1 minutes under the partly filled condition. This difference, although fairly large, was not statistically significant. Percentages of chinook salmon that completed passage were 73 in the full pipe and 85 in the partly full pipe. Median passage time of steelhead trout through the partly filled pipe was significantly faster than through the flooded pipe (13.3 and 30.2 minutes, respectively). Percentages of steelhead trout that completed passage were 100 percent in the partly full pipe and 71 percent in the flooded pipe.

Tests in the 27.4-m. straight section of pipe (table 11) gave results somewhat similar to those in the 82.3-m. pipe, except that fall chinook salmon showed no evidence of moving faster when the pipe was partly full.

Median passage times of chinook salmon through the straight pipe were 1.3 minutes in the partly full and 1.2 minutes in the flooded pipe. The percentage of chinook salmon that

Table 9.--Distribution of passage times of individual chinook and coho salmon through a 0.6-m.-diameter pipe 82.3 m. long, partly filled with water under illuminated and nonilluminated conditions; the pipe system included two 180° turns, and water velocity was 0.9 m.p.s., September 1964

Time interval	Fall chinook salmon		Coho salmon	
	Sept. 13 to 16		Sept. 13 to 16	
	Nonilluminated	Illuminated	Nonilluminated	Illuminated
Minutes	Number of fish		Number of fish	
0.0- 1.9.....	--	1	--	--
2.0- 3.9.....	1	2	--	--
4.0- 5.9.....	1	10	4	4
6.0- 7.9.....	3	5	2	--
8.0- 9.9.....	2	1	--	--
10.0-11.9.....	2	1	1	--
12.0-13.9.....	3	--	--	--
14.0-15.9.....	1	1	1	--
16.0-17.9.....	1	1	1	--
18.0-19.9.....	1	--	--	--
20.0-21.9.....	3	--	3	--
22.0-23.9.....	--	--	--	--
24.0-25.9.....	--	1	--	--
26.0-27.9.....	1	--	--	--
28.0-29.9.....	--	--	--	--
30.0-31.9.....	--	--	--	--
32.0-33.9.....	--	--	--	--
34.0-35.9.....	--	--	--	--
36.0-37.9.....	1	--	--	--
38.0-39.9.....	--	--	--	--
40.0-41.9.....	--	--	--	--
42.0-43.9.....	--	--	--	--
44.0-44.9.....	--	--	--	--
45+.....	5	--	2	--
Total number of fish.....	25	23	14	4
Median (minutes).	15.4	5.5	13.1	4.8
Lower limit median[1].....	10.6	4.8	4.5	--
Upper limit median[1].....	21.9	7.0	21.2	--
Percentage that completed passage.....	80	100	86	100

[1] 95 percent confidence intervals about the median.

Table 10.--Distribution of passage times of individual chinook salmon and steelhead trout in a 0.6-m.-diameter pipe 82.3 m. long under flooded and partly full conditions; the pipe system included two 180° turns, and water velocity was 0.9 m.p.s., September 1964

Time interval	Fall chinook salmon		Steelhead trout	
	Sept. 1 to 4		Sept. 1 to 4	
	Full pipe	Partly full pipe	Full pipe	Partly full pipe
Minutes	Number of fish		Number of fish	
0.0- 1.9.....	--	1	--	--
2.0- 3.9	1	2	--	--
4.0- 5.9.....	2	4	--	--
6.0- 7.9.....	1	4	1	1
8.0- 9.9.....	--	2	1	2
10.0-11.9.....	--	--	--	--
12.0-13.9.....	1	1	1	--
14.0-15.9.....	--	--	--	--
16.0-17.9.....	--	1	--	1
18.0-19.9.....	1	--	--	--
20.0-21.9.....	--	--	--	2
22.0-23.9.....	1	1	--	--
24.0-25.9.....	1	--	--	--
26.0-27.9.....	--	--	--	--
28.0-29.9.....	--	--	--	--
30.0-31.9.....	--	1	1	--
32.0-33.9.....	--	--	1	--
34.0-35.9.....	--	--	--	--
36.0-37.9.....	--	--	--	--
38.0-39.9.....	--	--	--	--
40.0-41.9.....	--	--	--	--
42.0-43.9.....	--	--	--	--
44.0-44.9.....	--	--	--	--
45+.....	3	3	2	--
Total number of fish.....	11	20	7	6
Median (minutes)...	19.2	7.1	30.2	13.3
Lower limit median[1]	4.4	5.1	6.6	6.3
Upper limit median[1]	45+	17.8	45+	21.2
Percentage that completed passage	73	85	71	100

[1] 95 percent confidence intervals about the median.

completed passage, however, was greater in the partly full pipe (100 percent) than in the flooded one (81 percent). Steelhead trout traveled faster in the partly full than in the flooded pipe (1.5 and 7.4 minutes, respectively), but the difference between median passage times was not statistically significant. Percentages of steelhead trout that completed passage were 100 percent in the partly full and 78 percent in the flooded pipe. Median passage time of coho salmon through the partly full pipe (1.6 minutes) was significantly less than their median passage time (7. minutes) through the flooded pipe; percentage that completed passage were 100 in the partl full pipe and 83 in the full pipe.

Comparison of passage times of fall chinoo and coho salmon and steelhead trout throug the 27.4- and 82.3-m. lengths of 0.6-m. diameter pipe indicates that the partly fu pipe offered the best passage condition. Pas sage times were generally faster, and greate percentages of fish completed passage whe the pipe was partly full than when it was ful

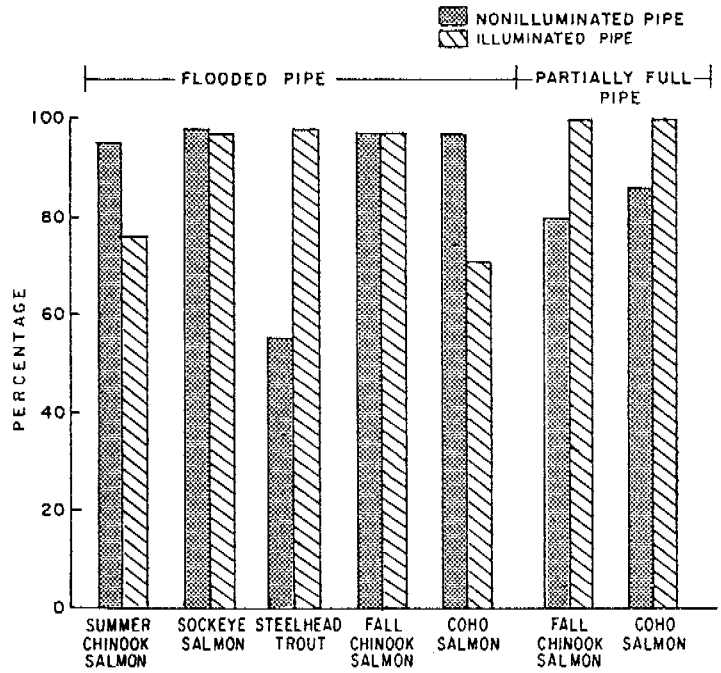

Figure 7.--Percentages of chinook, sockeye, and coho salmon, and steelhead trout that completed passage through flooded and partly full 0.6-m.-diameter pipe (82.3-m.-long) under illuminated and nonilluminated conditions within the 45-minute time limit, 1964. Water velocity in flooded and partly full pipe was 0.9 m.p.s.

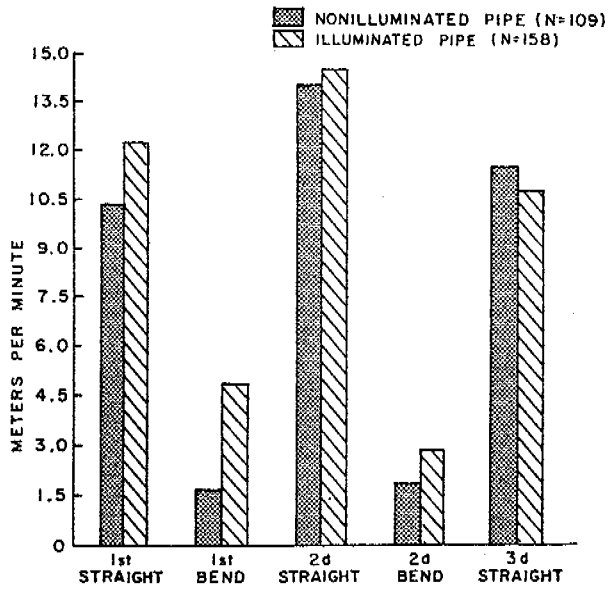

Figure 8.--Rate of passage (meters per minute) by salmon and trout through each section of the 82.3-m.-long 0.6-m.-diameter pipe under illuminated and nonilluminated conditions, at water velocity of 0.9 m.p.s., June-September 1964. Rate of passage is based only on fish for which there is complete sequence of passage times through all five sections of pipe.

Table 11.--Distribution of passage times of individual chinook salmon, coho salmon, and steelhead trout in a 0.6-m.-diameter pipe 27.4m. long under flooded and partly full conditions at a water velocity of 0.9 m.p.s., September 1964

Time interval	Fall chinook salmon		Coho salmon		Steelhead trout	
	Sept. 1 to 4		Sept. 1 to 4		Sept. 1 to 4	
	Flooded pipe	Partly full pipe	Flooded pipe	Partly full pipe	Flooded pipe	Partly full pipe
Minutes	Number of fish		Number of fish		Number of fish	
0.0- 1.9	10	13	1	7	2	9
2.0- 3.9	1	2	1	2	1	3
4.0- 5.9	--	2	--	1	2	1
6.0- 7.9	--	1	1	1	--	2
8.0- 9.9	--	--	2	--	--	--
10.0-11.9	--	--	--	--	1	--
12.0-13.9	2	1	--	--	--	--
14.0-15.9	--	1	--	--	--	--
16.0-17.9	--	1	--	--	--	--
18.0-19.9	--	--	--	--	1	--
20.0-21.9	--	--	--	--	--	--
22.0-23.9	--	1	--	--	--	1
24.0-25.9	--	1	--	--	--	--
26.0-27.9	--	--	--	--	--	--
28.0-29.9	--	--	--	1	--	--
30.0-31.9	--	1	--	--	--	--
32.0-33.9	--	--	--	--	--	--
34.0-35.9	--	--	--	--	--	--
36.0-37.9	--	--	--	--	--	--
38.0-39.9	--	--	--	--	--	--
40.0-41.9	--	--	--	--	--	--
42.0-43.9	--	--	--	--	--	--
44.0-44.9	--	--	--	--	--	--
45+	3	--	1	--	2	--
Total number of fish	16	24	6	12	9	16
Median (minutes)	1.2	1.3	7.7	1.6	7.4	1.5
Lower limit median[1]	0.4	0.5	1.7	0.7	1.1	0.8
Upper limit median[1]	13.3	6.7	45+	5.3	45+	5.0
Percentage that completed passage	81	100	83	100	78	100

[1] 95 percent confidence intervals about the median.

Table 12.--Summary of entries and exits by salmon and trout during capacity tests in a 0.6-m.-diameter pipe 27.4 m. long, at a water velocity of 1.4 m.p.s., September 7 and 8, 1964

Date	Entry of fish					Exit of fish			Species composition		
	Fish entering	Fall backs	Net entry	Average per minute: For 60-minute period	Average per minute: For peak 20-minute period	Net exit	Average per minute: For 60-minute period	Average per minute: For peak 20-minute period	Chinook salmon	Steelhead trout	Coho salmon
	Number	Number	Number	Number	Number	Number	Number	Number	Percent	Percent	Percent
Sept. 7	610	282	328	5.5	10.2	312	5.2	9.8	62.1	26.9	11.0
Sept. 8	1,345	565	780	13.0	17.0	728	12.1	15.6	51.6	41.1	7.3

CAPACITY TESTS

This study was made to determine the maximum number of fish that would pass through a pipe of a given size and length in a unit of time. A 27.4-m.-long pipe, 0.6-m.-diameter, and nonilluminated was operated in a flooded condition at a water velocity of 1.4 m.p.s.; it was installed in the position occupied by the 0.3-m.-diameter pipe shown in figure 5.

Two 60-minute tests were made: the first on September 7, 1964, with fish collected for about one-half day, and the second on September 8, 1964, with fish collected all day. Peak passage for a 20-minute period averaged 15 fish per minute (table 12). Test fish were predominantly fall chinook salmon and steelhead trout; some were coho salmon.

The two tests did not yield enough data for us to draw dependable conclusions on pipe capacity, but it appears that a 0.6-m.-diameter pipe, 27.4-m.-long, can pass 800 to 900 salmon and trout per hour.

SUMMARY AND CONCLUSIONS

A study was made on passage of adult salmon and trout through pipes at Bonneville Dam on the Columbia River during the 1963 and 1964 migration seasons. The factors tested were water velocity, pipe diameter and length, entrance and exit conditions, illumination, water depth, and carrying capacity. Passage times through the pipes were used to evaluate the performance of chinook, sockeye, and coho salmon and steelhead trout.

The pipe installations differed during the two seasons. In 1963, two 30.5-m. lengths of straight pipe of 0.3- and 0.9-m.-diameter were used. In 1964, the pipe systems were of straight 27.4-m. lengths of 0.3- and 0.6-m.-diameter, and a 0.6-m.-diameter pipe, 82.3 m. long, with two 180° turns. Water velocities in the pipes for the 2 years ranged from 0.15 to 1.4 m.p.s.

Results of the Tests

Fourteen principal facts emerge from the tests:

1. In the 0.3-m.-diameter pipe, with water velocities of 0.3, 0.6, and 1.2 m.p.s., chinook and sockeye salmon passed through most rapidly at the 1.2 m.p.s. velocity and steelhead trout at 0.6 m.p.s.

2. In the 0.6-m. pipe, with water velocities of 0.3, 0.6, and 0.9 m.p.s., chinook salmon passed through most rapidly at 0.9 m.p.s., sockeye salmon at 0.3 m.p.s., and steelhead trout at 0.6 m.p.s.

3. In the 0.9-m.-diameter pipe, at water velocities of 0.15, 0.3, and 0.6 m.p.s., chinook and sockeye salmon and steelhead trout passed through most rapidly at 0.3 m.p.s.

4. Chinook and sockeye salmon and steelhead trout passed through a 0.9-m.-diameter pipe more readily than through a 0.3-m. pipe.

5. Gradual and abrupt changes in illumination in the introductory and exit pools did not appear to affect fish passage through the 0.9-m.-diameter pipe system.

6. The use of a truncated cone as a transition zone from pool to pipe increased the speed of entry of chinook and sockeye salmon and steelhead trout into the 0.3-m.-diameter pipe but had no effect on entry of these fish into the 0.6-m.-diameter pipe.

7. Steelhead trout and fall chinook, sockeye, and coho salmon moved through the flooded 0.6-m.-diameter pipe more rapidly with illumination than without. Summer chinook salmon moved fastest in a nonilluminated pipe.

8. Fall chinook and coho salmon passed through a partly filled 0.6-m.-diameter pipe faster with illumination than without.

9. The percentage of fish that completed passage through a flooded 0.6-m.-diameter pipe was greater with illumination than without for steelhead trout, but greater without illumination for summer chinook and coho salmon. Fall chinook and sockeye salmon had about the same percentage of terminations irrespective of illumination.

10. When the 0.6-m. pipe was partly full of water, higher percentages of fall chinook and sockeye salmon completed passage through an illuminated than a nonilluminated pipe.

11. Passage of fish was delayed by 180° turns in the 0.6-m. pipe.

12. Steelhead trout and fall chinook salmon moved through the 0.6-m.-diameter pipe, 82.3 m. long, faster when it was partly full of water than when it was full.

13. Movement of coho salmon and steelhead trout through a 0.6-m.-diameter pipe 27.4 m. long was faster in a partly filled than in a flooded pipe. Movement of fall chinook salmon was apparently unaffected by the two water levels in the pipe.

14. It appears that 800 to 900 salmon and trout per hour can pass through a 0.6-m.-diameter pipe, 27.4 m. long.

Conclusions

Three conclusions are made:

1. Salmon and trout will pass through pipes without internal illumination (including pipes with 180° turns and up to 82.3 m. long).

2. Of the four species tested (chinook, sockeye, and coho salmon and steelhead trout), only steelhead trout appeared to benefit appreciably by illumination in pipes.

3. For practical purposes, a pipe with a diameter of 0.6 m., flooded or partly full of water, is used by all salmon and trout. Salmon and trout will not readily enter a 0.3-m.-diameter pipe unless special conditions of water velocity and transition from pool to pipe are provided.

ACKNOWLEDGMENTS

The late Joseph R. Gauley helped plan the experiments and made helpful suggestions on test procedures. Robert J. Holcomb gave advice on hydraulics that contributed to the design of the pipe system.

LITERATURE CITED

COLLINS, GERALD B., and CARL H. ELLING.
1960. Fishway research at the Fisheries-Engineering Research Laboratory. U.S. Fish Wildl. Serv., Circ. 98, 17 pp.

DIXON, WILFRID J., and FRANK J. MASSEY, JR.
1957. Introduction to statistical analysis. 2d ed. McGraw-Hill Book Company, New York, 488 pp.

JOHNSON, JAMES H.
1966. Fallback of adult chinook salmon at Ice Harbor Dam spillway, May 1964. U.S. Army, Corps of Eng. (Portland, Oreg.), Third Progr. Rep. on Fish.-Eng. Res. Program, pp. 67-90.

U.S. ARMY CORPS OF ENGINEERS.
1948. Annual report, passage of fish over Bonneville Dam, Columbia River, Oregon and Washington. U.S. Army Corps of Eng., Off. Dist. Eng., Portland, Oreg., 21 pp.
1951. Annual report, passage of fish over Bonneville Dam, Columbia River, Oregon and Washington. U.S. Army Corps of Eng., Off. Dist. Eng., Portland, Oreg., 36 pp.

MS. #1928

GPO 881-157