Transactions of the American Fisheries Society 133:1472–1479, 2004
© Copyright by the American Fisheries Society 2004

An Evaluation of the Use of Critical Swimming Speed for Determination of Culvert Water Velocity Criteria for Smallmouth Bass

STEPHAN PEAKE*

Department of Biology, University of New Brunswick, Fredericton, New Brunswick E3B 6E1, Canada

Abstract.—Critical swimming speed (U_{crit}) is a common measure of the relationship between exercise intensity and duration within the prolonged performance envelope. This relationship is often used to establish water velocity criteria for fishways and culverts; however, the technique involves the assumptions that fish will choose to move at (1) a swimming speed equivalent to U_{crit} and (2) a ground speed that results in a passage time equal to the interval used in the critical speed protocol. The objective of this study was to evaluate the validity of these assumptions and the usefulness of velocity criteria based on critical speed data in predicting passage success. To accomplish this, I measured the critical swimming speed of wild smallmouth bass *Micropterus dolomieu* in a respirometer and the relationship between the water velocity and swimming speed of fish in a 50-m raceway. The latter was then used in conjunction with the former to calculate water velocity criteria based on ground speeds actually attained by fish, thereby eliminating the second assumption. Critical swimming speeds ranged from 65 to 98 cm/s and were positively correlated to fish length (24–44 cm). Swimming speeds attained by free-swimming fish in the raceway increased significantly with water velocity. Maximum allowable water velocities for raceway fish (adjusted appropriately for expected swimming speed) ranged from 54 to 63 cm/s, depending on fish length. Despite this, the proportion of individuals that made complete ascents against water velocities ranging from 40 to 120 cm/s was high (82–95%), and the probability of a successful ascent did not change significantly with water velocity, fish length, water temperature, exposure time, or time in captivity. As such, it is concluded that critical speed should not be used to set culvert water velocity criteria for this species.

The vast majority of information relating to the swimming capacity and exercise physiology of fish has been generated by studying individuals forced to perform in swim tunnel respirometers (Hammer 1995). As a result of this work, it is generally accepted that the overall performance envelope can be divided into three main swimming categories: sustained, prolonged, and burst (Beamish 1978). Sustained swimming occurs at relatively low speeds, and can be maintained for long periods (>200 min) without interruption or failure as the energy used to support this activity is generated through aerobic metabolic pathways. The highest velocity that can be maintained aerobically is called maximum sustained speed. Prolonged swimming involves moderate speeds that require some anaerobic energy and, therefore, ends in fatigue after 20 s to 200 min (Beamish 1978). Finally, high-speed locomotion is classified as burst swimming, an activity that is exclusively anaerobic and relatively short-lived (<20 s).

Critical swimming speed (U_{crit}) is a special category of prolonged swimming first introduced by Brett (1964). The protocol is carried out on fish enclosed in a swim tunnel respirometer, during which subjects are forced to maintain position against a particular water velocity for a set time interval. Water velocity (and therefore swimming speed) is then increased by a set increment until the individual fails to swim for an entire time interval. Critical swimming speed is calculated as the sum of the penultimate velocity attained and a fraction of the velocity increment proportional to the time spent swimming at the final velocity relative to the full time interval (Brett 1964). Although U_{crit} has often been used to estimate maximum sustained speed, it has also been defined as the highest swimming speed that a fish can maintain for a period equal in magnitude to the time interval used in the test (Peake et al. 1997). Time intervals as low as 2 min and as high as 60 min have been used in these trials, although values between 20 and 30 min are most common (Beamish 1978).

One of the practical applications of critical swimming speed data is related to the establishment of water velocity criteria for fishways and culverts (Jones et al. 1974). For example, if U_{crit}

* Corresponding author: speake@unb.ca

Received November 9, 2003; accepted May 24, 2004

(using 30-min time intervals) f
were found to be 50.0 cm/s, it w
that the animal could swim at 5
up to 1,800 s (30 min × 60
criteria for a 50-m culvert we
the fish were to swim for 30 mi
the speed of the individual relati
would be 2.8 cm/s (5,000 cm/1.
were to swim at 50.0 cm/s (i.e.,
speed), water velocity in the cu
ceed 47.2 cm/s (50.0 cm/s −
animal would fatigue prior to exit
Therefore, the maximum allowa
for that culvert would be 47.2
dure, however, makes two impo
The first is that fish will choo
regardless of the water velocit
with, and the second is that
ground speed that results in a
will not exceed that used in the
tocol. Clearly, these assumption
however, since almost no inform
on how fast fish swim when f
containing various water veloci
commonly used to establish wat
for lack of a better alternative.

The overall objective of this s
uate the assumptions made in e
velocity criteria and assess the
teria to accurately predict fish p
realistic conditions. This was ac
measuring the critical swimmin
mouth bass *Micropterus dolom*
time intervals, (2) establishing
ship between water velocity an
for free-swimming individuals,
lationship to calculate maximu
velocity without the assumptio
speed and passage time, and
ability of this newly calculated
fish passage through a 50-m exp

Methods

Experimental animals.—Sm
collected from the Winnipeg
October 2000 and May to S
means of angling gear and tr
caught quickly with minimal
transported in an aerated live
(<1 km) to the Canadian Riv
Manitoba Field Station in Pina
ada. Individuals were housed
2,000-L aquarium constantly
from the Winnipeg River at a ra

(using 30-min time intervals) for a particular fish were found to be 50.0 cm/s, it would be expected that the animal could swim at 50.0 cm/s for periods up to 1,800 s (30 min × 60 s/min). If velocity criteria for a 50-m culvert were required, and if the fish were to swim for 30 min during the ascent, the speed of the individual relative to the ground would be 2.8 cm/s (5,000 cm/1,800 s). If the fish were to swim at 50.0 cm/s (i.e., critical swimming speed), water velocity in the culvert could not exceed 47.2 cm/s (50.0 cm/s − 2.8 cm/s), or the animal would fatigue prior to exiting the structure. Therefore, the maximum allowable water velocity for that culvert would be 47.2 cm/s. This procedure, however, makes two important assumptions. The first is that fish will choose to swim at U_{crit} regardless of the water velocity they are faced with, and the second is that fish will choose a ground speed that results in a passage time that will not exceed that used in the critical speed protocol. Clearly, these assumptions cannot be valid; however, since almost no information is available on how fast fish swim when faced with culverts containing various water velocities, U_{crit} data are commonly used to establish water velocity criteria for lack of a better alternative.

The overall objective of this study was to evaluate the assumptions made in establishing culvert velocity criteria and assess the ability of these criteria to accurately predict fish passage under more realistic conditions. This was accomplished by (1) measuring the critical swimming speed of smallmouth bass *Micropterus dolomieu* using 30-min time intervals, (2) establishing the true relationship between water velocity and swimming speed for free-swimming individuals, (3) using this relationship to calculate maximum allowable water velocity without the assumption related to ground speed and passage time, and (4) evaluating the ability of this newly calculated metric to predict fish passage through a 50-m experimental raceway.

Methods

Experimental animals.—Smallmouth bass were collected from the Winnipeg River from April to October 2000 and May to September 2001 by means of angling gear and trap nets. Fish were caught quickly with minimal air exposure and transported in an aerated live well a short distance (<1 km) to the Canadian Rivers Institute (CRI) Manitoba Field Station in Pinawa, Manitoba, Canada. Individuals were housed at the station in a 2,000-L aquarium constantly supplied with water from the Winnipeg River at a rate of approximately

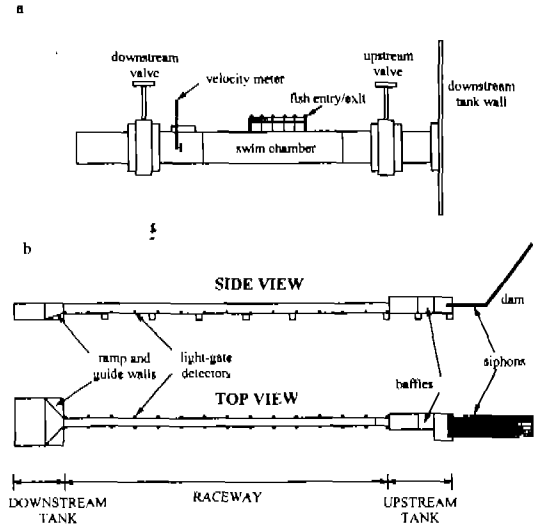

FIGURE 1.—Diagrammatic representations (not to scale) of the (a) respirometer and (b) raceway used in this study.

0.5 L/s. Smallmouth bass were always allowed at least 24 h of recovery time before being used in an experiment. Based on several literature accounts for this (and related) species (Schreer et al. 2001; Cooke et al. 2003; Peake and Farrell 2004), this period of time was considered sufficient to allow individuals to recover from physiological and cardiovascular disturbances associated with stress, air exposure, and exhaustive exercise. Fish were not fed and were, therefore, in a postabsorptive state during all experiments. Individuals were always tested and released within 7 d of capture to avoid stress from prolonged captivity.

Critical swimming speed experiments.—The swim tunnel respirometer used in the U_{crit} experiments was fashioned from a 1.5-m-long section of Plexiglas pipe with an inside diameter of 20 cm (Figure 1a). The upstream end of the pipe was fastened to the side of the downstream tank of the experimental raceway (Figure 1b). Water flowed by gravity (head differential was approximately 60 cm) from the downstream tank through a butterfly valve, past the upstream retention screen of the swim chamber, through the swim chamber (approximately 90 cm in length), past the downstream retention screen and a propeller-driven velocity meter (Swoffer Model 2100, Forestry Suppliers, Inc.), through another butterfly valve, and into the Pinawa Channel. The upstream valve of the respirometer controlled the volume of water that entered the device, while the downstream valve was used to adjust water velocity. Fish were introduced

and removed though an opening on the top, which could be left open or sealed with a Plexiglas lid fitted with a rubber O-ring (Figure 1a). During experiments, the entire apparatus, except for the opening through which fish were introduced and removed, was covered with black plastic to ensure the fish did not become startled or distracted by outside activity.

The critical swimming speed of smallmouth bass was measured by placing fish in the respirometer, setting the water velocity at 30 cm/s, and allowing them to acclimate for at least 8 h. Following acclimation, individuals were exposed to stepwise increases in velocity (V_i; 15 cm/s) for every 30 min (t_i) of continuous swimming until fatigue occurred. Fatigue was assessed when fish became impinged on the downstream screen of the respirometer for 5 s. The highest speed maintained for a complete time interval (V_p), and endurance at the final velocity (t_f), were then substituted into the following equation:

$$U_{crit} = V_p + (t_f \times V_i)/t_i. \quad (1)$$

Immediately after the critical speed determinations, fish were anesthetized in a 60 mg/L clove oil–ethanol solution (Peake 1999) and measured for length and mass. Individuals were then either (1) placed in a separate tank (and therefore did not need to be marked or tagged), rested for at least 24 h, and used in a single raceway experiment or (2) released immediately into the Winnipeg River.

Raceway experiments.—These experiments were performed in a wood frame, plywood-covered apparatus constructed at the CRI Manitoba Field Station in Pinawa, Manitoba (Figure 1b). Water was siphoned into the structure from the upstream side of a small diversion dam by gravity (head differential was approximately 4 m) through six polyvinyl chloride (PVC) pipes (diameter = 20 cm) fitted with butterfly valves at each end. The volume of water entering the system through each pipe (and therefore water velocity) was controlled using the downstream valves. Water from the siphons entered the upstream tank of the structure (1.2 m wide, 2.4 m long, 2.4 m deep) and moved through another tank (1.2 m wide, 1.2 m long, 1.2 m deep) containing a series of baffles designed to minimize turbulence and straighten the flow. Baffles covered the entire cross-sectional area of this tank, and consisted of horizontally stacked PVC pipes (20 cm long, 8 cm diameter). Water then moved into another tank (1.2 m wide, 2.4 m long, 1.2 m deep), which served as a rest area for fish that successfully ascended the raceway (Figure 1b). This tank emptied into the raceway (50.0 m long, 0.6 m wide, 0.8 m deep), which was equipped with plywood covers to provide overhead shade. The raceway terminated at the downstream tank, which was approximately 3.6 m long, 3.6 m wide, and 1.2 m deep. Water moving through the downstream tank exited the system through a sluice gate built into the back wall. The height of the sluice gate could be adjusted via a hand-cranked winch to fine-tune water depth and velocity.

To facilitate entry of fish into the raceway, the downstream tank was outfitted with guide walls that extended from the raceway entrance to the sides of the tank at an angle of approximately 30° (Figure 1b). In addition, a ramp was placed in the downstream tank that extended from the floor to the raceway entrance, creating an incline of approximately 15°. The floor of the raceway was approximately 30 cm higher than that of the tank so that the system could be emptied without inadvertently stranding the test subjects. Water velocity was set using a propeller-driven flowmeter identical to that used in the critical speed tests. Preliminary trials indicated that smallmouth bass generally swam near the bottom of the raceway. Consequently, the flowmeter was placed approximately 8 cm from the bottom to reflect the water speed directly experienced by the fish.

Activity in the raceway was monitored by means of an array of 15 custom-designed and custom-built light gate sensors placed on the outside walls of the raceway at 3.6-m intervals along its length (Figure 1b). The system was conceptually similar to that described by Nelson et al. (2002), with several modifications to make it weatherproof and reduce power consumption (power was supplied by 12-V marine batteries). Technical details on the system can be obtained by contacting the electronics shop at Simon Fraser University, Burnaby, British Columbia, Canada. Briefly, a single light gate station consisted of a Plexiglas-encased circuit board equipped with a red light emitting diode. This emitter was placed on the outside wall of the raceway, against a Plexiglas window recessed into the plywood wall. Focused red light was pulsed at a rate of 5 Hz and traveled 60 cm through the raceway to another Plexiglas window placed on the opposite wall. A Plexiglas-encased detector was mounted against this window (on the outside wall of the raceway). Fish moving past a light gate station would block light from reaching the sensor, which changed the pulse rate. When this occurred, a custom-designed processor/data logger would re-

TABLE 1.—Details pertaining to
speed (U_{crit}), swim speed, and asse

Variable
N
Mean fish length, cm
Fish length range, cm
Mean fish mass, g
Fish mass range, g
Mean temperature
Temperature range
Mean captivity time,
Captivity time range,

cord the identity of the sensor
blocked and at what time (to
The time required for a fish
sensor to the next was used t
speed for that interval. Thus,
yielded 14 individual ground s
averaged and added to the wa
termine mean swimming speed
resolution of the light gate sys
and the swimming speed data
parable to that collected by a s
era system (see Peake and Far

During raceway experimen
was set at 40, 60, 80, 100, or 12
speed attainable). Test subjects
the 2,000-L holding tank and p
stream tank. Fish were then allo
throughout the system for a ran
ranging from 0.5 to 39.5 h. As
to determine the outcome of t
test was discontinued and inf
data logger was downloaded,
exposure period was arbitrary

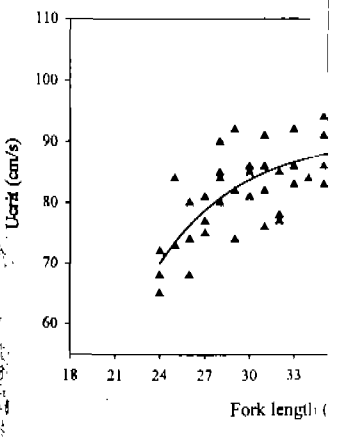

FIGURE 2.—The relationship be
ming speed (U_{crit}) and fork length

TABLE 1.—Details pertaining to fish length, mass, water temperature, and time in captivity for critical swimming speed (U_{crit}), swim speed, and ascent success experiments.

Variable	U_{crit} experiments	Raceway swim speed experiments	Raceway success experiments
N	51	169	127
Mean fish length, (cm)	32.3	36.6	36.5
Fish length range, (cm)	24–44	27–47	27–47
Mean fish mass, (g)	536	793	778
Fish mass range, (g)	114–1188	272–1498	272–1448
Mean temperature, (°C)	19.8	15.6	15.8
Temperature range, (°C)	17.5–21.0	11.0–21.0	11.0–21.0
Mean captivity time, (d)	3	3	3
Captivity time range, (d)	1–7	1–7	1–7

cord the identity of the sensor (1–15) that had been blocked and at what time (to the nearest 0.01 s). The time required for a fish to move from one sensor to the next was used to calculate ground speed for that interval. Thus, a complete ascent yielded 14 individual ground speeds, which were averaged and added to the water velocity to determine mean swimming speed. The accuracy and resolution of the light gate system was evaluated, and the swimming speed data yielded was comparable to that collected by a separate video camera system (see Peake and Farrell 2004).

During raceway experiments, water velocity was set at 40, 60, 80, 100, or 120 cm/s (the highest speed attainable). Test subjects were removed from the 2,000-L holding tank and placed in the downstream tank. Fish were then allowed to move freely throughout the system for a random period of time ranging from 0.5 to 39.5 h. As there was no way to determine the outcome of the trial before the test was discontinued and information from the data logger was downloaded, the duration of the exposure period was arbitrary and not influenced by the occurrence (or number) of attempts or ascents. After this, water was drained from the raceway and fish were removed and released, or segregated and kept for use (after a 24-h rest period) in one additional raceway experiment conducted at a different water velocity. Data from all complete ascents made during the exposure periods were used in swimming speed determination experiments. Fish that were able to fully ascend the raceway at least once during the exposure period were considered to have been successful.

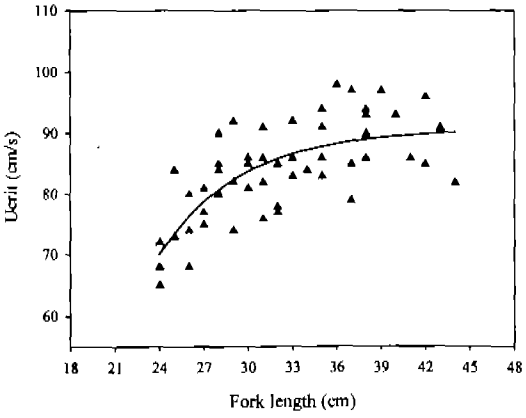

FIGURE 2.—The relationship between critical swimming speed (U_{crit}) and fork length for smallmouth bass.

Statistical analysis.—The relationships between (1) critical swimming speed, fish length, and water temperature and (2) water velocity and mean swimming speed were assessed using regression analysis. The models ultimately selected were the simplest forms that resulted in the highest coefficients of determination. The relationship between mean swimming speed, water temperature, fish length, and time in captivity at each water velocity tested was determined using backward, stepwise regression analysis. The relationship between the probability of a successful raceway ascent and fish length, water temperature, water velocity, time in captivity, and exposure duration was assessed using logistic regression analysis. Statistical significance was indicated by P-values of 0.05 or less. All analyses were performed using NCSS statistical software (Hintze 2001).

Results

Critical Swimming Speed Experiments

The length and mass of smallmouth bass used in these experiments are given in Table 1. Critical speed increased significantly with fork length ($F = 27.5$, df = 51, $P < 0.001$, $r^2 = 0.53$; Figure 2) according to the following three-parameter Hill function:

$$y = \frac{91.25x^{5.49}}{19.29^{5.49} + x^{5.49}}, \qquad (2)$$

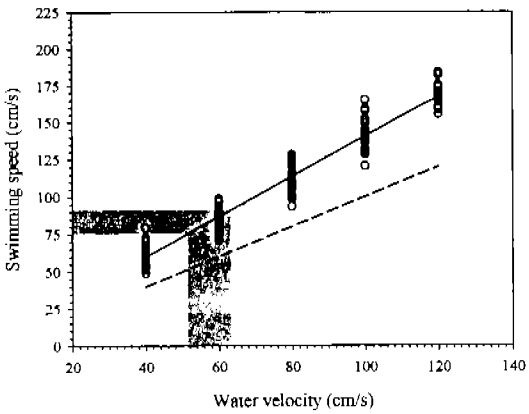

FIGURE 3.—The relationship between swimming speed and water velocity for smallmouth bass in the raceway. The dashed line indicates the swimming speed required to attain a positive ground speed. The shaded area represents the range of maximum water velocities that would allow fish (27–47 cm) to pass a 50-m raceway assuming that U_{crit} is not exceeded.

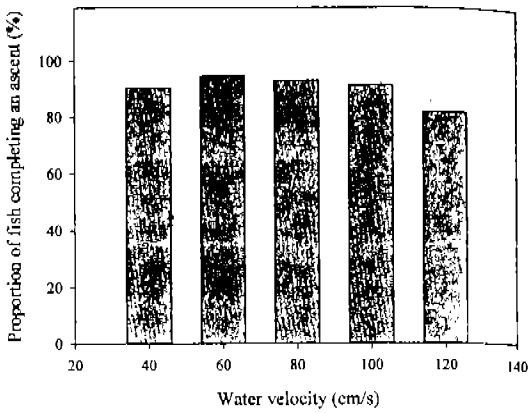

FIGURE 4.—The proportion of smallmouth bass that were able to make at least one complete ascent for the water velocities tested in the raceway.

where y is critical speed (cm/s), and x is fork length (cm); U_{crit} was not correlated to time in captivity or water temperature over the range tested (17.5–21.0°C).

Raceway Experiments

The length and mass of smallmouth bass used in these experiments are given in Table 1. The swimming speed in fish exposed to water moving at 40 cm/s in the raceway increased significantly with water temperature (F-to-remove = 11.35, df = 40, $P = 0.02$, $r^2 = 0.22$), but not with fish length (F-to-remove = 0.65, df = 40, $P = 0.43$) or time in captivity (F-to-remove = 3.0, df = 40, $P = 0.09$). The swimming speed in fish exposed to flows of 60 cm/s also increased significantly with water temperature (F-to-remove = 27.62, df = 19, $P < 0.001$, $r^2 = 0.58$), but not with fish length (F-to-remove = 0.005, df = 19, $P = 0.94$) or time in captivity (F-to-remove = 0.76, df = 19, $P = 0.39$). Swimming speed and water temperature, fish length, and time in captivity were not significantly correlated at any of the other water speeds tested.

Overall, swimming speed in the raceway increased with water velocity ($F = 2{,}854$, df = 161, $P < 0.001$, $r^2 = 0.95$; Figure 3), according to the following linear model:

$$y = 6.17 + 1.34x, \quad (3)$$

where y is swimming speed (cm/s), and x is water velocity (cm/s).

The proportions of smallmouth bass that were able to complete at least one ascent, relative to those that did not fully ascend the raceway, ranged from 82% to 95% (Figure 4). Logistical regression analysis indicated that the probability of the occurrence of a successful ascent was not significantly correlated to fish length (Wald Z-value = −1.19, $P = 0.23$), water temperature (Wald Z-value = −0.81, $P = 0.42$), water velocity (Wald Z-value = 0.91, $P = 0.36$), time in captivity (Wald Z-value = −0.91, $P = 0.36$), or exposure duration (Wald Z-value = 0.37, $P = 0.71$).

Discussion

The first objective of this study was to measure the critical swimming speed of wild smallmouth bass. Estimates of U_{crit} ranged from 65 to 98 cm/s and were positively correlated to fish length. Similar findings were reported by Bunt et al. (1999), who found that critical speed (using 10-min intervals) of similarly sized wild smallmouth bass (tested at 15–20°C) increased with fish size and ranged from 63 to 85 cm/s. Cooke and Bunt (2001) also measured U_{crit} of 31-cm wild smallmouth bass at 17°C using even shorter (5-min) intervals and reported a somewhat higher mean critical speed of 111 ± 6 cm/s (SE). This latter finding is not particularly surprising as short intervals tend to result in higher estimates of critical speed (Farlinger and Beamish 1977). The positive relationship between U_{crit} and fish length in the present study is also typical, although a similar correlation with water temperature is generally reported (Beamish 1978). The lack of this correlation here was likely related to the narrow range of water temperatures (17.5–21.0°C) over which fish were tested.

My second objective was to
relationship between water ve
speed for free-swimming sma
this study is among the first to
data on voluntary swimming
fish moving through a culv
against water velocities of var
terestingly, mean ground speeds
minus water velocity) maintain
bass during ascents in the racew
water velocity (Figure 3), whi
comitant decrease in passage ti
rell (2004) also reported that sm
hibited this behavior in a 25-m
postexercise oxygen consumpti
ical data to argue that individu
speeds may have been trading
for duration, a strategy that al
serve anaerobic energy stores
debt.

The third objective of this st
relationship between swimmi
velocity (equation 3 in conjun
ical speed model [equation 2])
applicable water velocity criter
mentioned previously, critical
provides an indication of the
speed that a fish can maintai
(and including) the magnitude
used in the protocol (Bunt et a
it must be stressed that these
formation pertaining to end
speeds. This means that it is in
whether successful passage w
chooses to exceed its critical s
cent. Consequently, adherenc
"speed limit" is a central ass
passage models based on U_{crit}
straint in mind, field-applicable
teria can now be established fo
For example, critical speeds
cm) and largest (47 cm) fish u
experiments are 78 and 91
(equation 2). However, in a ra
these fish would only attain
speeds when faced with water
63 cm/s, respectively (Figure 3
speeds between 54 and 63 cm
reasonable velocity criteria
smallmouth bass.

The final objective of this st
the ability of culvert water vel
on U_{crit} data, corrected appro
speed, to predict the capacity

My second objective was to establish the true relationship between water velocity and swimming speed for free-swimming smallmouth bass, and this study is among the first to provide quantitative data on voluntary swimming speeds attained by fish moving through a culvert-like structure against water velocities of varying intensity. Interestingly, mean ground speeds (swimming speed minus water velocity) maintained by smallmouth bass during ascents in the raceway increased with water velocity (Figure 3), which resulted in a concomitant decrease in passage time. Peake and Farrell (2004) also reported that smallmouth bass exhibited this behavior in a 25-m raceway, and used postexercise oxygen consumption and physiological data to argue that individuals moving at high speeds may have been trading exercise intensity for duration, a strategy that allowed fish to conserve anaerobic energy stores and reduce oxygen debt.

The third objective of this study was to use the relationship between swimming speed and water velocity (equation 3 in conjunction with the critical speed model [equation 2]) to establish field-applicable water velocity criteria for culverts. As mentioned previously, critical swimming speed provides an indication of the highest swimming speed that a fish can maintain for periods up to (and including) the magnitude of the time interval used in the protocol (Bunt et al. 1999). However, it must be stressed that these data provide no information pertaining to endurance at higher speeds. This means that it is impossible to predict whether successful passage will occur if a fish chooses to exceed its critical speed during an ascent. Consequently, adherence to this artificial "speed limit" is a central assumption in culvert passage models based on U_{crit} data. With this constraint in mind, field-applicable water velocity criteria can now be established for smallmouth bass. For example, critical speeds for the smallest (27 cm) and largest (47 cm) fish used in the raceway experiments are 78 and 91 cm/s, respectively (equation 2). However, in a raceway (or culvert) these fish would only attain these swimming speeds when faced with water velocities of 54 and 63 cm/s, respectively (Figure 3). Therefore, water speeds between 54 and 63 cm/s should represent reasonable velocity criteria for free-swimming smallmouth bass.

The final objective of this study was to evaluate the ability of culvert water velocity criteria based on U_{crit} data, corrected appropriately for ground speed, to predict the capacity of smallmouth bass to move through an actual 50-m raceway. Results of this study clearly indicate that these criteria (54–63 cm/s) did not accurately predict threshold water velocities for this species under the conditions tested (Figure 4). Indeed, smallmouth bass, regardless of size and water temperature, were able to successfully ascend the raceway against water currents moving at more than twice those of the predicted thresholds. While it could be argued that U_{crit} tests involving intervals closer to the passage times demonstrated by fish in the present study (1.4–4.2 min) might yield higher critical speeds and more appropriate velocity criteria, Cooke and Bunt (2001) used 5-min time intervals and reported that the mean critical speed of smallmouth bass tested at 17°C was 111 cm/s. This swimming speed would have been attained in the raceway in response to a water velocity of about 78 cm/s (Figure 3). This value, although better, still does not predict a reasonable maximum allowable water velocity based on the results of this study (Figure 4). If this finding is general and not specific to smallmouth bass, it may not be possible to adjust critical speed data, or the protocol, to address the issue. Clearly, additional work on other species and efforts to develop and evaluate new swimming performance protocols are warranted.

This is not the first study to show that forced swimming performance data can underestimate voluntary locomotory capacity and behavior of fish in the field. Mallen-Cooper (1992) used a small experimental fishway to study the passage performance of juvenile Australian bass *Macquaria novemaculeata* and barramundi (also known as barramundi perch) *Lates calcarifer* and found that fish were able to swim faster in the fishway than would have been predicted by flume studies. Peake (2004) also found that water speeds that resulted in swimming failure in respirometer-confined juvenile northern pike *Esox lucius* were lower than those that resulted in impingement on an experimental irrigation intake screen.

The simplest explanation for the lack of agreement between U_{crit}-based velocity criteria and the raceway data in this study is that critical swimming speed does not accurately describe the relationship between swimming speed and endurance for smallmouth bass. Although this finding, if general in nature, would invalidate many assumptions currently made by researchers studying fish locomotion, it is worth noting that it has never been proven that the relationship between swimming speed and time to fatigue actually holds for fish outside of a swim tunnel respirometer. Elucidation

of why this relationship does not appear to hold for smallmouth bass awaits further investigation; however, it is likely that causation is associated with (1) the behavioral refusal of confined fish to swim to complete physiological exhaustion, as has been demonstrated by various authors for several species (Tarby 1981; Reidy et al. 1995; Swanson et al. 1998), and/or (2) differences in the energetic costs associated with confined and unconfined swimming. Fish exercising in respirometers are generally exposed to straightened flows described as "uniformly microturbulent" (Plaut and Gordon 1994), conditions that probably do not occur often in nature or in fishways and corrugated or baffled culverts. Although turbulence has recently been shown to increase the energetic costs of locomotion in fish (Enders et al. 2003), such a difference would tend to lead to an overestimation of free-swimming capacity, rather than the underestimation observed here. Fish in turbulent water have also been shown to reduce their energetic expenditure in turbulent water, both in the laboratory (Liao et al. 2003) and in the field (Hinch and Rand 2000; Standen et al. 2002). However, apart from normal open channel boundary layer issues, the raceway used in this study was relatively free of turbulence, and smallmouth bass videotaped by Peake and Farrell (2004) in the same raceway swam actively (albeit near the bottom) and did not appear to be gaining any hydrodynamic advantage from the flow. Similar advantages can also be associated with vertical and horizontal walls, where boundary layer water moves slower and ground effect increases lift and reduces drag (Webb 1993). However, wall effects were probably not an important determinant of the performance differences observed in this study as (1) the effect becomes less pronounced at high water velocities (Webb 1993), (2) both confined and unconfined individuals swam near the bottom of their respective flumes, and (3) similar fish filmed in the raceway by Peake and Farrell (2004) did not favor the walls over the middle of the channel. It may be that differences in wall spacing between the respirometer and the raceway was a contributing factor, as Webb (1993) demonstrated that the critical speed of fish that swam in a narrow area between two walls was lower than that of individuals that had more space. The author attributed the difference to constraints on tail beat amplitude in the former. It is possible that confined smallmouth bass in the present study were not able to swim as fast as those in the raceway because the walls of the respirometer limited tail beat amplitude. However, the reduction in U_{crit} (about 20%) reported by Webb (1993) was not sufficient to fully explain the differences shown here.

In conclusion, it is clear that culvert water velocity criteria based on critical swimming speed data for respirometer-confined fish are very conservative for smallmouth bass, and there is little to indicate that this is a species-specific phenomenon. While the problem is likely caused by a combination of the behavioral, physiological, and hydraulic issues discussed above, it is clear that new techniques need to be developed to establish appropriate culvert and fishway water velocity criteria.

Acknowledgments

This project was made initially made possible through a grant to S.J.P. from the Manitoba Hydro Research and Development Committee, with help from Roy Bukowsky and Dennis Windsor. I thank Phillip Wang, Marno Klein, Cory Ruhlen, Dennis Smith, and Jeff Long for assistance in designing and constructing the experimental raceway. Initial funding was matched by an NSERC collaborative research and development grant to B. A. McKeown, with additional funding and in-kind contributions coming from Manitoba Conservation, Manitoba Department of Highways (Bridges and Structures), the Deep River Science Academy, and the Town of Pinawa. The following scholarships were provided (to S.J.P.): an NSERC postgraduate scholarship, two Simon Fraser University graduate fellowships, an Abbott/Frettwell scholarship, and an Anne Vallee scholarship. The contributions of research assistants Cathy Sumi, Jaymie MacDonald, Cristy Smith, and Jeff Long are gratefully acknowledged.

References

Beamish, F. W. H. 1978. Swimming capacity. Pages 101–187 *in* W. S. Hoar and D. J. Randall, editors. Fish physiology, volume 7. Academic Press, New York.

Brett, J. R. 1964. The respiratory metabolism and swimming performance of young sockeye salmon. Journal of the Fisheries Research Board of Canada 21: 1183–1226.

Bunt, C. M., C. Katopodis, and R. S. McKinley. 1999. Attraction and passage efficiency of white suckers and smallmouth bass by two Denil fishways. North American Journal of Fisheries Management 19: 793–803.

Cooke, S. J., and C. M. Bunt. 2001. Assessment of internal and external antenna configurations of radio transmitters implanted in smallmouth bass. North

American Journal of Fishe
236–241.

Cooke, S. J., K. G. Ostrand, C
D. H. Wahl, and D. P. Philipp
responses of largemouth bass t
and brief air exposure over a
peratures. Transactions of th
Society 132:1154–1165.

Enders, E. C., D. Boisclair, and
effect of turbulence on the co
juvenile Atlantic salmon (*S.*
Journal of Fisheries and Aqua
1160.

Farlinger, S., and F. W. H. Bea
time and velocity increments
ming speed of largemouth b
moides). Transactions of the
ciety 106:436–439.

Hammer, C. H. 1995. Fatigue an
fish. Comparative Biochemis
112A:1–20.

Hinch, S. G., and P. S. Rand. 2000.
and forward-assisted propuls
behaviours of upriver migrai
Journal of Fisheries and Aquat
2478.

Hintze, J. 2001. NCSS and PA
statistical systems, Kaysville.

Jones, D. R., J. W. Kiceniuk, and
Evaluation of the swimming p
fish species from the Macken
the Fisheries Research Board
1647.

Liao, J. C., D. N. Beal, G. V. Lau
tafyllou. 2003. The Karman
nematics of rainbow trout
street. Journal of Experimenta
1073.

Mallen-Cooper, M. 1992. Swimm
Australian bass, *Macquaria*
dachner), and juvenile barram
(Bloch) in an experimental
Journal of Marine and Freshw
834.

Nelson, J. A., P. S. Gotwalt, S.
Webber. 2002. Beyond U_{cri}
performance tests to the phy
the animal, including a new
parative Biochemistry and P
289–302.

Peake, S. J. 2004. Swimming capa

American Journal of Fisheries Management 21: 236–241.

Cooke, S. J., K. G. Ostrand, C. M. Bunt, J. F. Schreer, D. H. Wahl, and D. P. Philipp. 2003. Cardiovascular responses of largemouth bass to exhaustive exercise and brief air exposure over a range of water temperatures. Transactions of the American Fisheries Society 132:1154–1165.

Enders, E. C., D. Boisclair, and A. G. Roy. 2003. The effect of turbulence on the cost of swimming for juvenile Atlantic salmon (*Salmo salar*). Canadian Journal of Fisheries and Aquatic Sciences 60:1149–1160.

Farlinger, S., and F. W. H. Beamish. 1977. Effects of time and velocity increments on the critical swimming speed of largemouth bass (*Micropterus salmoides*). Transactions of the American Fisheries Society 106:436–439.

Hammer, C. H. 1995. Fatigue and exercise tests with fish. Comparative Biochemistry and Physiology 112A:1–20.

Hinch, S. G., and P. S. Rand. 2000. Optimal swim speeds and forward-assisted propulsion: energy conserving behaviours of upriver migrating salmon. Canadian Journal of Fisheries and Aquatic Sciences 57:2470–2478.

Hintze, J. 2001. NCSS and PASS. Number cruncher statistical systems, Kaysville, Utah.

Jones, D. R., J. W. Kiceniuk, and O. S. Bamford. 1974. Evaluation of the swimming performance of several fish species from the Mackenzie River. Journal of the Fisheries Research Board of Canada 31:1641–1647.

Liao, J. C., D. N. Beal, G. V. Lauder, and M. S. Triantafyllou. 2003. The Karman gait: novel body kinematics of rainbow trout swimming in a vortex street. Journal of Experimental Biology 206:1059–1073.

Mallen-Cooper, M. 1992. Swimming ability of juvenile Australian bass, *Macquaria novemaculeata* (Steindachner), and juvenile barramundi, *Lates calcarifer* (Bloch) in an experimental fishway. Australian Journal of Marine and Freshwater Research 43:823–834.

Nelson, J. A., P. S. Gotwalt, S. P. Reidy, and D. M. Webber. 2002. Beyond U_{crit}: matching swimming performance tests to the physiological ecology of the animal, including a new fish "drag strip." Comparative Biochemistry and Physiology Part A 133: 289–302.

Peake, S. J. 2004. Swimming capacity of juvenile northern pike in relation to impingement on irrigation intake screens. North American Journal of Fisheries Management 24:390–396.

Peake, S. J. 1999. Sodium bicarbonate and clove oil as potential anesthetics for non-salmonid fishes. North American Journal of Fisheries Management 18: 919–924.

Peake, S. J., and A. P. Farrell. 2004. Locomotory behaviour and postexercise physiology in relation to swimming speed, gait transition, and metabolism in free-swimming smallmouth bass *Micropterus dolomieu*. Journal of Experimental Biology 207:1563–1575.

Peake, S. J., R. S. McKinley, and D. A. Scruton. 1997. Swimming performance of various freshwater Newfoundland salmonids relative to habitat selection and fishway design. Journal of Fish Biology 51: 710–723.

Plaut, I., and M. S. Gordon. 1994. Swimming metabolism of wild-type and cloned zebrafish *Brachydanio rerio*. Journal of Experimental Biology 194: 209–223.

Reidy, S. P., J. A. Nelson, Y. Tang, and S. R. Kerr. 1995. Postexercise metabolic rate in Atlantic cod and its dependence upon the method of exhaustion. Journal of Fish Biology 47:377–386.

Schreer, J. F., S. J. Cooke, and R. S. McKinley. 2001. Cardiac response to variable forced exercise at different temperatures: an angling simulation for smallmouth bass. Transactions of the American Fisheries Society 130:783–795.

Standen, E. M., S. G. Hinch, M. C. Healey, and A. P. Farrell. 2002. Energetic costs of migration through the Fraser River Canyon, British Columbia, in adult pink (*Oncorhynchus gorbuscha*) and sockeye (*Oncorhynchus nerka*) salmon as assessed by EMG telemetry.. Canadian Journal of Fisheries and Aquatic Sciences 59:1809–1818.

Swanson, C., P. S. Young, and J. J. Cech. 1998. Swimming performance of delta smelt: maximum performance and behavioral and kinematic limitations on swimming at submaximal velocities. Journal of Experimental Biology 201:333–345.

Tarby, M. J. 1981. Metabolic expenditure of walleye (*Stizostedion vitreum*) as determined by rate of oxygen consumption. Canadian Journal of Zoology 59:882–889.

Webb, P. W. 1993. The effect of solid and porous channel walls on steady swimming of steelhead trout, *Oncorhynchus mykiss*. Journal of Experimental Biology 178:97–108.