STREAM SYSTEMS TECHNOLOGY CENTER

STREAM NOTES

To Aid in Securing Favorable Conditions of Water Flows

Rocky Mountain Research Station **July 1999**

Measuring Bedload with Handheld Samplers in Coarse-Grained Mountain Channels

by Sandra E. Ryan and C.A. Troendle

Measuring bedload transport in coarse-grained channels can be particularly difficult because flows necessary for transporting larger particles are usually deep, turbid, and turbulent, making difficult the direct physical measurement or visual observation of particle motion. Consequently, bedload movement may be measured only indirectly, using various traps, tracers, or samplers. Challenges in measuring bedload are compounded by erratic transport patterns, even under stable conditions. Developing representative sampling procedures in steep mountain channels is particularly problematic due to continually fluctuating flows, the presence of large roughness elements, and uneven topography. Yet, the need to understand channel processes requires undertaking efforts to measure coarse-grain movement, recognizing the limits of our present capability to measure the processes.

This article addresses approaches and practical concerns encountered in making bedload measurements using portable samplers in mountain streams. It is based on the combined experience gained by the authors in measuring steep, cobble- and boulder-bed channels at the Fraser Experimental Forest in Colorado and on the Medicine Bow National Forest in Wyoming. The aim is instructional: to use as a guideline for developing sampling protocols.

Several factors need to be considered in developing procedures for measuring transport rates in coarse-grained channels. Guidelines from the U.S. Geological Survey are available. The method used depends partially on the objectives of the monitoring, but also on timing and magnitude of high flows, personnel availability, and expense involved in collecting and analyzing samples. One must often weigh protocol and potential for increase in unexplained variability against the costs involved in obtaining samples. However, some minimum criteria must be followed to obtain representative and comparable samples. These include the selection of a suitable sampler, following appropriate sampling procedures, and other concerns.

Sampler Characteristics

Sampler Type

As a general comment, selection of sampler type, although an important factor, is probably less crucial than the development of an appropriate sampling method. Other things being equal, one may base the selection of a sampler on the characteristics or ease of use at a particular site.

Generally, the sampler should lie flat on the channel bed and the nozzle opening should be two or more times larger than the grain

STREAM NOTES *is produced quarterly by the Stream Systems Technology Center, Rocky Mountain Research Station, Fort Collins, Colorado.*

The PRIMARY AIM *is to exchange technical ideas and transfer technology among scientists working with wildland stream systems.*

CONTRIBUTIONS *are voluntary and will be accepted at any time. They should be typewritten, single-spaced, and limited to two pages. Graphics and tables are encouraged.*

Ideas and opinions expressed are not necessarily Forest Service policy. Citations, reviews, and use of trade names does not constitute endorsement by the USDA Forest Service.

Phone: (970) 498-1731
FAX: (970) 498-1660
E-Mail:stream/rmrs@ fs.fed.us
Web Site: www.stream.fs.fed.us

IN THIS ISSUE

- **Measuring Bedload in Coarse-Grained Mountain Channels**
- **Using Geomorphic Analysis to Characterize Pre-Dam Flow Regimes**
- **Sedimentary Cumulative Watershed Effects**

size of interest. However, these recommendations may be impossible to meet in very coarse-grained channels where bed and flow conditions are less than optimal. In these systems, standard samplers, with small nozzle openings relative to bed particles, are usually used in conjunction with other methods that sample larger grains, such as painted tracers or instream basket type samplers. Regardless of which sampler is used, it is important to be consistent and use the same type throughout the sampling duration, even with changing transport rates and patterns. This is because we don't know how transport rates measured with different samplers compare, and there is no currently accepted means of adjusting transport rate estimates from different tools to a common base.

The most commonly used hand-held, portable sampler is the Helley-Smith bedload sampler. The original version (Figure 1) was constructed of 1/4-inch thick cast aluminum, with a 3 x 3 inch (inner dimension) intake, and an expansion ratio (exit area/entrance area) of 3.22. A sheet-metal version of the Helley-Smith sampler is commercially available. The US BLH-84 bedload sampler developed by the Federal Interagency Sedimentation Project is newer, and although it has the same opening and wall thickness as the original Helley-Smith, it has a narrower flare and an expansion ratio of 1.40. A BL-84 sampler fits more easily into the channel bottom because the reduced flare is less intrusive among larger grains. The U.S. Geological Survey recommends that a BL-84 be used, but will accept bedload data collected with any of the three samplers.

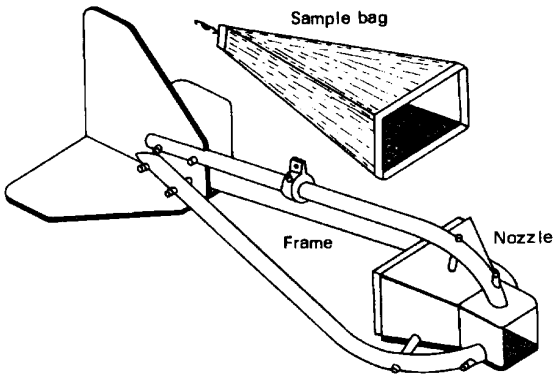

Figure 1. Sketch of the cable version Helley-Smith bedload sampler (from Emmett, 1980)

Another frequently used sampler for coarse-grained channels is a scaled-up version of the Helley-Smith. This sampler has the same ratio and efficiencies as the original, but has an intake opening of 6 x 6 inches. It is usually constructed of 1/4-inch steel plate (cable version), though the wading version may be constructed of 16 gauge stainless steel, making it lighter and easier to handle. The advantage of the larger sampler is that it can sampler larger particles; however, it is more difficult to place on the bed and relatively unstable at high flow.

Sampler Bags

All of the samplers described use a similar type of mesh bag to retain the sample. The characteristics of the bag influence sampling efficiency, so bag selection is not arbitrary. The most commonly used mesh size is 0.25 mm. Bags with smaller mesh restrict flow and clog faster, reducing the trapping efficiency of the sampler. Bags with larger mesh openings clog less quickly, but finer material may be lost through the openings. Regardless of the mesh size selected, it should be the same between samples intended for comparison and be recorded as part of the bedload record.

Sampler Handles

The length and stability of the handle is an important factors influencing an operators ability to place the sampler without disturbing the bed. The handle needs to be long enough to easily reach the channel bottom, whether sampling from a boat, bridge, or while wading. Additionally, there should be a solid connection between the handle and the sampler head so that the sampler doesn't "pivot." Likewise, the handle needs to be sturdy enough and unbending in high flows but not so heavy that it increases the potential to "mine" the bed. In our experience, light-weight, telescoping handles were not sturdy enough for high flows. We replaced such handles with solid pieces of galvanized steel or aluminum tubing (3/4"). We found that handles up to 8 feet in length reached the channel bottom from our 1-2 feet high sampling platforms (small bridges) and provided the necessary strength and stability, and assured operator safety.

Sampling Methods

Bedload movement can be highly variable in coarse-grained systems, both spatially and temporally. Spatially, transport often occurs in zones, the position of which is unpredictable and does not always correspond with the highest velocity or shear stress. Additionally, zones of high transport may shift position with flow level. Temporally, transport has been associated with the movement of bedforms, clusters, sheets, or pulses, which are often independent of variations in discharge.

Quantification of mean transport rates requires procedures that account for the erratic nature of bedload movement. Sufficient samples from different positions in the channel (or *verticals*) are needed for a representative spatial measure. Additionally, the total sampling period must be long enough to measure a suitable temporal average. There are, however, no hard and fast rules as to the procedures that will accomplish this, only some rough guidelines.

Composite Versus Separated Samples

Bedload samples may be either separated by vertical or composited into a single sample. *Separated* samples are emptied after measuring each vertical and are useful for assessing the contribution of bedload from various points within the cross-section. *Composite* samples consist of sediment collected from all verticals combined into one sample. In collecting composite samples, the sampler bag does not need to be emptied after each vertical if there is sufficient room to prevent overfilling (and the sampling time is equal for each vertical). Typically a "bedload sample" is a composite sample collected at a cross-section, unless indicated otherwise. As may be expected, separated samples are more expensive and time consuming to collect and analyze.

Number and Spacing of Verticals

Because bedload is transported unevenly within the channel, it is necessary to sample the entire cross-section over a variety of flows to identify the position and stability of transport zones. The more verticals used, the better the estimate of the mean rate and the more detailed cross-sectional patterns become. There is, however, a trade-off between adding verticals and minimizing the time required to sample a cross-section.

A method proposed by Emmett, which is frequently used in gravel-bed channels, is to sample a minimum of 20 equally-spaced points per traverse, with two traverses made per bedload sample. With this approach, about 40 vertical measurements comprise one sample. For most purposes, the spacing between verticals should be equal; the spacing must be equal if the sample is to be composited. However, this number of verticals is probably excessive in small mountain streams, because channels are typically narrower and the sampler occupies a larger proportion of the streambed, so fewer verticals are needed to achieve a suitable spatial measurement.

Sampling Time

Sampling time is the total time that the sampler is held on the stream bed at each vertical. Longer sampling times provide better measurements of mean transport at that point, however, the longer the sampling time, the longer it takes to sample a cross-section. If too much time is given to each vertical, flow conditions for the duration of sampling may fluctuate excessively.

The U.S. Geological Survey recommends a sampling time of 30 to 60 seconds for each vertical in gravel-bed streams. We incorporated a longer sampling time (1-2 minutes) because of the highly sporadic nature of bedload transport in our cobble- and boulder-bed channels.

Ideally, a bedload sample of the cross-section is collected in 1/2 to 1 hour, during moderately fluctuating flow conditions; while feasible in small mountain streams, this may be impossible where there are many verticals and they are bagged separately.

Sampling Frequency

Sampling frequency determines the total number of samples collected for a site; sufficient numbers should be collected in order to develop valid transport relationships. From our experience, a minimum of 25 composite samples, measured over a wide range of flows (i.e., low flow to roughly bankfull), were needed to define a transport function. Because the variability of transport is greater at higher flows, increased sampling under those conditions is advantageous. The number of samples and range of sizes is constrained by the length of runoff and level of peak flow reached, which is snowmelt driven in our situation. For example, if a site is measured 5 times a week for 6 weeks using snowmelt runoff, then 30 bedload samples are collected, meeting the minimum needed for developing a suitable bedload function for a wide range of flows.

Other Concerns - *Bridges Versus Wading*

We strongly recommend the collection of bedload samples from bridges or platforms that span the entire channel, not only to ensure operator safety at high flows, but also to maintain the integrity of the channel (i.e., no rocks are kicked up by persons wading nearby). If samples must be collected by wading, a guide cable should be strung across the channel for the operator to grasp while crossing during high flow. In this case, every effort should be made to maintain the character of the stream bed, and all movement should be downstream of the cross-section.

Strengths and Weaknesses of Portable Samplers

Portable samplers are easily transported to remote areas and may be used at a number of sites. The sampling scheme can be designed to meet many objectives, whether the interest is mean transport rates or variation in transport patterns within a cross-section. A transport database may be developed within a year or two, depending on flow levels reached during the sampling period. Their main weakness is that the confidence in the estimate of mean transport is lowered for many reasons, many of which we described above. Also, there is a limit to the size of material that may be sampled with a relatively small nozzle, so estimates of flow competence are suspect. Data from Coon Creek, however, showed that 85% or more (by weight) of the grain sizes excavated from weir ponds would fit into a sampler with a 3 x 3 inch opening, indicating that these samplers are capable of trapping a majority of the grain sizes moved as bedload. Finally, sampling procedures using portable samplers are highly labor intensive and, as such, can be quite expensive.

While a single method and established guidelines for quantifying the full complexity of bedload transport processes in coarse-grained channels would be best, we are simply not at this level of assessment for steepland environments. Because of the difficulties encountered in obtaining incontestable data from standard measurement procedures, several methods (such as, painter tracers or instream baskets) may be necessary to obtain a complete picture of bedload transport process in coarse-grained channels.

Reference Cited

Emmett, William W., 1980. A field calibration of the sediment-trapping characteristics of the Helley-Smith bedload sampler. U.S. Geological Survey, Prof. Paper 1139, Washington, DC.

Sandra Ryan is a Research Hydrologist and Geomorphologist, Rocky Mountain Research Station, Laramie, WY; (307) 745-2005; sryan/rmrs_laramie@fs.fed.us
Chuck Troendle is a Research Hydrologist, Rocky Mountain Research Station, Fort Collins, CO; (970) 498-1250; ctroendle/rmrs@fs.fed.us

The complete publication by Ryan and Troendle from which this summary was abstracted is: S.E. Ryan and C.A. Troendle, 1997. Measuring bedload in coarse-grained channels: procedures, problems, and recommendations. *In:* Water Resources Education, Training, and Practice: Opportunities for the Next Century, American Water Resources Association Conference, June 29-July 3, 1997, Keystone, CO, p. 949-958.

Copies may be requested via e-mail from stream/rmrs@fs.fed.us

Using Historical Geomorphic Analysis to Characterize Pre-dam Flow Regimes in Ecologically Meaningful Terms

by Matt Smeltzer and Neil Lassettre

Ecologists increasingly recognize that reestablishing and maintaining near natural flow regimes is critical for restoring and managing healthy river ecosystems below dams (Poff et al. 1997, Power et al. 1996). Variability in the pre-dam flow regime drive sediment transport, productivity, and disturbance regimes that fundamentally influenced food web interactions, riparian vegetation form, and other ecological attributes of the pre-dam river ecosystem.

The Nature Conservancy's Biohydrology Program developed the Indicators of Hydrologic Alteration (AIH) software that uses pre-dam and post-dam daily flow records to calculate pre-dam hydrologic variability and dam-induced changes in 33 hydrologic parameters (Richter et al. 1996, 1997; ***Stream Notes,*** Jan. 1999 issue) and assigned likely ecosystem influences to changes in five general groups of hydrologic parameters.

Resource managers responsible for restoring and managing river ecosystems below dams often need more specific knowledge than hydrologic variability analysis provides. Historical geomorphic analysis can be used in addition to hydrologic variability analysis to show how flow variability interacts with site-specific channel and floodplain geomorphology to cause variability in flow depth. This allows managers to better understand how pre-dam flow variability drove specific ecological processes that supported key attributes of the pre-dam ecosystem. For example, variability in the magnitude, frequency, and duration of pre-dam flood flow depth influences where riparian trees establish and survive.

Site Description

The Upper Owens River drains a glaciated 1020 km^2 basin on the eastern flank of the Sierra Nevada range, flowing eastward near Mammoth Lakes, California, into Long Valley Caldera, a natural Pleistocene lake developed as a reservoir by the City of Los Angeles in 1941. The City of Los Angeles constructed Long Valley Dam at the head of the Owens River Gorge as part of a hydropower project in 1941, and completely dewatered the 16-km Lower Gorge reach from 1953 to 1991. Beginning in 1991, a limited range of flows has been released to rewater the reach, recreate riparian habitat, and reestablish a high quality brown trout sport fishery while maintaining hydropower diversions.

Snowmelt dominated the pre-dam hydrology of the Gorge. Floodplain wetland storage in Pleistocene lakebed deposits on the low-gradient Long Valley floor attenuated peak flows that entered the Gorge, and delayed return flow which maintained winter baseflow levels in the Gorge of about 80% of mean annual flow (Smeltzer and Kondolf 1999). The pre-dam 100-year flood discharge (41 m^3s^{-1}) was about 2.4 times that of the mean annual flood, and the pre-dam mean annual flood was about three times the mean annual flow (17 m^3s^{-1} and 6 m^3s^{-1}, respectively).

Methods

As part of a larger study (Smeltzer and Kondolf 1999), we obtained pre-dam ground photography of the Owens River Gorge canyon bottom (ca. 1912-1915) and identified cross-sections of the canyon bottom for detailed study. At Site 1, we surveyed a cross-section that historical photos showed to be a pool-run habitat complex and a floodplain entirely spanned by an even-aged stand of juvenile willow (*Salix* spp.) (Figure 1). At Site 2, we surveyed a cross-section that historical photos showed to be a pool-run habitat complex and a steep talus slope supporting a mature riparian gallery forest dominated by cottonwood (*Populus* spp.) (Figure 2). We surveyed existing features of the channel and floodplain profile and rooting elevations of snags of individual riparian trees evident in historical photos. We also surveyed the current profile of fine silt and organic detritus covering the pre-dam channel bed (Figures 1 and 2), but used the pre-dam channel bed profile for pre-dam flow depth calculations.

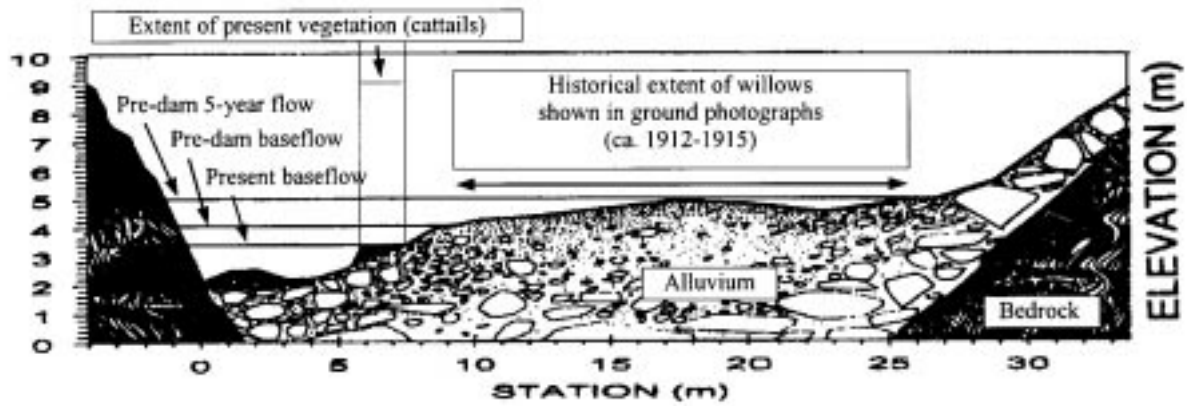

Figure 1. Cross-section surveyed May 1998 at Site 1 in the Owens River Gorge. The pre-dam 5-year return flow depth, pre-dam mean winter baseflow depth, and current managed steady baseflow depth are shown (in order of decreasing elevation).

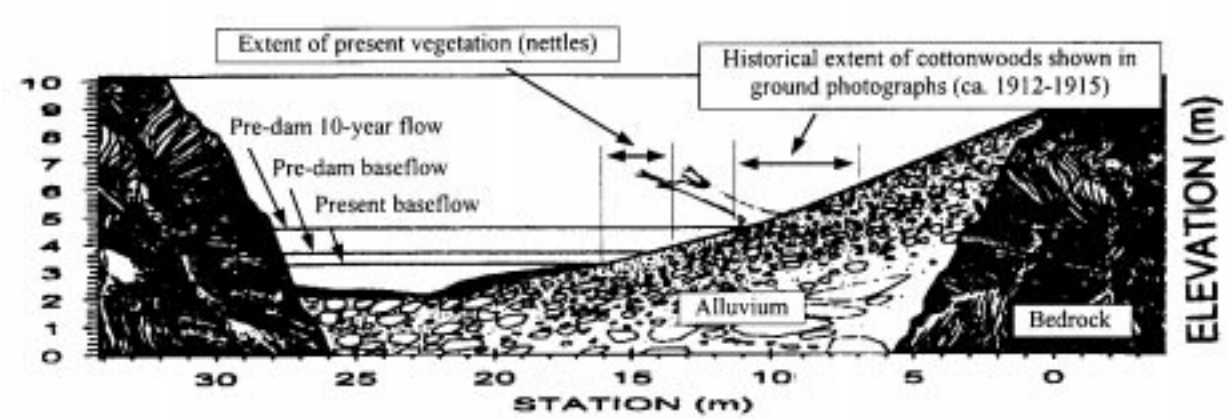

Figure 2. Cross-section surveyed May 1998 at Site 2 in the Owens River Gorge. The pre-dam 10-year return flow depth, pre-dam mean baseflow depth, and current steady baseflow depth are shown (in order of decreasing elevation).

To quantify hydrologic variation during the pre-dam flow regime, we obtained USGS daily flow records from the pre-dam period (1910-1923, 1928-1940) for a stream gage 8 km below the study sites. Using IHA (Indicators of Hydrologic Alteration) software (Richter et al. 1996), we calculated the frequency and magnitude of annual maximum 90-, 30-, and 7-day duration flows during the pre-dam period, and examined magnitude and duration of individual floods occurring during the 1910-1915 time period. This allowed us to assess the influence sustained flooding had on riparian conditions evident in historical photos of Site 1. We examined 5-year and 10-year annual maximum return flows for the entire pre-dam period to assess the influence of the pre-dam flood regime on historical riparian conditions at Site 2.

We simulated flow depth at Sites 1 and 2 for selected pre-dam flow parameters using the Manning's equation, verifying in present photographs that there had not been changes in channel form, floodplain profile, or talus encroachment since pre-dam photographs were made.

Results

Historical geomorphic analysis indicates that the floodplain at Site 1 was inundated at discharges exceeding the pre-dam 5-year return flow, which was surpassed for 7 consecutive days every 6 years, and for 30 consecutive days every 10 years (Figure 1). A photograph taken between 1912 and 1915

shows that the entire width of the floodplain was dominated by an even-aged stand of young willow, as were floodplains in adjacent upstream and downstream reaches. Daily flow data from 1910-1915 confirm inundation of the floodplain at Site 1 for 50 consecutive days in 1911, and for a 100 days in 1914.

Historical geomorphic analysis indicates that large riparian trees at Site 2 were rooted just above the 10-year return flow (Figure 2), which was surpassed for 7 consecutive days about every 25 years, but not surpassed for 30 consecutive days during the pre-dam flow regime (Figure 2). Historical ground photographs taken between 1912 and 1915 show a mature riparian gallery forest situated between elevation 4.5 and 5.5 on the steep talus slope at Site 2 (Figure 2). Large riparian trees established and survived at few other locations in upstream and downstream reaches.

Discussion

Relatively frequent, sustained floodplain inundation in the Owens River Gorge during the pre-dam period evidently maintained wide stands of young willow on entire floodplain surfaces. Large riparian trees were able to establish and survive at few locations. Scarcity of sites above the depth of frequent, sustained flooding, and below maximum flood stage (100-year flood depth was generally only 0.5 – 1.0 m greater than 10-year flood depth) limited development of mature riparian gallery forests on the canyon bottom. Flood attenuation and delayed return flow caused by natural floodplain storage (in Pleistocene lakebed deposits) in the upper basin partly explains steadiness of the pre-dam flood and winter baseflow regime.

Conclusions

Hydrologic variability analysis combined with routine historical geomorphic analysis is an effective way to characterize pre-dam hydrologic regimes in ecologically meaningful terms. In the Owens River Gorge, the pre-dam flow regime supported a riparian vegetation form adapted to a higher frequency and duration of sustained floodplain inundation than exists today. Obtaining pre-dam ground photographs of the canyon bottom allowed us to characterize the influence pre-dam flow variability had on riparian conditions and to illustrate changes in riparian conditions resulting from hydropower development.

References Cited

Poff, N.L., J.D. Allan, M.B. Bain, J.R. Karr, K.L. Prestegaard, B.D. Richter, R.E. Sparks, and J.C. Stromberg, 1997. The natural flow regime. BioScience 47(11):769-784.

Power, M.E., W.E. Dietrich, and J.C. Finlay, 1996. Dams and downstream aquatic biodiversity: potential food web consequences of hydrologic and geomorphic change. Environmental Management 20:887-895.

Richter, B.D., J.V. Baumgartner, J. Powell, and D.P. Braun, 1996. A method for assessing hydrologic alteration within ecosystems. Conservation Biology 10:1163-1174.

Richter, B.D., J.V. Baumgartner, R. Wigington, and D.P. Braun, 1997. How much water does a river need? Freshwater Biology 37:231-249.

Smeltzer, M.W. and G.M. Kondolf, 1999. Historical geomorphic and hydrologic analysis of the Owens River Gorge. Report No. CEDR-01-99. Berkeley, CA: Center for Environmental Design Research, University of California, Berkeley. Available by request from Center for Environmental Design Research, 390 Wurster Hall, Berkeley CA 94720.

Matt Smeltzer is a Research Specialist at the Center for Environmental Design Research in Berkeley CA, an Assistant Civil Engineer at Stetson Engineers, Inc., in San Rafael, CA, and a Research Fellow at the White Mountain Research Station in Bishop, CA. (smeltzer@uclink4.berkeley.edu)

Neil Lassettre is a PhD candidate at the Department of Landscape Architecture and Environmental Planning at the University of California, Berkeley, CA. (nlass@uclink4.berkeley.edu)

STREAM NOTES

STREAM SYSTEMS TECHNOLOGY CENTER
USDA Forest Service
Rocky Mountain Research Station
240 West Prospect Road
Fort Collins, CO 80526-2098

July 1999

BULK RATE
POSTAGE & FEES PAID
USDA-FS
Permit No. G-40

OFFICIAL BUSINESS
Penalty for Private Use $300

IN THIS ISSUE

- **Measuring Bedload in Coarse-Grained Mountain Channels**
- **Using Geomorphic Analysis to Characterize Pre-Dam Flow Regimes**
- **Sedimentary Cumulative Watershed Effects**

STREAM NOTES

ncasi
NATIONAL COUNCIL FOR AIR AND STREAM IMPROVEMENT

Scale Considerations and the Detectability of Sedimentary Cumulative Watershed Effects

by Kristin Bunte and Lee MacDonald

NCASI Technical Bulletin No. 776

January 1999

This report is a comprehensive study of the effects of temporal and spatial scale on cumulative sediment effects. The principal focus is on the extent to which potential increases in sediment load from forest management activities can be transported downstream, our ability to detect these changes, and the extent to which these cumulative effects are scale dependent. The report is a valuable compendium of what we know about sediment, how variable it is, how it moves through the stream system, and would make an excellent addition to anyone's technical library about sediment.

Copies of the 327 page report are available at no cost to government employees and university faculty from NCASI. Contact NCASI, Publications Coordinator, (919) 558-1999, (publications@ncasi.org).

The United States Department of Agriculture (USDA) prohibits discrimination in its programs on the basis of race, color, national origin, sex, religion, age, disability, political beliefs, and marital or familial status. (Not all prohibited bases apply to all programs.) Persons with disabilities who require alternative means for communication of program information (braille, large print, audiotape etc.) should contact USDA's Target Center at 202-720-2600 (voice or TDD).

To file a complaint, write the Secretary of Agriculture, U.S. Department of Agriculture, Washington, DC 20250, or call 1-800-245-6340 (voice) or 202-720-1127 (TDD). USDA is an equal employment opportunity employer.