INTRODUCTION

Land managers have a continuing need to measure streamflow and sediment, both in unaltered settings and for monitoring response to management activities. Collecting discharge and sediment data at high flows may be neglected in some situations. This may be due to safety considerations associated with wading, or due to a lack of bridges or other available structure crossing the stream. A hand-operated cableway with traveling block system has been used by the Nez Perce National Forest since 1977. These installations allow hydrographers to safely collect streamflow and sediment data during high flow conditions. Operated from the bank, this cableway system provides a safe, low-cost, and effective method to acquire year-round measurements.

As river stage rises, safety of the hydrographer who collects data becomes an increasing concern. The common rule-of-thumb is to avoid wading in streams when the product of the depth (in feet) and the water velocity (in feet per second) exceeds 10. The use of temporary bridges and platforms can reduce the risk of an accident occurring during in-stream measurements, but at the same time it may provide forest visitors with a hazardous setting. The system described in this paper helps avoid both of these situations.

The system in use on the Nez Perce National Forest consists of a looped cable stretched across a stream channel and suspended from two support posts that are permanently installed on opposite stream banks. The cable travels around a crank-operated drive on one bank and a pulley on the other end. This allows measurement equipment to be moved out over the desired location in the stream on a traveling block (Figure 1). This traveling block system has similar operating principles to the running skyline used in logging operations. Stream measurements are taken with much of the same equipment and methods that might be used with a bridge crane. Similar to data collected from other suspension systems, a degree of accuracy is lost in comparison to wading data.

Figure 1: Cableway ready for discharge measurement. Current meter and weight are suspended from the traveling block on the sounding reel cable. (N. Gerhardt)

The system is generally applicable to streams less than 100 feet wide. This limitation is controlled by the cable length of the sounding reel used. Present installations on the Nez Perce National Forest are on 50–60 feet wide streams. Recent peak measurements recorded on these streams were a discharge of about 990 cfs (Rapid River, 5/16/96) and a velocity of 9.2 fps (Little Slate Creek, 5/16/97).

While hand-operated cableway equipment described in this publication was not developed by the Nez Perce National Forest, its documentation is obscure. The U.S. Bureau of Reclamation's *Water Measurement Manual* (1967) contains a one paragraph description and photo of a similar cableway in operation, but little more. The British Department of the Environment, Water Data Unit (1978), has published a review of three portable winches designed for use with portable or permanent cableways. Described as portable, these winches weigh 80 to 160 pounds.

Mechanical drawings of cableway systems from the Lolo National Forest (1979) and the Montana Department of Natural Resources and Conservation (1976) are reproduced here, with slight modifications.

Similar bank-operated cableway systems are in use across the country. A short summary of four of these systems is included for completeness. Each has advantages and disadvantages in ease of installation, ease of use, portability, and cost. The evaluation of these other systems is by no means comprehensive, as the author has no first-hand experience with their operation.

EQUIPMENT NEEDED

The cableway is constructed of parts manufactured at a machine shop, with additional parts from a hardware store. Installation requires readily available construction supplies including concrete, cable, cable clamps, and turnbuckles.

The cableway parts requiring fabrication are described in detail in construction plans contained in Appendix B. The posts and pulleys are steel and a majority of the remaining parts are made of aluminum to resist rust.

Measurements are taken with standard stream gaging or sediment sampling equipment. Operation requires a sounding reel to raise and lower the equipment. Cable-suspended equipment could include a current meter with sounding weight, bedload sampler, or suspended sediment sampler, depending on the data desired. A list of suppliers and estimated costs is contained in Appendix A.

DESIGN

The cableway consists of six parts (Figure 2). An upright steel post is installed on each bank. On the shore with easy access, a pulley-drive housing is mounted atop the post. On the far shore the post supports a pulley, the tailhold. Operated with a hand crank, the pulley-drive controls the movement of a looped cable that is stretched between the posts. A traveling block rides on the upper cable loop and is attached to the lower cable loop. Suspended from this traveling block, the hydrographers' equipment may be positioned and operated anywhere in the cross section.

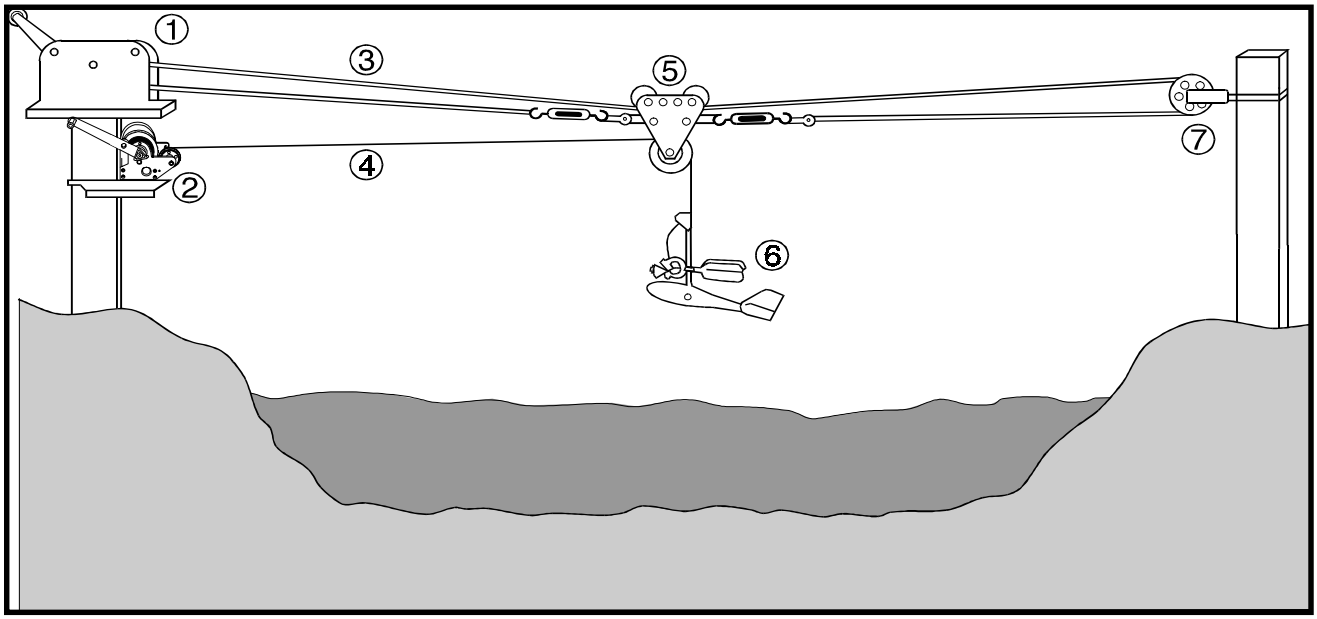

Figure 2: Schematic of the cableway system with sounding reel and current meter in use. (1) near post with pulley drive housing, (2) sounding reel, (3) cableway cable, (4) sounding reel cable, (5) traveling block, (6) current meter, and (7) tailhold on far post. (J. VanDeWater)

A standard sounding reel, such as an A-55 or B-56, is also attached to fittings on the near post (Figure 3). The cable from the sounding reel is used to suspend the measuring equipment, such as a current meter. The cable is supported by the lower pulley of the traveling block. Using the sounding reel, the equipment may be raised and lowered as needed for data collection. Thus, the horizontal position of the current meter is controlled by the cableway crank, while the vertical movement is controlled by the sounding reel.

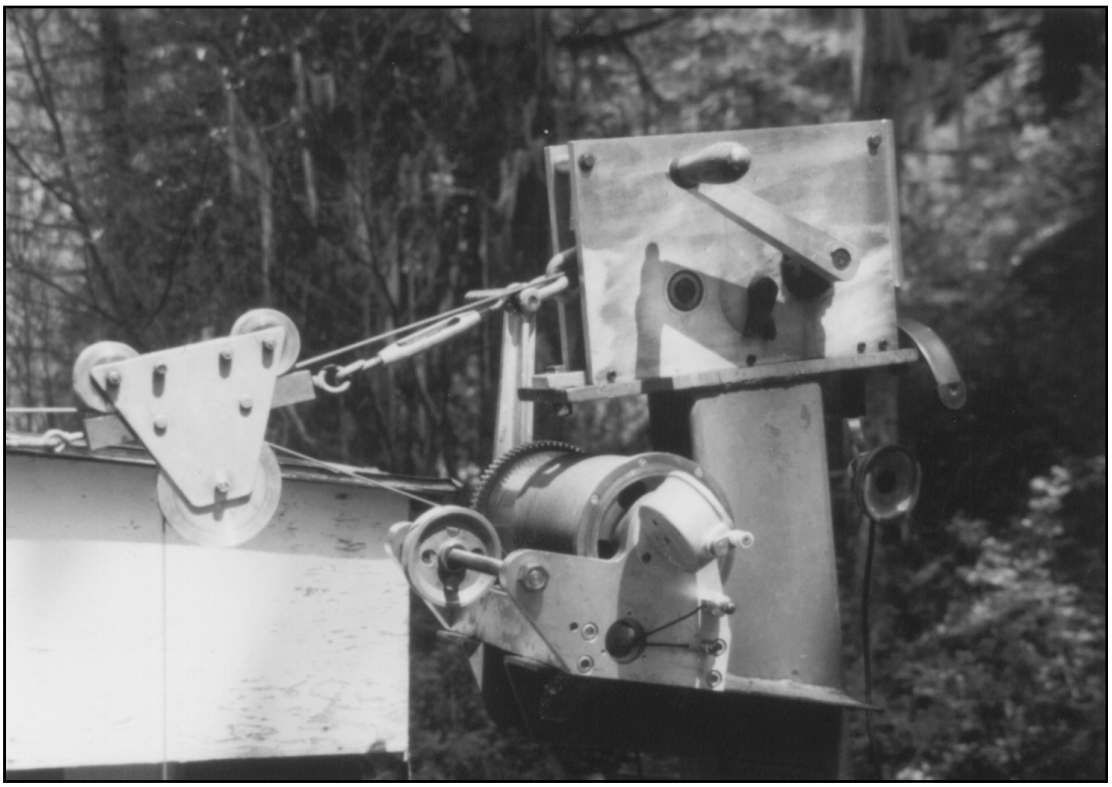

Figure 3: Key components of the cableway. Traveling block, sounding reel, and crank-pulley mechanism. (N. Gerhardt)

Other Designs in Use

A lighter version cableway made with a boat winch is in use on the Clearwater and Idaho Panhandle National Forests in North Idaho. This installation is very inexpensive. A boat winch may be purchased for as little as $40.00 to replace the crank-pulley drive housing. The system is often attached to trees, rock or other available structures, reducing setup time. (Brooks Beegle, Clearwater National Forest, Orofino, ID)

A completely portable system has been used by the U.S. Forest Service Pacific Southwest Experiment Station. Instead of permanent posts, tripods with guylines support the equipment. In this way the entire cableway can be moved to temporary, remote locations. It is set up prior to high flows and then left in place for the season. (Tom Lisle, Redwood Sciences Laboratory, Arcata, CA)

A simple variation of our cableway is built to a U.S. Geological Survey (USGS) design, and marketed by a hydrological equipment supplier. The "USGS Bank-Operated Cableway" uses a static line to suspend the equipment from the traveling block. A hand-operated tow cable is strung beneath the static line on two pulleys and is used to position the traveling block and equipment. A sounding reel controls the vertical motion of the equipment, similar to our design. One advantage of this design is the ease of using guy-lines on the posts, providing a more stable system. A 100-foot span version of this system generally sells for less than $2,500, not including the sounding reel or measurement equipment. (Rickly Hydrological Company, Columbus, OH.)

The U.S. Geological Survey in Washington has designed a cableway that works closely with the B-56 sounding reel. Instead of being separate, the cableway control unit attaches directly to the sounding reel without modification. It provides vertical or horizontal control with the one reel handle. During horizontal positioning, the sounding cable is simultaneously controlled, making this job easier and faster. The installation is estimated to cost about $2,000. Still in the design phase, this equipment is presently being manufactured for U.S. Geological Survey use, but presently it is unavailable for other agencies and private organizations. (John Bowldy, U.S. Geological Survey, Tachoma Field Office, WA.)

For larger installations, double drum winches are available. The cableway towers and main cable are a heavy-duty version of the design described in this paper and cost about $10,000. Double drum winches start at $7,500, replacing the need for a B-reel. One manufacturer is Ott Messtechnik, Germany. These systems are available through Rickly and through Scientific Instruments of Milwaukee.

CABLEWAY SITE SELECTION

Site selection depends both on the qualities needed for a good discharge or sediment measurement and on factors affecting the installation and operation of the cableway. Buchanan and Somers (1969) discuss selection of discharge measurement sites. Other measurements to be taken may have additional requirements, such as the channel substrates and their effect on bedload measurements. A discussion of site factors that can affect the operation and strength of the cableway follows.

Substrates may affect the stability of the posts and resulting cableway strength. Rock or boulder sites will provide a more secure foundation for the posts than sands or gravel. Post stability can be increased with additional concrete, anchors, and bracing. Posts may be modified and bolted directly to solid rock.

A person experienced with the channel and its historic stages can provide valuable knowledge and insight. Consider the 100-year floodplain to protect the posts from possible flood damage. The approach to the site may become more difficult at high-water, but access is only needed to one side to operate the cableway. The posts will need to be positioned so the cable is perpendicular to the water flow.

The distance between the posts may affect the operation of the cableway. Span width is limited by the length of cable on the type of sounding reel used and by the sag of a weighted cable. The A-55 sounding reel comes equipped with 75 feet of cable, while the B-56 reel may be equipped with either 115 or 144 feet of cable. As the span approaches the length of the sounding cable, the distance the posts are set back from the high water mark and the height above the high water mark may become important factors in determining post placement.

The optimal post position results in the cable being at a height of six feet above the water level during the use period, which is commonly high flows. The water level at bankfull is a good starting point, with consideration given to how much higher peak flows might be. A terrace, or abandoned floodplain, may provide a good site. Generally, the higher the cable is above the water, the less the effort that will be needed to horizontally position the equipment at the desired location. Posts set just above high water will work; they just require more effort and coordination during operation. A weighted cable commonly sags one or two feet and even more for long spans. In borderline conditions, computation of cable sag by a structural engineer may be beneficial.

The position of the cable relative to water levels is especially important to consider in rivers used for recreational boating. Cables need to be high enough to avoid creating dangerous situations for recreational users. Appropriate considerations are a function of the type and amount of use and may include measures such as signing or posting outlooks during measurement periods.

A work area with good footing will ease operation and improve safety at the site. The cableway is operated from behind and to the sides of the head block post. A level space between the head block post and the stream is desirable so measurement equipment may most easily be transported and attached to the cableway. Avoid placing the cable where you will have to duck under it to access the river's edge, either when using the cableway or during other times of the year. A trail may be needed to move equipment from your vehicle to the cableway.

INSTALLATION OF POSTS AND CABLEWAY

Installation should occur when the river can be waded. On-site installation time for one person is approximately four hours to set posts and two hours to install the pulley mechanisms, cable and carriage. The use of concrete will require a drying period between each of these steps. For those less experienced in construction projects, installation time may double.

The posts must be firmly anchored. They need to be set plumb, at a convenient work height, and so the pulleys are level and aligned with each other. Forces applied to the posts can quickly reach high levels. Rocky substrates provide the most secure foundation. Most commonly, the post is set in a hole and filled with concrete for a secure footing. More concrete is needed for sites with little rock. As little as two bags of concrete might be used, but a poor site might require a cubic yard or more. A tie-back with anchor(s) may be used to support the tailhold but should be avoided at the pulley housing end, where it may interfere with operations.

Post Installation:

- The top of the head block post should be installed at a height of about four feet, allowing the cranks to be operated easily by both tall and short persons. Set the tail post so its top is about nine inches above the top of the head block post. Align the posts so the pulleys will be directed towards each other, minimizing binding of the cable. Brace the posts until the concrete has dried.

- Measure the distance between the posts for the cable.

- Allow concrete to cure seven days or more, depending upon the type of concrete used.

Installation of the pulley mechanisms, cable and carriage:

- Bolt the main pulley housing atop the near post and the tail pulley on the far post.

- Attach a turnbuckle to each end of the center tie bar of the traveling block. Clamp the cable to one of the turnbuckles using a thimble and two clamps.

- Feed the free end of the cable around the drive pulley and between the two idler pulleys of the main housing. The cable coming off the top of the drive pulley is fed through the traveling block, stretched across the stream, and over the top of the tail hold pulley (Figure 4).

- Attach the other cable end. With the turnbuckles opened wide, feed the free cable end through the near turnbuckle, stretch the cable as much as possible, and clamp it in place with the remaining two clamps and thimble.

- Adjust the cableway housing using the slotted hole in the post plate, aligning the housing parallel to the stretched cable and tail pulley.

- Adjust the final tension of the cable with the two turnbuckles to reduce sag. Wagner (1995) recommends an unloaded sag of 2 percent of the line length for cableways with manned cable cars. Cut off the excess cable.

- Readjust the tension of the new cable after several uses if necessary, using the turnbuckles.

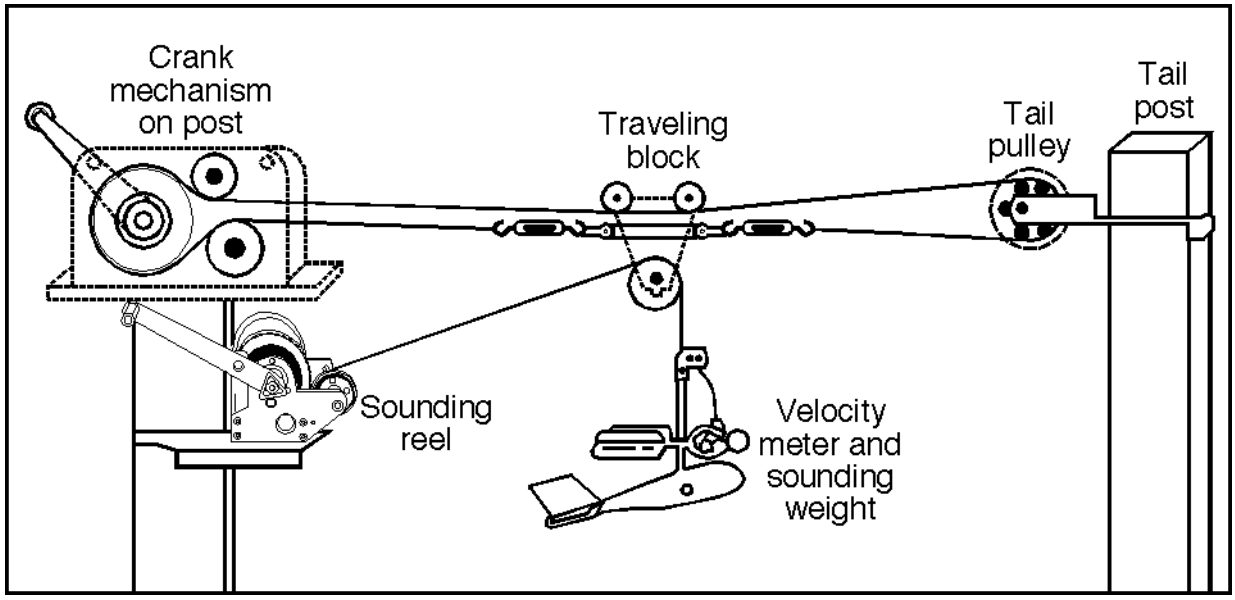

Figure 4: Schematic of the cable routing. The traveling block rides on the upper span of the main cable. The ends of the main cable are attached to the traveling block, controlling its movement. Equipment is suspended from the traveling block with the sounding reel cable. (J. VanDeWater)

CABLEWAY CALIBRATION

Use of the line counter fitting described in the construction plans is not recommended. A means to identify the horizontal location of the traveling block is needed, but previous use of the line counter on the counter pulley shaft (Appendix B, sheet 5, part 16) proved unreliable. Slipping of the cable resulted in inaccurate readings, and year-round exposure to the weather caused the counter to fail.

Instead, the location of instruments in the cross section is gauged by pre-marking the cable with paint. The cable is most effectively marked during the wadable period using a measuring tape stretched under the cable while a sounding reel is in place and a sounding weight is attached. With the sounding weight aligned with the desired location on the tape, the upper cable is marked with enamel paint where the cable enters the pulley housing (Figure 5a & 5b).

On cross sections that are normally measured at low flows directly under the cable, the author prefers to have the measuring tape attached to the same bank pins customarily used during wading measurements. This allows cross sections to be compared more easily.

Two-foot markings are appropriate for streams about 50 feet wide. Ten-foot intervals are marked in one color, and two-foot intervals in a second color. During operation, distances are estimated between the marks.

Paint pens, similar to marking pens, are neat and efficient. Spray paint is also effective when used with a cardboard stencil. Paint marks may need to be refreshed annually.

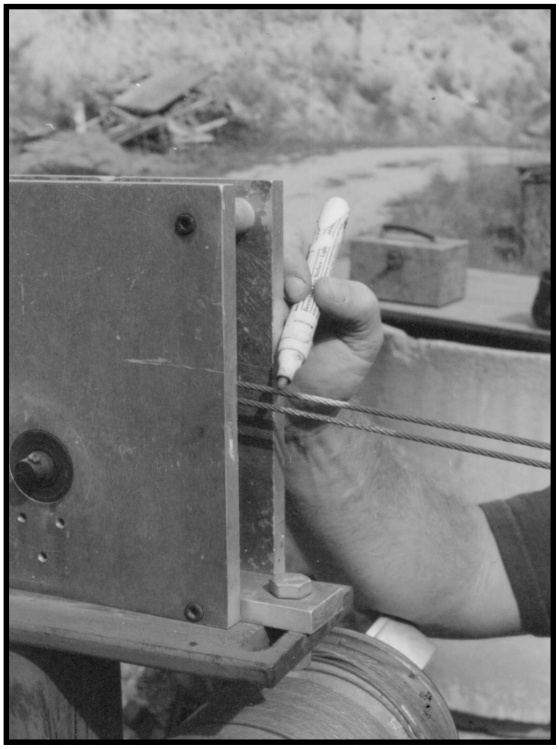

Figure 5a & 5b: Marking cable for horizontal location. Paint marks on the cable allow the equipment to be positioned accurately in the cross section. a) Hydrographer positions the traveling block at desired location prior to marking cable. b) Marking the cable with a paint pen. (J. Paradiso)

CABLEWAY OPERATION

Discharge measurements and sediment sample collections are taken using standard equipment and techniques (Buchanan and Somers, 1969). The operation protocols used on the Nez Perce National Forest are included in Appendix C.

The sounding reel is attached to the mount on the head block post (Figure 6). It is installed and removed on each visit to allow use at other sites and avoid theft or vandalism. The reel cable is attached to the traveling block by removing the lower sheave, feeding the sounding cable through, and replacing it (Figure 7). For discharge measurements, the current meter and sounding weight are used, attaching them to the end of the sounding cable. The current meter and sounding weight can be replaced with an integrated depth sampler or bedload sampler, for suspended sediment or bedload measurements.

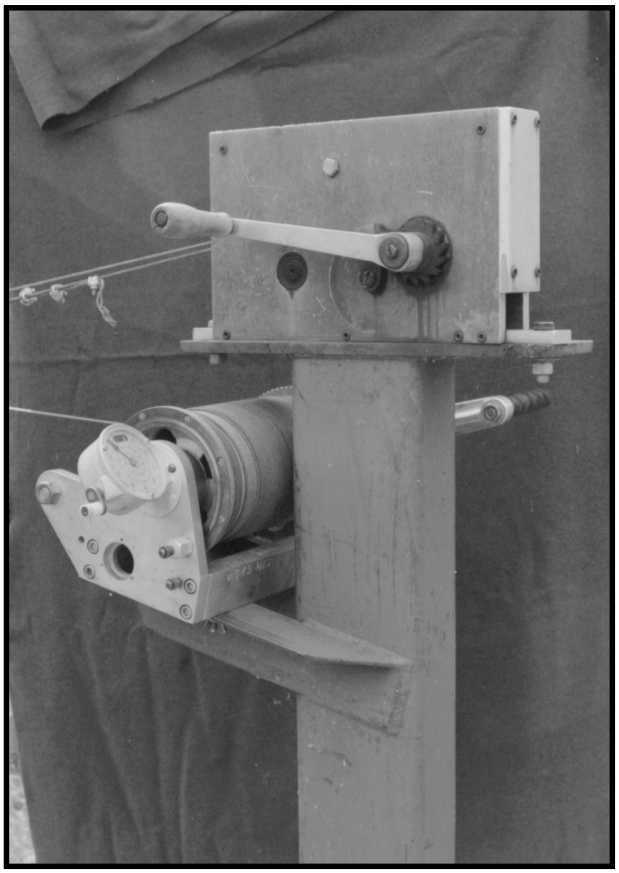

Figure 6: Head block post. Pulley housing remains on site between visits, but the sounding reel is removed. (J. Paradiso)

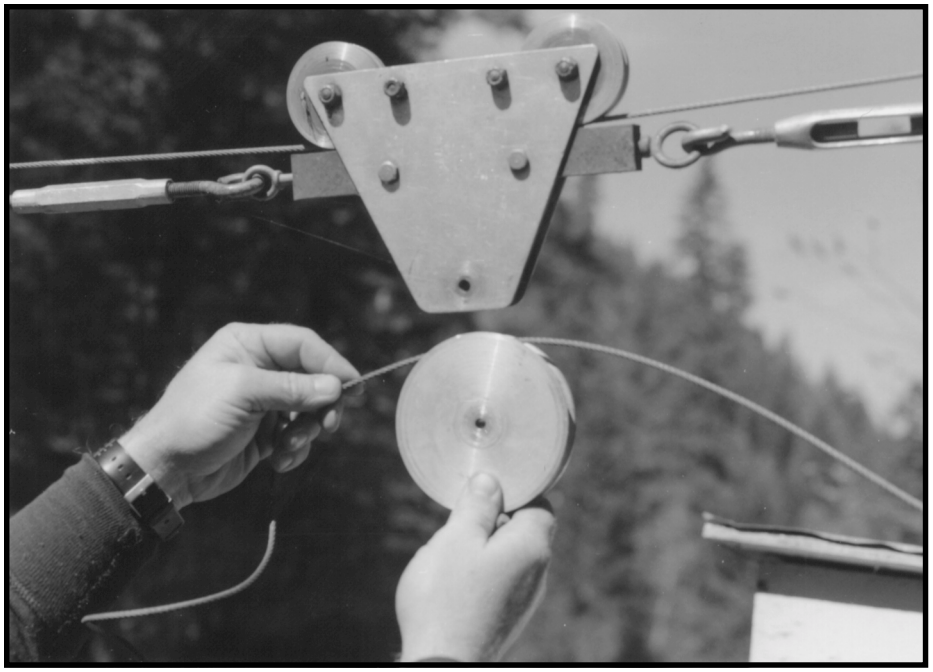

Figure 7: Attaching the sounding cable to traveling block. The sheave is removed and replaced to attach the cable prior to use. (B. Beegle)

The equipment is positioned at the partial section to be measured, using the markings on the cable. This requires operating both the cableway and reel handles, feeding line out with the sounding reel as the block is moved out with the cableway crank (Figure 8). Coordination is required to move the equipment into position, turning the two cranks simultaneously. When using 50 pound or heavier sounding weights, setting and retrieving sampling equipment from wide streams may be slow and tiring. The operation is best shared by two persons working in unison, each on one of the control handles.

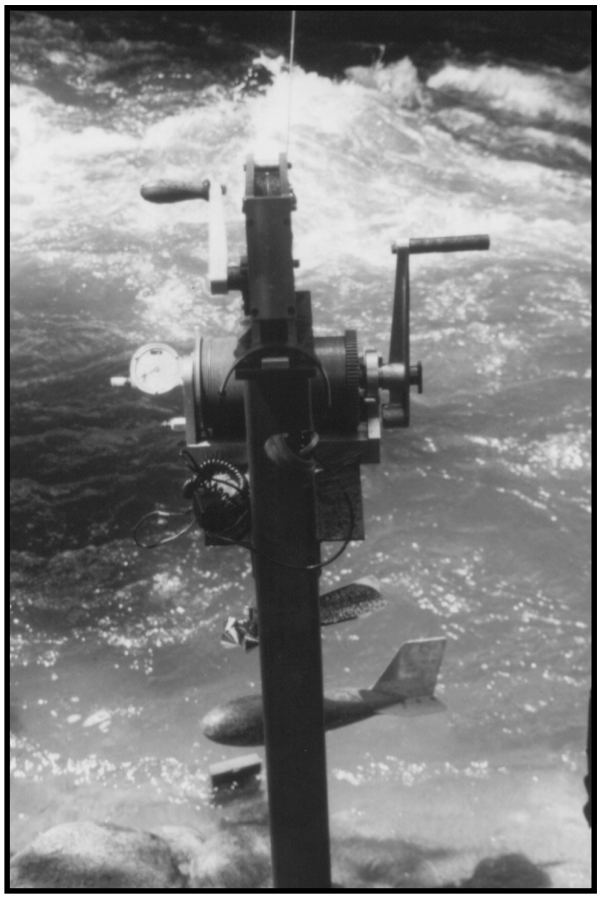

Figure 8: Hydrographer's view. Operation of the two handles needs to be coordinated to move the equipment. (N. Gerhardt)

Safety precautions need to be taken when operating the cableway. High flows and moving debris can apply large stresses to the components of the system. The ratchet pawl locking the horizontal location of the traveling pulley must operate freely. If it sticks in the up position while moving the main cable, the handle may spin wildly, with force, when released.

The vertical placement, or depth, of the current meter is set with the depth indicator of the sounding reel. The depth indicator is set to zero as the bottom of the weight (or the current meter cups) touches the water surface. It is read again when it touches the stream bottom. The meter is then raised to the appropriate depth, accounting for the distance separating the meter and the weight.

The horizontal angle of the current meter is hard to assess and must be estimated from the shore.

During peak flows, high water velocities and floating debris can further complicate operations. Erratic movement of the samplers can be reduced by moving them quickly through the faster, upper levels of the stream. Large boulders can interfere with the placement of samplers, and some will cause the samplers to tilt and ruin the sample. These locations need to be avoided. Watch upstream for floating debris, being prepared to lift the sampler to avoid being snagged.

Transit rates for depth-integrated suspended-sediment measurements can be calculated using revolutions of the sounding reel. The A-55 reel has a drum circumference of 1 foot, the B-56 reel a circumference of 1.5 feet. Thus when using a B-56 reel, the handle is turned once each second for a 1.5 fps transit rate.

Bedload samples collected with a Helly Smith sampler involve the same challenges for the operator as any cable system. High flows can cause rapid erratic movement as the sampler is lowered through the water column. Fast velocities near the surface will pull the sampler downstream. As the sampler passes into the slower velocities near the bottom, it will swing in under the suspension point, potentially scooping bottom materials and contaminating the sample. The operator must learn to lower the sampler to avoid this. While experience will be the best teacher, in general the sampler is lowered quickly through the fast water, or to about 2/3 of the depth. Then it is lowered more slowly in the deeper, slow water, allowing the sampler to swing back upstream. Finally, it is lowered the last increment to the bottom.

Following use, the sounding equipment, including the sounding reel, is removed from the site. The traveling block may be positioned near the middle of the stream and the cable locked in place with a cable clamp, or a chain and padlock may be used to lock the traveling block to the main housing.

MODIFICATIONS

In constructing the pulley housing, block and tailhold, consider the needs of your situation and make modifications when appropriate. Some suggestions below are untried. The described parts are referenced by numbers as they appear on the construction drawings in Appendix B. These suggestions include:

1. Weld the sides of the housing, reducing the time and expense of drilling and tapping for fastening screws (7).

2. Eliminate the idler pulley (9) and/or the counter pulley (10) in the housing. This may result in the cable slipping, but aircraft grade cable may help reduce this. The groove in the drive pulley (8), sounding sheave (52), and tail sheave (60) must match the cable diameter.

3. One-eighth inch cable has been used successfully for the applications on the Nez Perce National Forest. Larger streams may require a heavier cable. A structural engineer can determine the forces exerted for a system. The breaking strength of the sounding cable is considered in designing the load applied to the system, reflecting the possibility of snagging floating debris during measurements. The breaking strength of the B-56 sounding cable is 1,600 pounds. For a more complete discussion, see Wagner (1995).

4. A cover for the pulley housing may be desirable to prevent debris, such as conifer needles, from accumulating in the mechanism, and also deter vandalism. An open-ended box that slips over the pulley housing from the top would prevent the handle from being turned. Attachments to hold a padlock beneath the cable would secure this cover to the housing.

5. With no line counter, the counter shaft (16) could be simplified by eliminating the portion of the counter shaft that protrudes from the right housing side.

6. Modify the cable sheaves (49) of the traveling block assembly. The sheave on the near side bears most of the weight and resulting stress and wear. A 3/8" ID ball bearing could replace the bronze bearing (51) specified. The cable pulley (50) would need to be machined to accept the ball bearing.

7. The design of the traveling block assembly (35) could be modified. As pictured in figure 7, the bottom spacer (43) has been dropped, and the sides simplified. Parts (37), (38), (45), (46), and (47) have been combined into one piece. The back (36) is modified and similar to the front plate.

8. A further simplification of the traveling block assembly (35) is to eliminate one of the cable sheaves (49). The remaining sheave would be positioned in the middle of the center tie bar (40). Two plates would hold the single cable sheave above and the sounding sheave below.

9. One of the 3/8" x 16" turnbuckles could be eliminated. This cost-saving measure would reduce the range of adjustment available and may make it difficult to tighten the cable.

ACKNOWLEDGMENTS

Thanks to those who provided their technical knowledge and insights on cableways: Brooks Beegle, John Bowles, Lawrence Clark, Jim Frasier, Thomas Lisle, Nick Gerhardt, Gail Howard, Mike Rickly, Skip Rosquist, Sandra Ryan, Ron Torretta, and Fred Warner. Thanks to Lois Peterson of the Nez Perce National Forest for redrawing the construction plans, John Potyondy and Larry Schmidt of the Stream System Technology Center for making this paper a reality, as well as their technical assistance, encouragement and patience, and Karen Mora, Carol LoSapio, and Joyce VanDeWater for help with publication and graphics.

LITERATURE CITED

Buchanan, Thomas J. and William Somers. 1969. Discharge Measurements At Gaging Stations. Techniques of Water-Resources Investigations. U.S. Geological Survey. Book 3, Chap. A8.

Bureau of Reclamation. 1967. Water Measurement Manual: A Manual Pertaining Primarily To Measurement of Water For Irrigation Projects. U.S. Department of the Interior.

Great Britain, Dept. of the Environment, Water Data Unit, 1978. Portable current meter cableways and winches. Report of the Instruments and Methods Observation Group Technical Memorandum No. 17, Reading [England], 12 p.

Montana Department of Natural Resources and Conservation. 1976. Traveling Block Cableway (Drawing). Approved by Richard Bandy, Chief. Engineering Bureau, Water Resources Division.

Wagner, Russell. 1995. Stream-Gaging Cableways. Technical Water-Resources Investigations. U.S. Geological Survey. Book 3, Chap. A21.

U.S. Department of Agriculture. 1979. Traveling Block Cableway (Drawing). Drawn by Lassila. Lolo National Forest. Missoula, Montana.

APPENDIX A: SUPPLIES AND SUPPLIERS

Installation of posts:

- ☑ head block post
- ☑ tail block post
- ☑ (4) bags of redimix concrete
- ☑ Tools & miscellaneous: Post hole digger or shovels. Lumber may be used to brace the posts as the concrete dries. Saws or axes if the site needs to be cleared of brush. Carpenter's level or plumb bob. Waders to cross the stream. Survey level.

Installation of pulley blocks and carriage:

- ☑ head block, tail block, and carriage
- ☑ 1/8 inch wire rope/cable - aircraft grade cable twice the distance between the posts, with an additional 5–10 feet.
- ☑ (4) 1/8 inch cable clamps
- ☑ (4) 1/8 inch cable thimbles
- ☑ (2) ¼ inch X 16 inch turnbuckles
- ☑ Tools: wrenches, cable cutter

Calibration:

- ☑ (2) colors of enamel paints (paint pens or spray cans)
- ☑ measuring tape or tagline (100')
- ☑ sounding reel
- ☑ sounding weight

Operation:

Other available instruments and models are compatible with our cableway. These may be used depending on the measurements desired and situation. A suggested list:

Item	Model	Estimated Cost
sounding reel	B-56	$ 1,900.00
current meter	Price AA	$ 745.00
sounding weight	50C	$ 275.00
suspended sediment sampler	D74	$ 1,370.00
bedload sampler	BL84	$ 750.00

Hydrological equipment suppliers:

These suppliers are for reference only. Use of trade names is for the convenience of the reader and does not constitute endorsement by the USDA Forest Service. These products are neither tested nor endorsed by the author.

Rickly Hydrological Company
2710 Joyce Avenue
Columbus, OH 43211
(614)475-8310

Scientific Instruments
518 West Cherry Street
Milwaukee, WI 53212
(414) 263-1600

Federal agencies may obtain equipment through:

U.S. Geological Survey
Hydrological Instrumentation Facility
Building 2101
Stennis Space Center, MS 39529-6000
1-800-382-0634

Federal Interagency Sedimentation Project

Waterways Experiment Station
3909 Halls Ferry Road
Vicksburg, MS 39180-2721
(601) 634-2721

APPENDIX B: CABLEWAY PLANS

A full-sized set of scaled AutoCAD plans (*.dwg format) as well as standard graphics files (*.tif format) for printing are available for downloading from the internet from the Stream Systems Technology Center web page at http://www.stream.fs.fed.us. Copies of the plans can also be obtained from the USDA Forest Service, Rocky Mountain Research

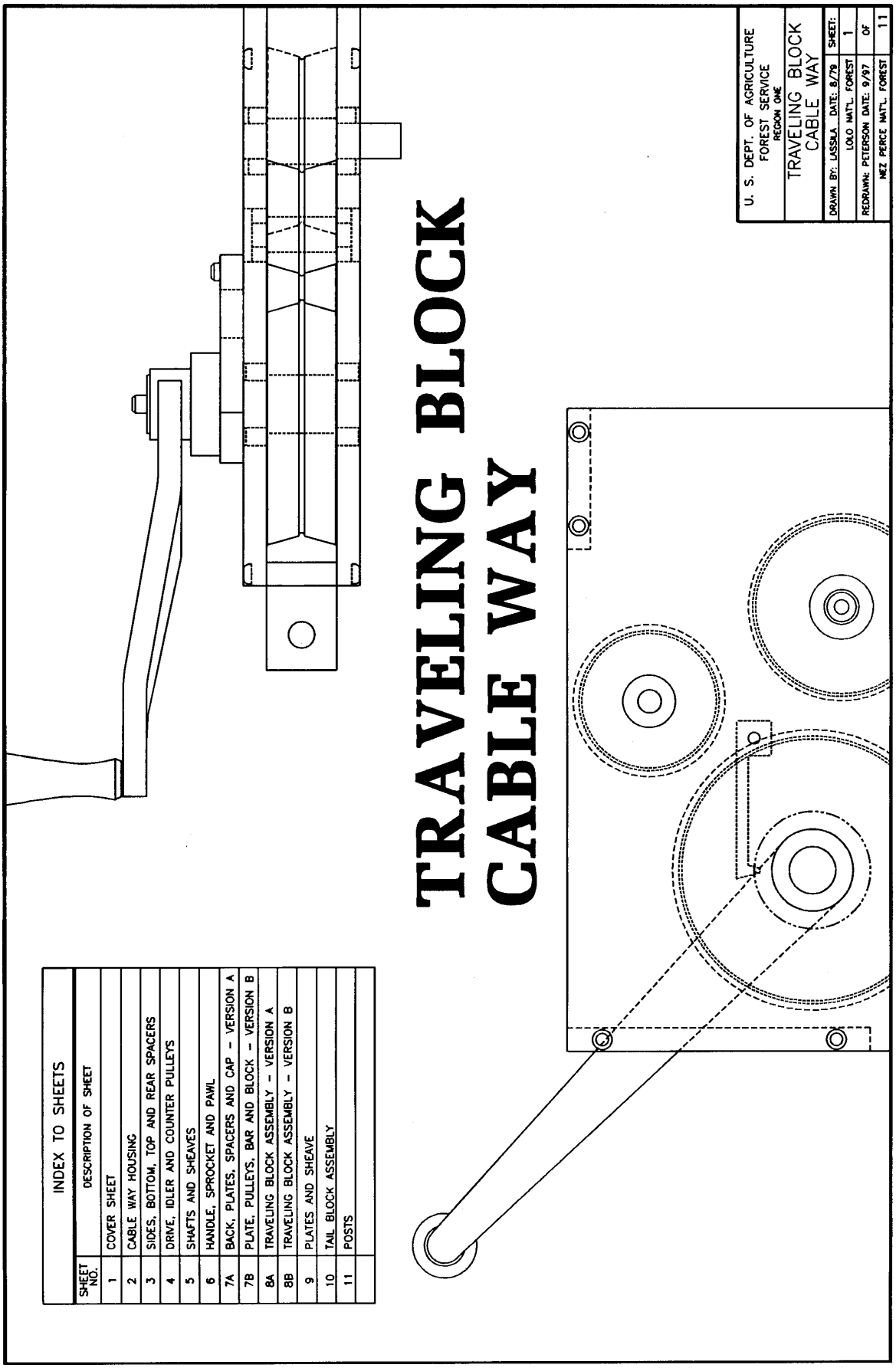
TRAVELING BLOCK
CABLE WAY
U. S. DEPT. OF AGRICULTURE
FOREST SERVICE
REGION ONE
TRAVELING BLOCK
CABLE WAY
DRAWN BY: LASSILA DATE: 8/79
LOLO NAT'L. FOREST
REDRAWN: PETERSON DATE: 9/97
NEZ PERCE NAT'L. FOREST
SHEET: 1 OF 11
INDEX TO SHEETS
SHEET NO.
DESCRIPTION OF SHEET
1 COVER SHEET
2 CABLE WAY HOUSING
3 SIDES, BOTTOM, TOP AND REAR SPACERS
4 DRIVE, IDLER AND COUNTER PULLEYS
5 SHAFTS AND SHEAVES
6 HANDLE, SPROCKET AND PAWL
7A BACK, PLATES, SPACERS AND CAP - VERSION A
7B PLATE, PULLEYS, BAR AND BLOCK - VERSION B
8A TRAVELING BLOCK ASSEMBLY - VERSION A
8B TRAVELING BLOCK ASSEMBLY - VERSION B
9 PLATES AND SHEAVE
10 TAIL BLOCK ASSEMBLY
11 POSTS

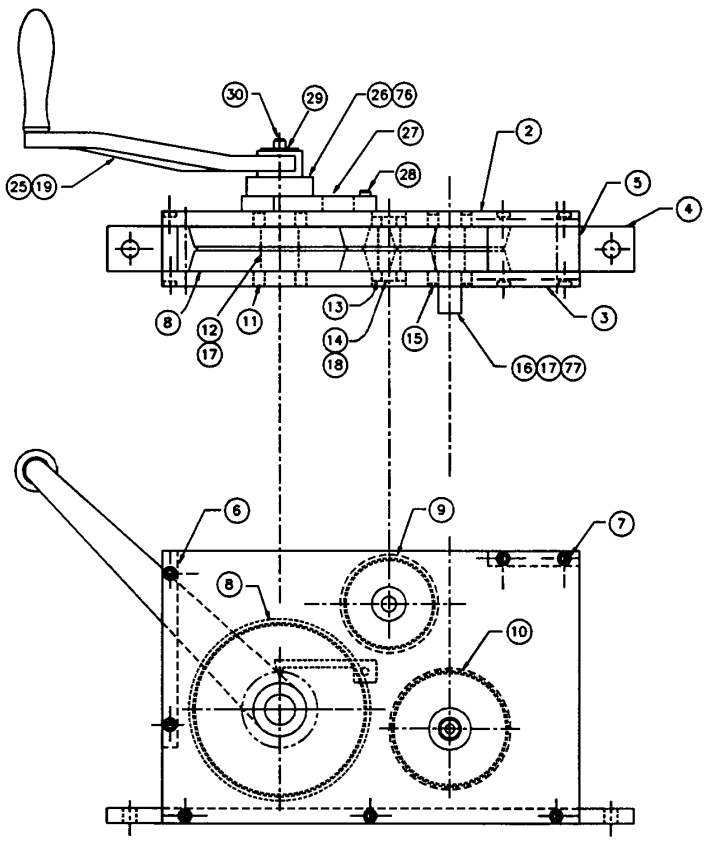

1 CABLE WAY HOUSING

MATERIALS LIST			
NO.	PART NAME	REQ'D.	MATERIAL–DESCRIPTION
1	CABLE WAY HOUSING	1	PARTS 2–30
2	LEFT SIDE	1	PART 2
3	RIGHT SIDE	1	PART 3
4	BOTTOM	1	PART 4
5	TOP SPACER	1	PART 5
6	REAR SPACER	1	PART 6
7	SCREWS	14	1/4"–20 NC X 5/8" LG. SOCKET HD CAP SCREW
8	DRIVE PULLEY	1	PART 8
9	IDLER PULLEY	1	PART 9
10	COUNTER PULLEY	1	PART 10
11	BEARING	2	.9843" BORE X 1.8504" OD X .4724" WIDE RADIAL
			BEARING WITH TWO SEALS FAFNIR #9105PP
12	DRIVE SHAFT	1	PART 12
13	BEARING	2	.4724" BORE X 1.1024" OD X .3150" WIDE RADIAL
			BEARING WITH TWO SEALS FAFNIR #9101PP
14	IDLER SHAFT	1	PART 14
15	BEARING	2	.6693" BORE X 1.3780" OD X .3937" WIDE RADIAL
			BEARING WITH TWO SEALS FAFNIR #9103PP
16	COUNTER SHAFT	1	PART 16
17	KEY	2	1/4" SQ. X 1/–1/4" LG. ROUND BOTH ENDS KEY
18	KEY	1	3/16" SQ. X 1/–14" LG. ROUND BOTH ENDS KEY
19	HANDLE	1	PARTS 20–24
25	KEY	1	3/16" SQ. X 7/8" LG. ROUND ONE END KEY
26	SPROCKET	1	PART 26
27	PAWL	1	PART 27
28	SCREW	1	1/4" X 1/2" LG. SOCKET HD SHOULDER SCREW
29	WASHER	1	1/4" FENDER WASHER 9/32" ID X 1–1/4" OD X 1/16" ST.
30	SCREW	1	1/4"–20 NC X 5/8" LG. SOCKET HD CAP SCREW
76	KEY	1	1/4" SQ. X 1" LG. ROUND BOTH ENDS KEY
77	SET SCREW	1	#8–32 NC X 1/4" LG. SOCKET SET SCREW

U. S. DEPT. OF AGRICULTURE
FOREST SERVICE
REGION ONE

TRAVELING BLOCK
CABLE WAY

DRAWN BY: LASSILA DATE: 8/79	SHEET:
LOLO NAT'L. FOREST	2
REDRAWN: PETERSON DATE: 9/97	OF
NEZ PERCE NAT'L. FOREST	11

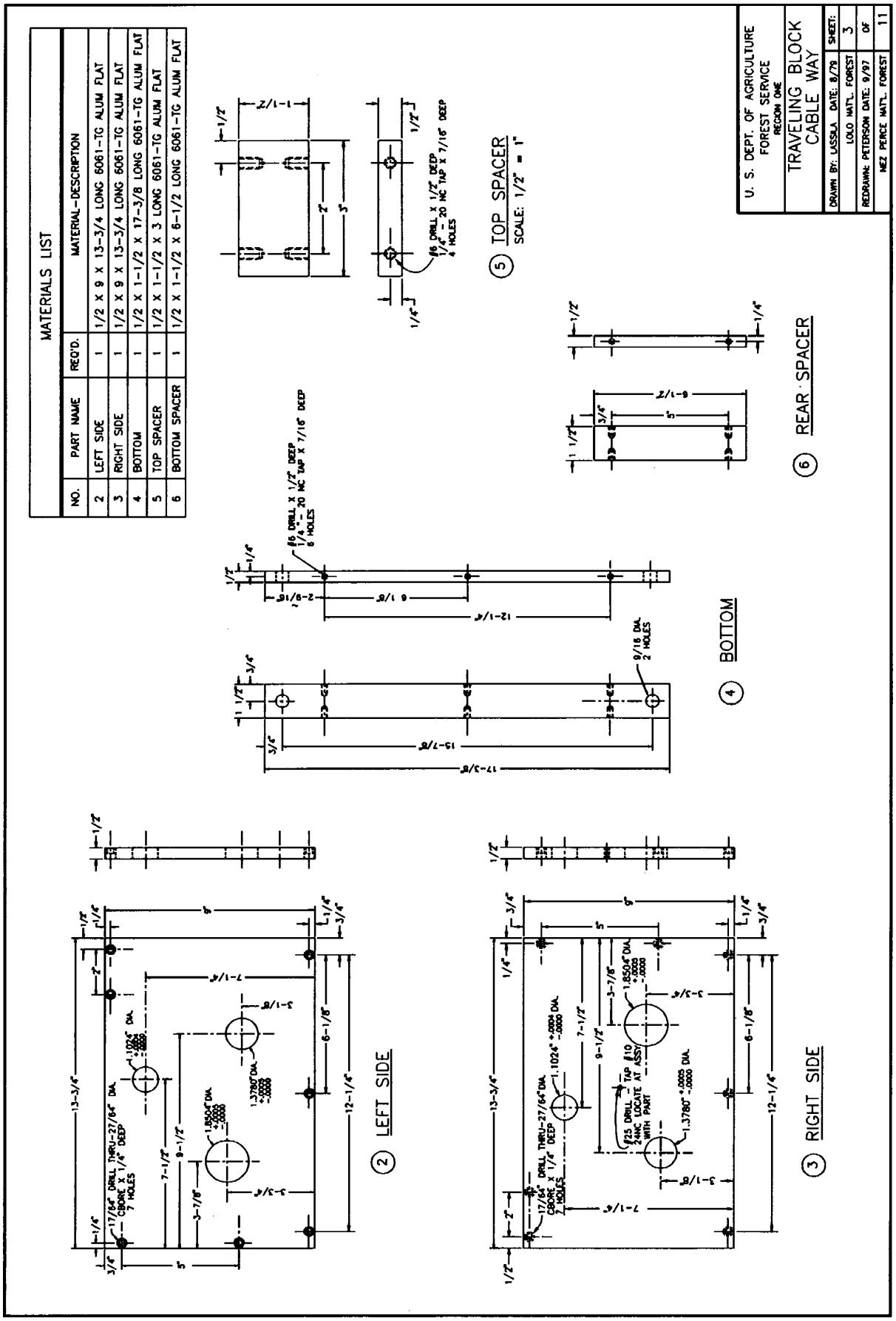
MATERIALS LIST
NO. | PART NAME | REQ'D. | MATERIAL-DESCRIPTION
2 | LEFT SIDE | 1 | 1/2 X 9 X 13-3/4 LONG 6061-TG ALUM FLAT
3 | RIGHT SIDE | 1 | 1/2 X 9 X 13-3/4 LONG 6061-TG ALUM FLAT
4 | BOTTOM | 1 | 1/2 X 1-1/2 X 17-3/8 LONG 6061-TG ALUM FLAT
5 | TOP SPACER | 1 | 1/2 X 1-1/2 X 3 LONG 6061-TG ALUM FLAT
6 | BOTTOM SPACER | 1 | 1/2 X 1-1/2 X 6-1/2 LONG 6061-TG ALUM FLAT
U. S. DEPT. OF AGRICULTURE
FOREST SERVICE
REGION ONE
TRAVELING BLOCK CABLE WAY
DRAWN BY: LASSLA DATE: 8/79
SHEET: 3
LOLO NAT'L. FOREST
REDRAWN: PETERSON DATE: 9/97
OF 11
NEZ PERCE NAT'L. FOREST
5 TOP SPACER
SCALE: 1/2" = 1"
6 REAR SPACER
4 BOTTOM
2 LEFT SIDE
3 RIGHT SIDE

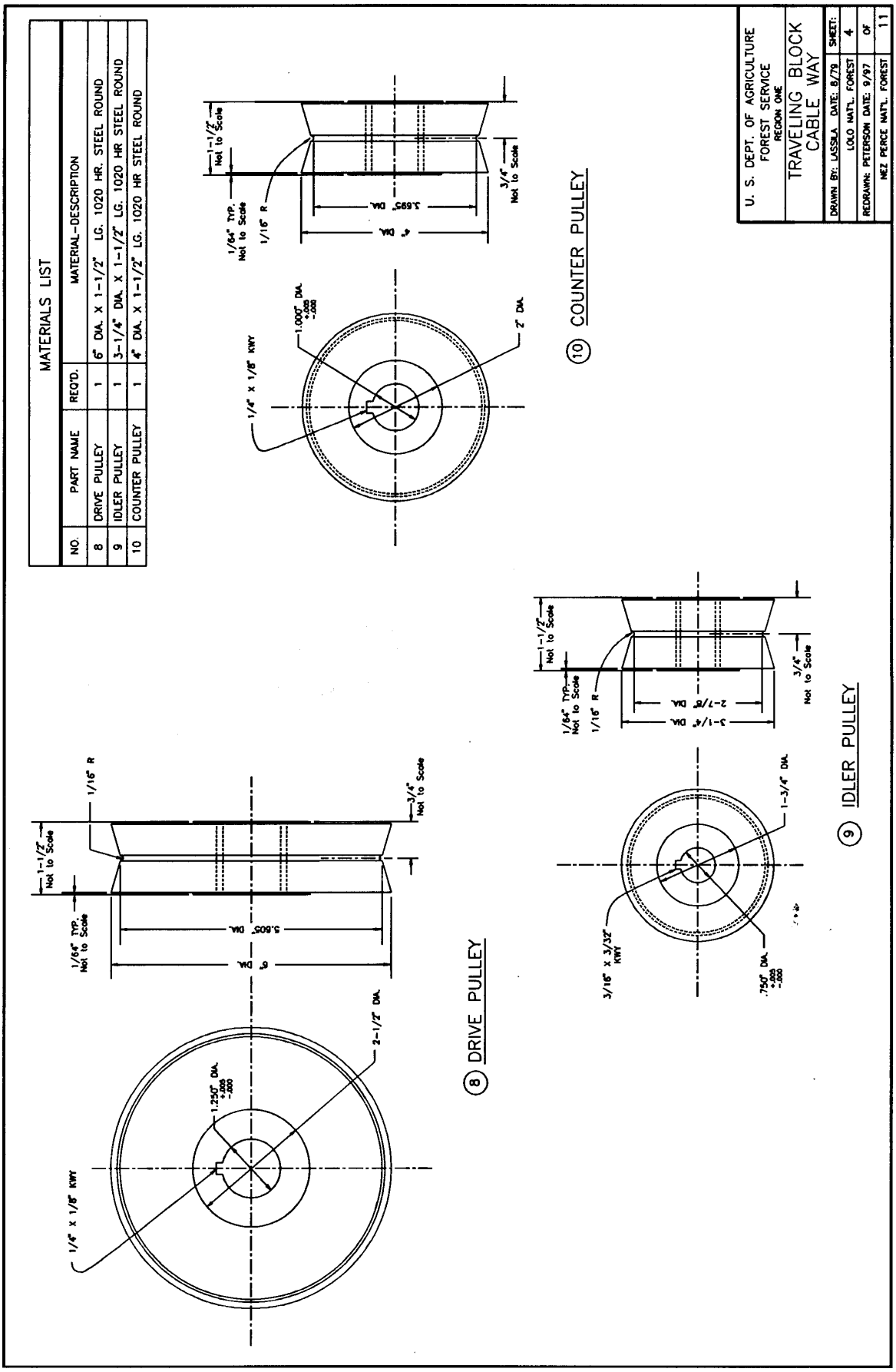
MATERIALS LIST
NO. | PART NAME | REQ'D. | MATERIAL-DESCRIPTION
8 | DRIVE PULLEY | 1 | 6" DIA. X 1-1/2" LG. 1020 HR. STEEL ROUND
9 | IDLER PULLEY | 1 | 3-1/4" DIA. X 1-1/2" LG. 1020 HR STEEL ROUND
10 | COUNTER PULLEY | 1 | 4" DIA. X 1-1/2" LG. 1020 HR STEEL ROUND
U. S. DEPT. OF AGRICULTURE
FOREST SERVICE
REGION ONE
TRAVELING BLOCK CABLE WAY
DRAWN BY: LASSILA DATE: 8/79
LOLO NAT'L. FOREST
REDRAWN: PETERSON DATE: 9/97
NEZ PERCE NAT'L. FOREST
SHEET: 4 OF 11
1/4" x 1/8" KWY
1.250" DIA. +.005 -.000
2-1/2" DIA.
6" DIA.
5.605" DIA.
1/16" R
1/64" TYP. Not to Scale
1-1/2" Not to Scale
3/4" Not to Scale
8 DRIVE PULLEY
3/16" x 3/32" KWY
.750" DIA. +.005 -.000
1-3/4" DIA.
3-1/4" DIA.
2-7/8" DIA.
9 IDLER PULLEY
1/4" x 1/8" KWY
1.000" DIA. +.005 -.000
2" DIA.
4" DIA.
2.695" DIA.
10 COUNTER PULLEY

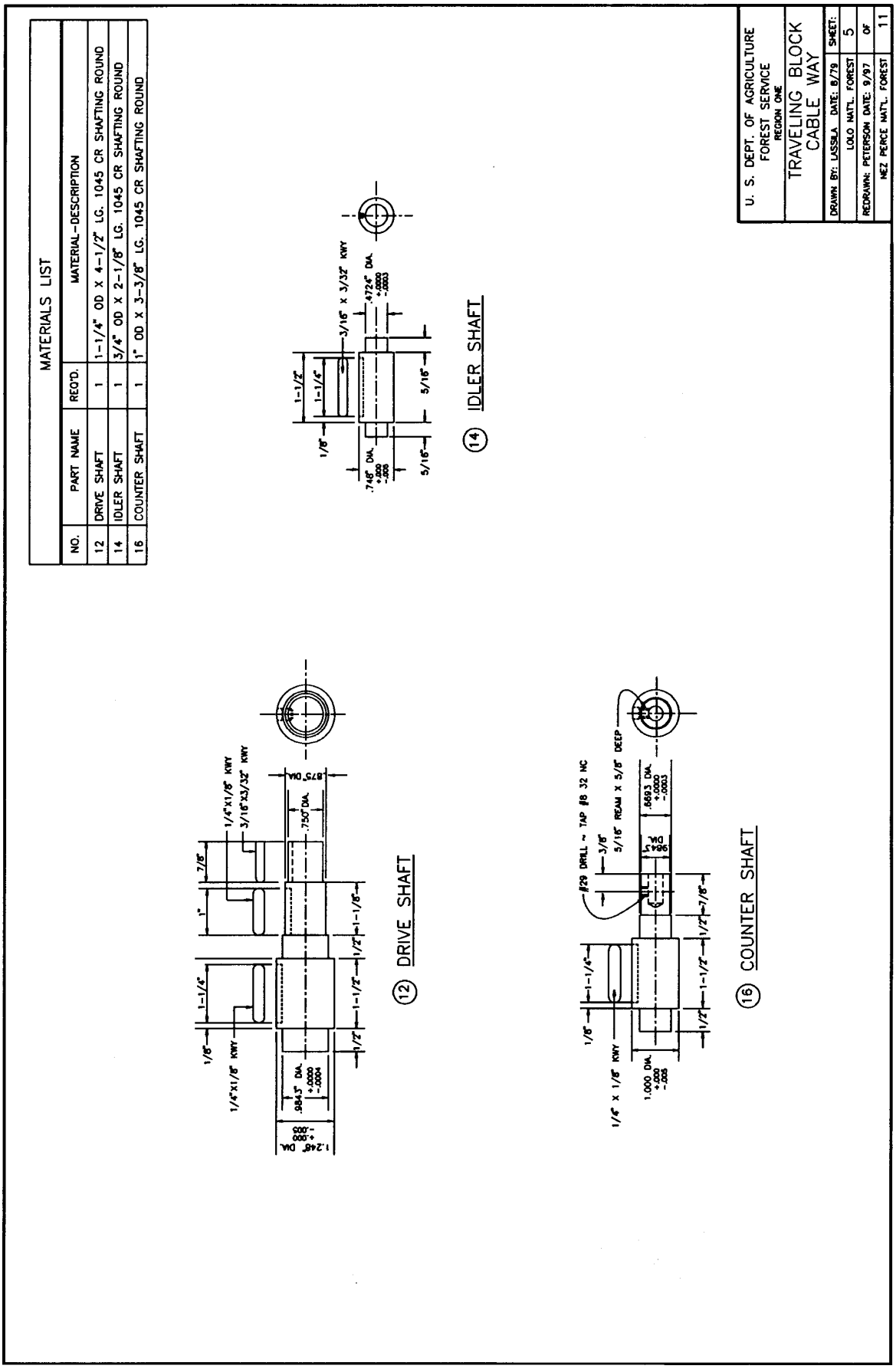
MATERIALS LIST
NO. | PART NAME | REQ'D. | MATERIAL-DESCRIPTION
12 | DRIVE SHAFT | 1 | 1-1/4" OD X 4-1/2" LG. 1045 CR SHAFTING ROUND
14 | IDLER SHAFT | 1 | 3/4" OD X 2-1/8" LG. 1045 CR SHAFTING ROUND
16 | COUNTER SHAFT | 1 | 1" OD X 3-3/8" LG. 1045 CR SHAFTING ROUND
U. S. DEPT. OF AGRICULTURE
FOREST SERVICE
REGION ONE
TRAVELING BLOCK CABLE WAY
DRAWN BY: LASSILA DATE: 8/79
SHEET: 5
LOLO NAT'L. FOREST
REDRAWN: PETERSON DATE: 9/97
OF 11
NEZ PERCE NAT'L. FOREST
(14) IDLER SHAFT
(12) DRIVE SHAFT
(16) COUNTER SHAFT

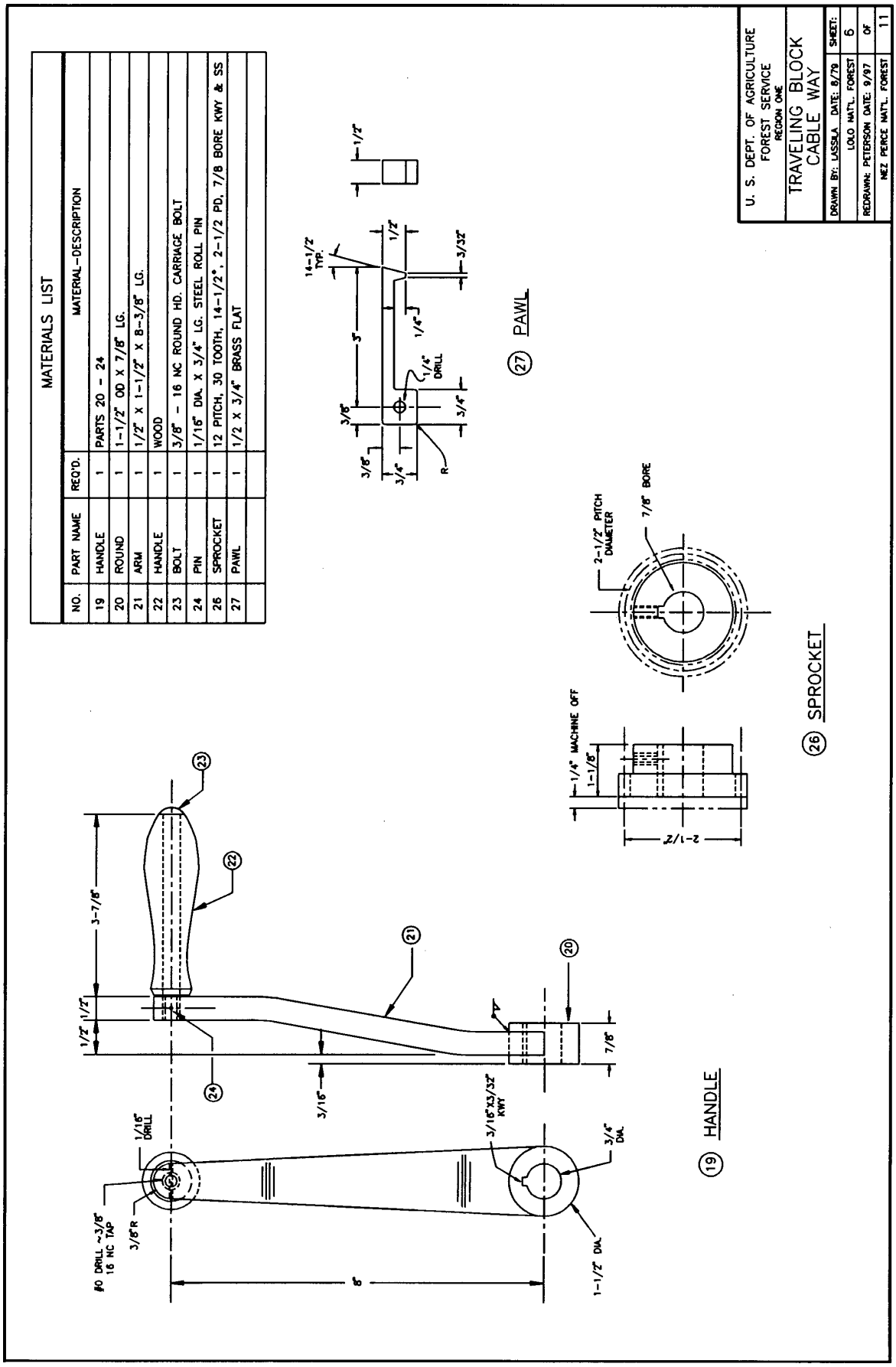
MATERIALS LIST
NO. | PART NAME | REQ'D. | MATERIAL-DESCRIPTION
19 | HANDLE | 1 | PARTS 20 - 24
20 | ROUND | 1 | 1-1/2" OD X 7/8" LG.
21 | ARM | 1 | 1/2" X 1-1/2" X 8-3/8" LG.
22 | HANDLE | 1 | WOOD
23 | BOLT | 1 | 3/8" - 16 NC ROUND HD. CARRIAGE BOLT
24 | PIN | 1 | 1/16" DIA. X 3/4" LG. STEEL ROLL PIN
26 | SPROCKET | 1 | 12 PITCH, 30 TOOTH, 14-1/2°, 2-1/2 PD, 7/8 BORE KWY & SS
27 | PAWL | 1 | 1/2 X 3/4" BRASS FLAT
U. S. DEPT. OF AGRICULTURE
FOREST SERVICE
REGION ONE
TRAVELING BLOCK CABLE WAY
DRAWN BY: LASSILA DATE: 8/79
SHEET: 6
LOLO NAT'L. FOREST
OF 11
REDRAWN: PETERSON DATE: 9/97
NEZ PERCE NAT'L. FOREST
14-1/2° TYP.
1/4" DRILL
R
27 PAWL
2-1/2" PITCH DIAMETER
7/8" BORE
1/4" MACHINE OFF
1-1/8"
2-1/2"
26 SPROCKET
3-7/8"
1/2"
1/2"
3/16"
3/16"X3/32" KWY
7/8"
1/16" DRILL
#0 DRILL ~3/8" 16 NC TAP
3/8"R
8"
1-1/2" DIA.
3/4" DIA.
19 HANDLE

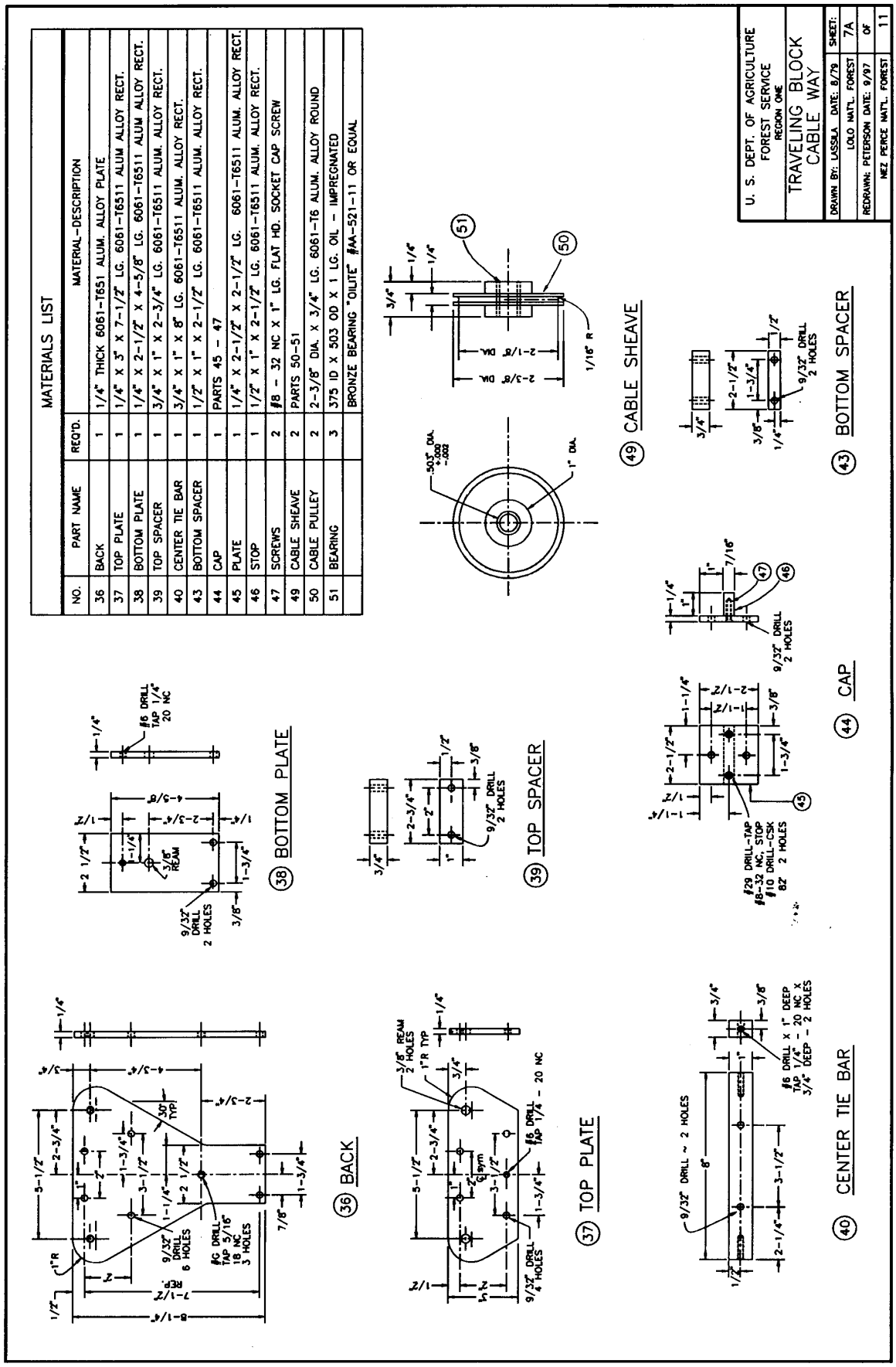
MATERIALS LIST
NO. | PART NAME | REQ'D. | MATERIAL-DESCRIPTION
36 | BACK | 1 | 1/4" THICK 6061-T651 ALUM. ALLOY PLATE
37 | TOP PLATE | 1 | 1/4" X 3" X 7-1/2" LG. 6061-T6511 ALUM ALLOY RECT.
38 | BOTTOM PLATE | 1 | 1/4" X 2-1/2" X 4-5/8" LG. 6061-T6511 ALUM ALLOY RECT.
39 | TOP SPACER | 1 | 3/4" X 1" X 2-3/4" LG. 6061-T6511 ALUM. ALLOY RECT.
40 | CENTER TIE BAR | 1 | 3/4" X 1" X 8" LG. 6061-T6511 ALUM. ALLOY RECT.
43 | BOTTOM SPACER | 1 | 1/2" X 1" X 2-1/2" LG. 6061-T6511 ALUM. ALLOY RECT.
44 | CAP | 1 | PARTS 45 - 47
45 | PLATE | 1 | 1/4" X 2-1/2" X 2-1/2" LG. 6061-T6511 ALUM. ALLOY RECT.
46 | STOP | 1 | 1/2" X 1" X 2-1/2" LG. 6061-T6511 ALUM. ALLOY RECT.
47 | SCREWS | 2 | #8 - 32 NC X 1" LG. FLAT HD. SOCKET CAP SCREW
49 | CABLE SHEAVE | 2 | PARTS 50-51
50 | CABLE PULLEY | 2 | 2-3/8" DIA. X 3/4" LG. 6061-T6 ALUM. ALLOY ROUND
51 | BEARING | 3 | .375 ID X .503 OD X 1 LG. OIL - IMPREGNATED
| | | | BRONZE BEARING "OILITE" #AA-521-11 OR EQUAL
U. S. DEPT. OF AGRICULTURE
FOREST SERVICE
REGION ONE
TRAVELING BLOCK CABLE WAY
DRAWN BY: LASSILA DATE: 8/79
LOLO NAT'L. FOREST
REDRAWN: PETERSON DATE: 9/97
NEZ PERCE NAT'L. FOREST
SHEET: 7A
OF 11
36 BACK
38 BOTTOM PLATE
39 TOP SPACER
37 TOP PLATE
40 CENTER TIE BAR
49 CABLE SHEAVE
44 CAP
43 BOTTOM SPACER

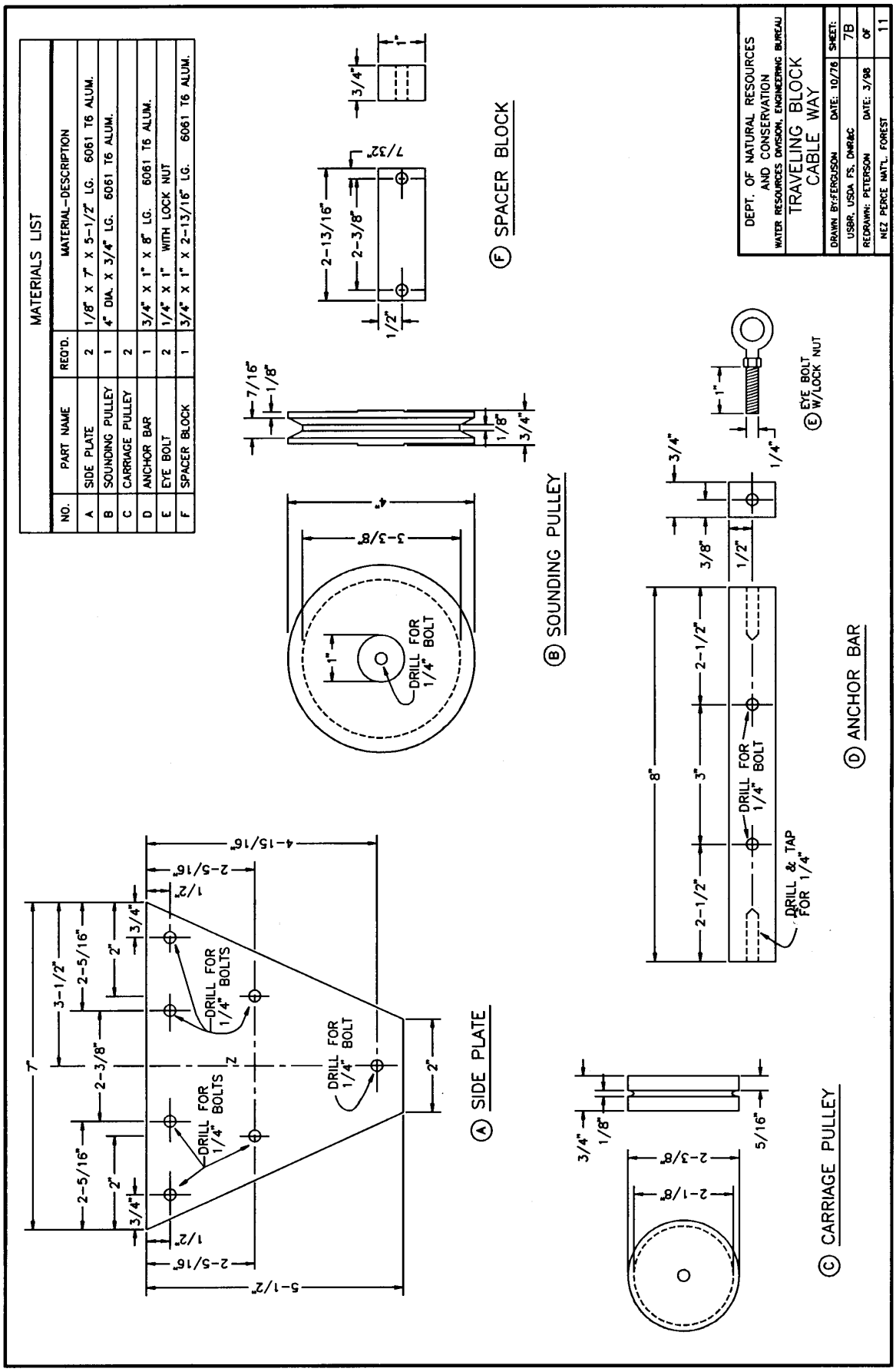
MATERIALS LIST
NO. | PART NAME | REQ'D. | MATERIAL-DESCRIPTION
A | SIDE PLATE | 2 | 1/8" X 7" X 5-1/2" LG. 6061 T6 ALUM.
B | SOUNDING PULLEY | 1 | 4" DIA. X 3/4" LG. 6061 T6 ALUM.
C | CARRIAGE PULLEY | 2 |
D | ANCHOR BAR | 1 | 3/4" X 1" X 8" LG. 6061 T6 ALUM.
E | EYE BOLT | 2 | 1/4" X 1" WITH LOCK NUT
F | SPACER BLOCK | 1 | 3/4" X 1" X 2-13/16" LG. 6061 T6 ALUM.
DEPT. OF NATURAL RESOURCES AND CONSERVATION
WATER RESOURCES DIVISION, ENGINEERING BUREAU
TRAVELING BLOCK CABLE WAY
DRAWN BY: FERGUSON DATE: 10/78
SHEET: 7B
USBR, USDA FS, DNR&C
REDRAWN: PETERSON DATE: 3/98
OF 11
NEZ PERCE NAT'L. FOREST
Ⓐ SIDE PLATE
Ⓑ SOUNDING PULLEY
Ⓒ CARRIAGE PULLEY
Ⓓ ANCHOR BAR
Ⓔ EYE BOLT W/LOCK NUT
Ⓕ SPACER BLOCK
DRILL FOR 1/4" BOLTS
DRILL FOR 1/4" BOLT
DRILL & TAP FOR 1/4"

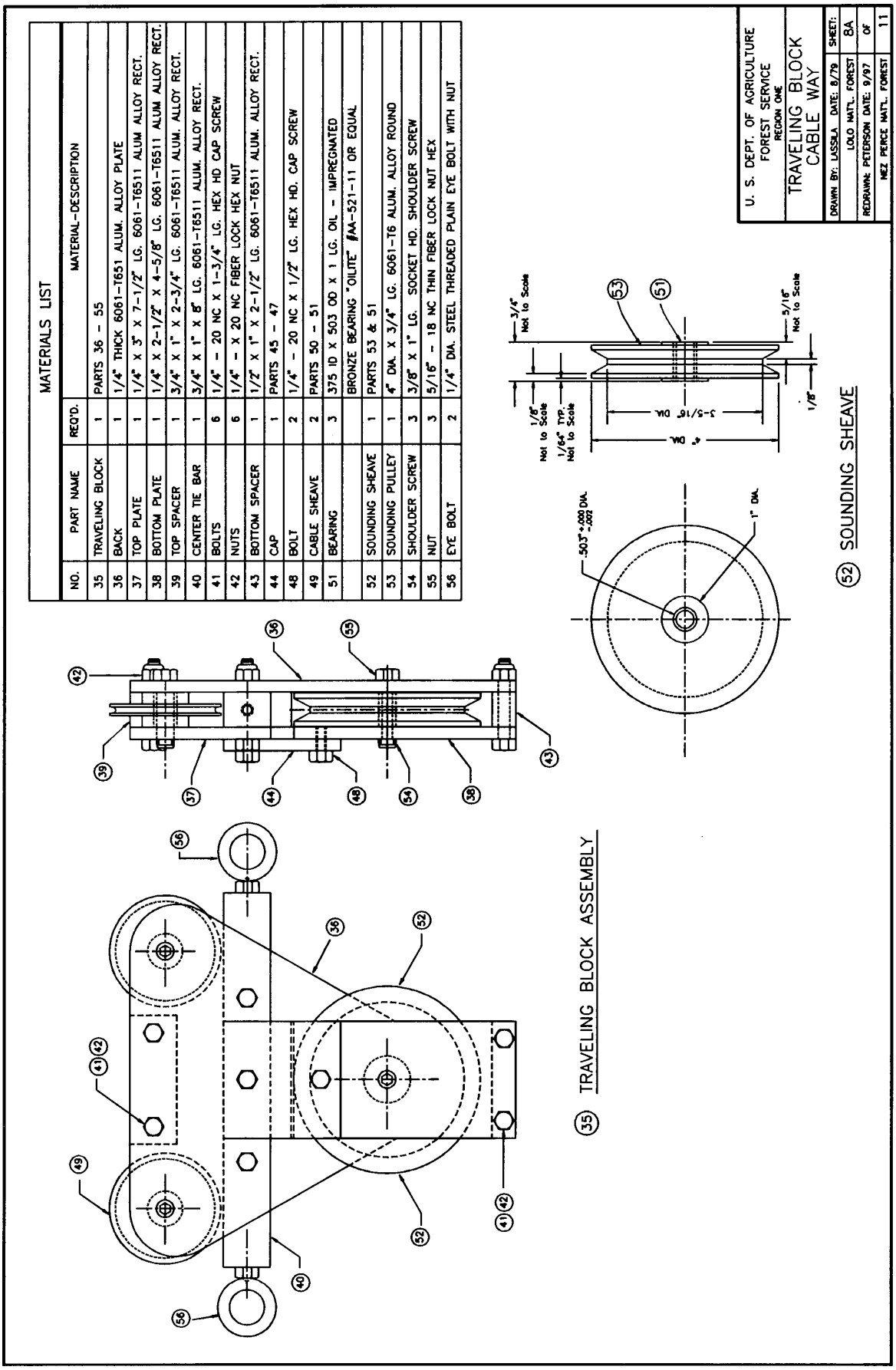
MATERIALS LIST
NO. | PART NAME | REQ'D. | MATERIAL-DESCRIPTION
35 | TRAVELING BLOCK | 1 | PARTS 36 - 55
36 | BACK | 1 | 1/4" THICK 6061-T651 ALUM. ALLOY PLATE
37 | TOP PLATE | 1 | 1/4" X 3" X 7-1/2" LG. 6061-T6511 ALUM ALLOY RECT.
38 | BOTTOM PLATE | 1 | 1/4" X 2-1/2" X 4-5/8" LG. 6061-T6511 ALUM ALLOY RECT.
39 | TOP SPACER | 1 | 3/4" X 1" X 2-3/4" LG. 6061-T6511 ALUM. ALLOY RECT.
40 | CENTER TIE BAR | 1 | 3/4" X 1" X 8" LG. 6061-T6511 ALUM. ALLOY RECT.
41 | BOLTS | 6 | 1/4" - 20 NC X 1-3/4" LG. HEX HD CAP SCREW
42 | NUTS | 6 | 1/4" - X 20 NC FIBER LOCK HEX NUT
43 | BOTTOM SPACER | 1 | 1/2" X 1" X 2-1/2" LG. 6061-T6511 ALUM. ALLOY RECT.
44 | CAP | 1 | PARTS 45 - 47
48 | BOLT | 2 | 1/4" - 20 NC X 1/2" LG. HEX HD. CAP SCREW
49 | CABLE SHEAVE | 2 | PARTS 50 - 51
51 | BEARING | 3 | 375 ID X 503 OD X 1 LG. OIL - IMPREGNATED
| | | | BRONZE BEARING "OILITE" #AA-521-11 OR EQUAL
52 | SOUNDING SHEAVE | 1 | PARTS 53 & 51
53 | SOUNDING PULLEY | 1 | 4" DIA. X 3/4" LG. 6061-T6 ALUM. ALLOY ROUND
54 | SHOULDER SCREW | 3 | 3/8" X 1" LG. SOCKET HD. SHOULDER SCREW
55 | NUT | 3 | 5/16" - 18 NC THIN FIBER LOCK NUT HEX
56 | EYE BOLT | 2 | 1/4" DIA. STEEL THREADED PLAIN EYE BOLT WITH NUT
U. S. DEPT. OF AGRICULTURE
FOREST SERVICE
REGION ONE
TRAVELING BLOCK
CABLE WAY
DRAWN BY: LASSILA DATE: 8/79
SHEET:
LOLO NATL. FOREST
8A
REDRAWN: PETERSON DATE: 9/97
OF
NEZ PERCE NATL. FOREST
11
TRAVELING BLOCK ASSEMBLY
SOUNDING SHEAVE
3/4" Not to Scale
1/8" Not to Scale
1/64" TYP. Not to Scale
5/16" Not to Scale
1/8"
4" DIA.
3-5/16" DIA.
.503"+.000 -.002 DIA.
1" DIA.

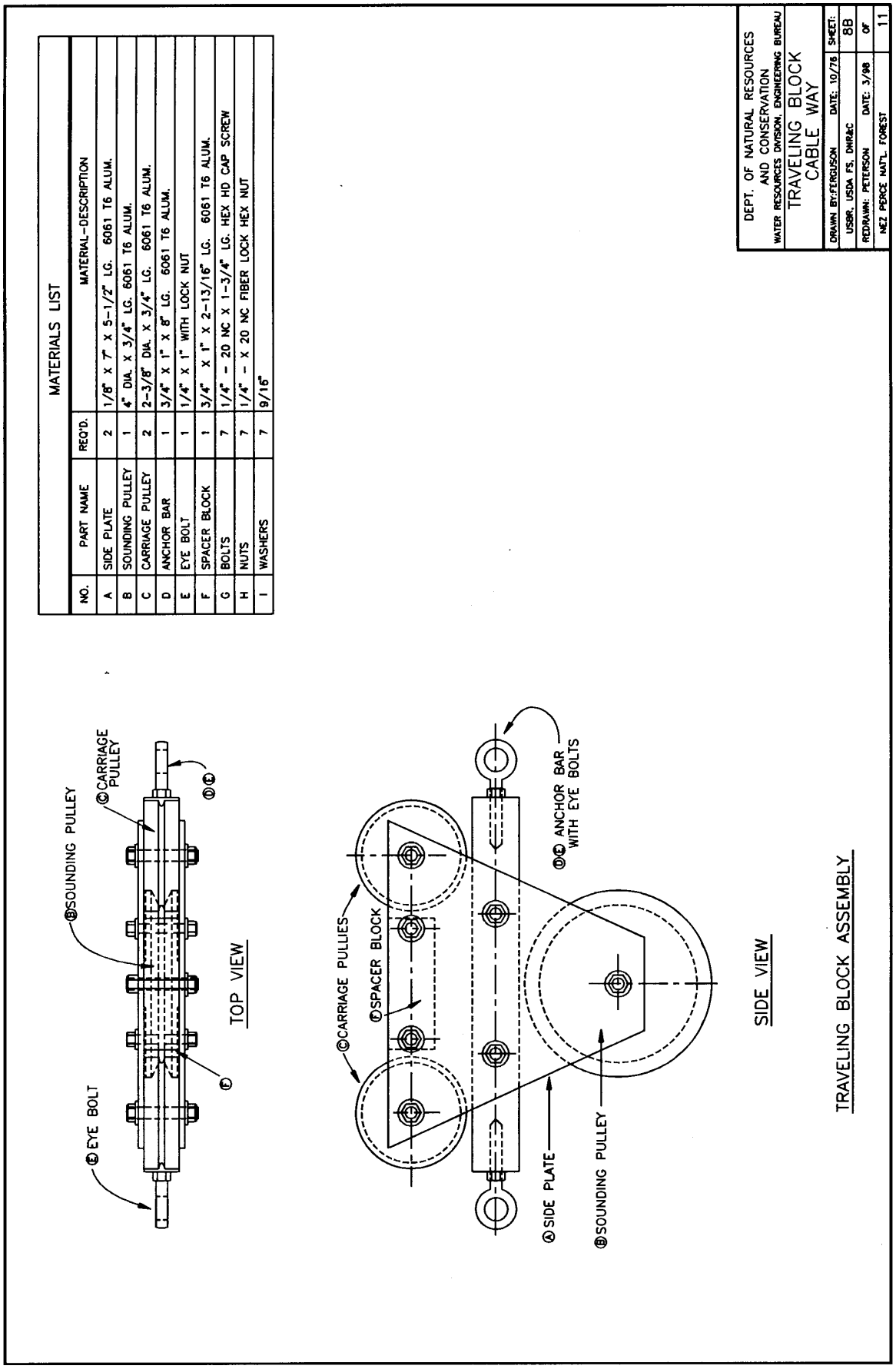
MATERIALS LIST
NO. | PART NAME | REQ'D. | MATERIAL-DESCRIPTION
A | SIDE PLATE | 2 | 1/8" X 7" X 5-1/2" LG. 6061 T6 ALUM.
B | SOUNDING PULLEY | 1 | 4" DIA. X 3/4" LG. 6061 T6 ALUM.
C | CARRIAGE PULLEY | 2 | 2-3/8" DIA. X 3/4" LG. 6061 T6 ALUM.
D | ANCHOR BAR | 1 | 3/4" X 1" X 8" LG. 6061 T6 ALUM.
E | EYE BOLT | 1 | 1/4" X 1" WITH LOCK NUT
F | SPACER BLOCK | 1 | 3/4" X 1" X 2-13/16" LG. 6061 T6 ALUM.
G | BOLTS | 7 | 1/4" - 20 NC X 1-3/4" LG. HEX HD CAP SCREW
H | NUTS | 7 | 1/4" - X 20 NC FIBER LOCK HEX NUT
I | WASHERS | 7 | 9/16"
DEPT. OF NATURAL RESOURCES AND CONSERVATION
WATER RESOURCES DIVISION, ENGINEERING BUREAU
TRAVELING BLOCK CABLE WAY
DRAWN BY: FERGUSON DATE: 10/78
SHEET: 8B
USSR, USDA FS, DNRaC
REDRAWN: PETERSON DATE: 3/98
OF 11
NEZ PERCE NAT'L FOREST
EYE BOLT
SOUNDING PULLEY
CARRIAGE PULLEY
TOP VIEW
CARRIAGE PULLIES
SPACER BLOCK
ANCHOR BAR WITH EYE BOLTS
SIDE PLATE
SOUNDING PULLEY
SIDE VIEW
TRAVELING BLOCK ASSEMBLY

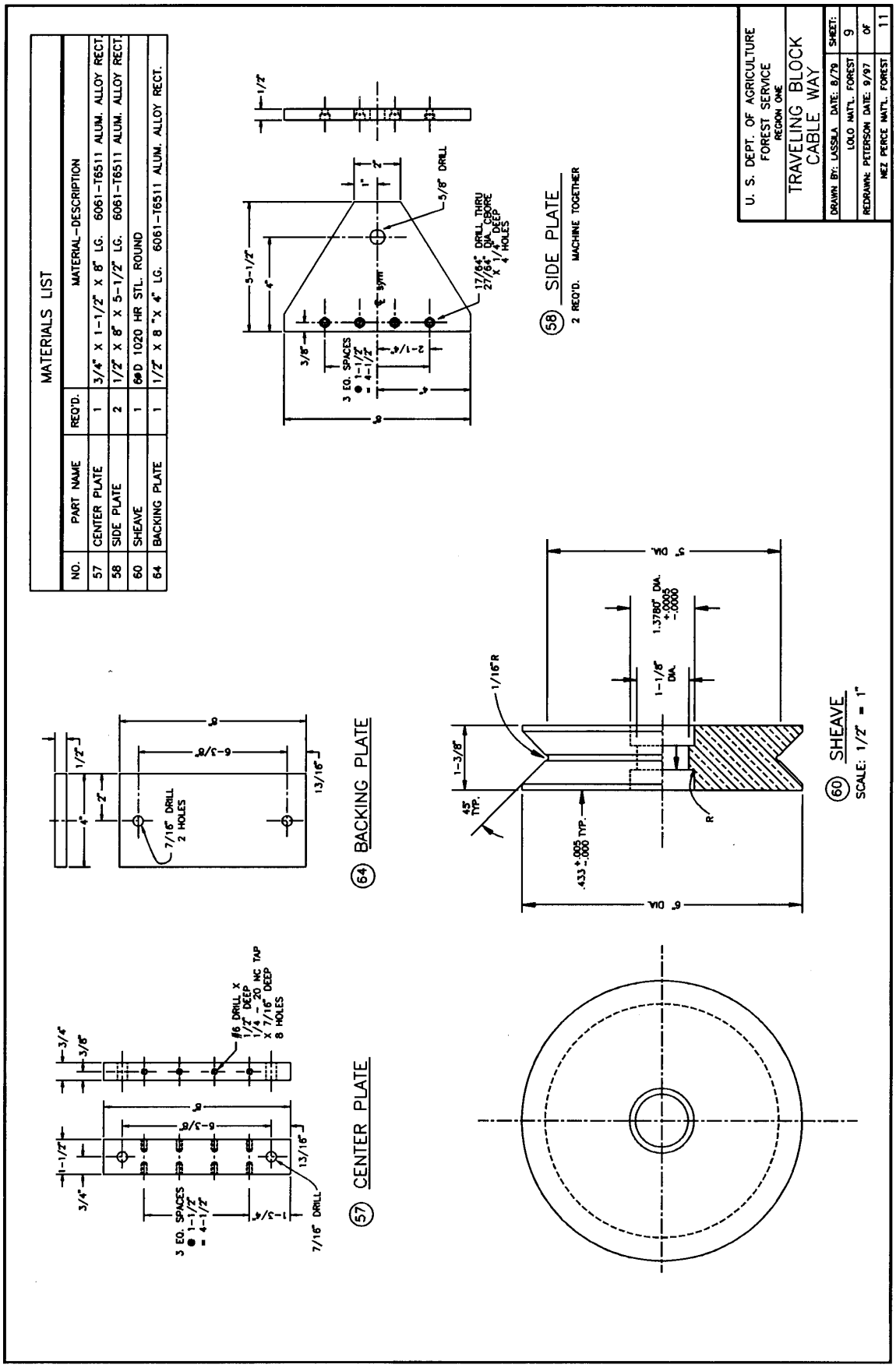
MATERIALS LIST
NO. | PART NAME | REQ'D. | MATERIAL-DESCRIPTION
57 | CENTER PLATE | 1 | 3/4" X 1-1/2" X 8" LG. 6061-T6511 ALUM. ALLOY RECT.
58 | SIDE PLATE | 2 | 1/2" X 8" X 5-1/2" LG. 6061-T6511 ALUM. ALLOY RECT.
60 | SHEAVE | 1 | 6" D 1020 HR STL. ROUND
64 | BACKING PLATE | 1 | 1/2" X 8 "X 4" LG. 6061-T6511 ALUM. ALLOY RECT.
U. S. DEPT. OF AGRICULTURE
FOREST SERVICE
REGION ONE
TRAVELING BLOCK CABLE WAY
DRAWN BY: LASSILA DATE: 8/79
SHEET: 9
LOLO NAT'L. FOREST
REDRAWN: PETERSON DATE: 9/97
OF 11
NEZ PERCE NAT'L. FOREST
58 SIDE PLATE
2 REQ'D. MACHINE TOGETHER
5/8" DRILL
17/64" DRILL THRU 27/64" DIA. C'BORE X 1/4" DEEP 4 HOLES
3 EQ. SPACES @ 1-1/2" = 4-1/2"
64 BACKING PLATE
7/16" DRILL 2 HOLES
13/16"
57 CENTER PLATE
#6 DRILL X 1/2" DEEP 1/4-20 NC TAP X 7/16" DEEP 8 HOLES
7/16" DRILL
60 SHEAVE
SCALE: 1/2" = 1"
1/16"R
1.3780" DIA. +.0005 -.0000
1-1/8" DIA.
.433 ± .005 -.000 TYP.
45° TYP.
6" DIA.
5" DIA.

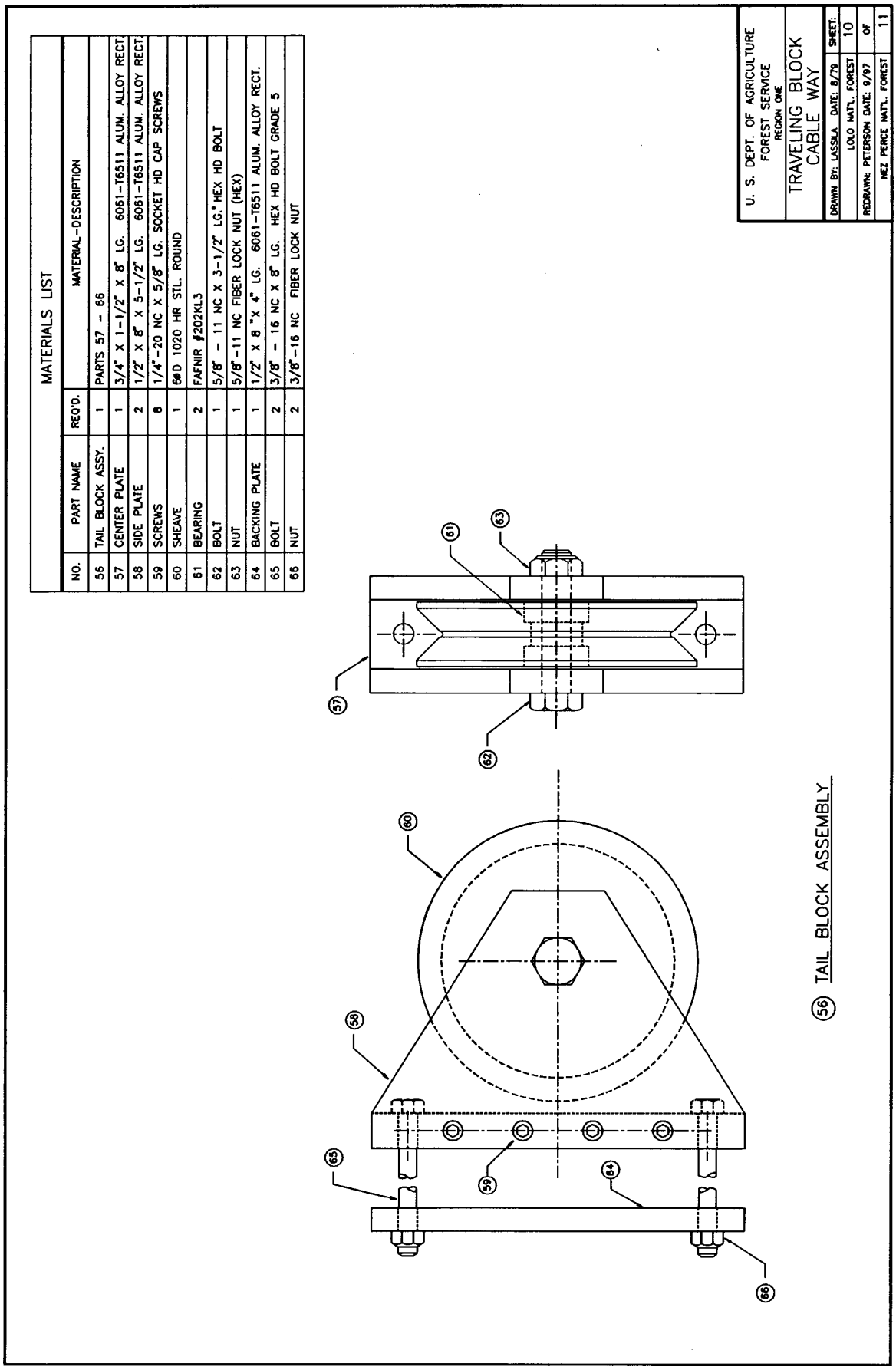
MATERIALS LIST
NO. | PART NAME | REQ'D. | MATERIAL-DESCRIPTION
56 | TAIL BLOCK ASSY. | 1 | PARTS 57 - 66
57 | CENTER PLATE | 1 | 3/4" X 1-1/2" X 8" LG. 6061-T6511 ALUM. ALLOY RECT.
58 | SIDE PLATE | 2 | 1/2" X 8" X 5-1/2" LG. 6061-T6511 ALUM. ALLOY RECT.
59 | SCREWS | 8 | 1/4"-20 NC X 5/8" LG. SOCKET HD CAP SCREWS
60 | SHEAVE | 1 | 6" D 1020 HR STL. ROUND
61 | BEARING | 2 | FAFNIR #202KL3
62 | BOLT | 1 | 5/8" - 11 NC X 3-1/2" LG. HEX HD BOLT
63 | NUT | 1 | 5/8"-11 NC FIBER LOCK NUT (HEX)
64 | BACKING PLATE | 1 | 1/2" X 8 "X 4" LG. 6061-T6511 ALUM. ALLOY RECT.
65 | BOLT | 2 | 3/8" - 16 NC X 8" LG. HEX HD BOLT GRADE 5
66 | NUT | 2 | 3/8"-16 NC FIBER LOCK NUT
U. S. DEPT. OF AGRICULTURE
FOREST SERVICE
REGION ONE
TRAVELING BLOCK CABLE WAY
DRAWN BY: LASSLA DATE: 8/79
SHEET: 10
LOLO NAT'L. FOREST
REDRAWN: PETERSON DATE: 9/97
OF 11
NEZ PERCE NAT'L. FOREST
56 TAIL BLOCK ASSEMBLY
57
58
59
60
61
62
63
64
65
66

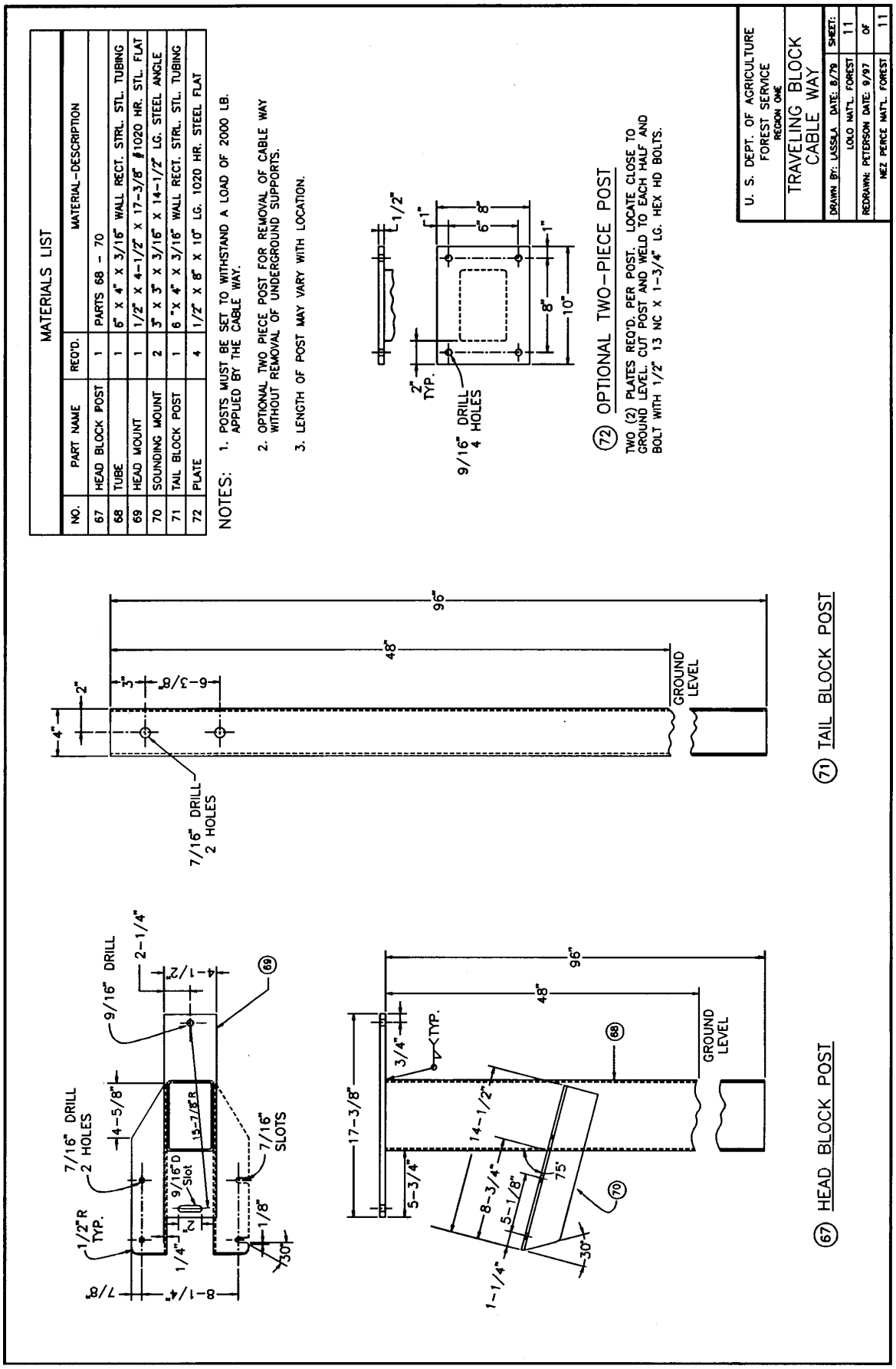
MATERIALS LIST
NO. | PART NAME | REQ'D. | MATERIAL-DESCRIPTION
67 | HEAD BLOCK POST | 1 | PARTS 68 - 70
68 | TUBE | 1 | 6" X 4" X 3/16" WALL RECT. STRL. STL. TUBING
69 | HEAD MOUNT | 1 | 1/2" X 4-1/2" X 17-3/8" #1020 HR. STL. FLAT
70 | SOUNDING MOUNT | 2 | 3" X 3" X 3/16" X 14-1/2" LG. STEEL ANGLE
71 | TAIL BLOCK POST | 1 | 6 "X 4" X 3/16" WALL RECT. STRL. STL. TUBING
72 | PLATE | 4 | 1/2" X 8" X 10" LG. 1020 HR. STEEL FLAT
NOTES:
1. POSTS MUST BE SET TO WITHSTAND A LOAD OF 2000 LB. APPLIED BY THE CABLE WAY.
2. OPTIONAL TWO PIECE POST FOR REMOVAL OF CABLE WAY WITHOUT REMOVAL OF UNDERGROUND SUPPORTS.
3. LENGTH OF POST MAY VARY WITH LOCATION.
(72) OPTIONAL TWO-PIECE POST
TWO (2) PLATES REQ'D. PER POST. LOCATE CLOSE TO GROUND LEVEL. CUT POST AND WELD TO EACH HALF AND BOLT WITH 1/2" 13 NC X 1-3/4" LG. HEX HD BOLTS.
9/16" DRILL 4 HOLES
2" TYP.
1/2"
1"
6"
8"
1"
8"
10"
U. S. DEPT. OF AGRICULTURE
FOREST SERVICE
REGION ONE
TRAVELING BLOCK CABLE WAY
DRAWN BY: LASSLA DATE: 8/79
LOLO NAT'L. FOREST
REDRAWN: PETERSON DATE: 9/97
NEZ PERCE NAT'L. FOREST
SHEET: 11 OF 11
(71) TAIL BLOCK POST
96"
48"
GROUND LEVEL
7/16" DRILL 2 HOLES
6-3/8"
3"
2"
4"
(67) HEAD BLOCK POST
96"
48"
GROUND LEVEL
17-3/8"
3/4"
TYP.
14-1/2"
5-3/4"
8-3/4"
5-1/8"
75°
30°
1-1/4"
(68)
(70)
9/16" DRILL
2-1/4"
4-1/2"
(69)
7/16" DRILL 2 HOLES
4-5/8"
15-7/8"R
7/16" SLOTS
9/16"D Slot
1/2"R TYP.
1/4"
1/8"
30°
7/8"
8-1/4"

Station, Stream Systems Technology Center, 240 West Prospect Road, Fort Collins, CO 80526.

APPENDIX C: USING THE BANK-OPERATED CABLEWAY

SURFACE WATER MONITORING USING THE BANK-OPERATED CABLEWAY

Nez Perce National Forest

Ron Torretta, Jim Paradiso

March 1999

Background

Protocols on the Forest have developed based upon standard documented procedures such as Buchanan and Somers (1969). Additional refinements have been made after consulting with the local U.S. Geological Survey, adjacent National Forests, and the USFS Boise Adjudication Team. Being locally refined, the use of the protocols in this paper may not be appropriate in all situations.

Surface water is monitored at eight locations on the Nez Perce National Forest. Some or all of the following data are collected at each of the monitoring sites: discharge, suspended sediment, turbidity, air and water temperature, conductivity, and bedload.

Procedures used when conducting a cableway measurement include most of the same standard steps used for a wading measurement. Initial setup includes checking the operation of the stage recorder. The beginning time is recorded, as well as stage measurements on the recorder, the staff gage, and inside the stilling well.

Cable measurement periods

Cable measurements are performed whenever the stream or river to be gaged has flows that make gaging via the wading method impossible, impractical, or unsafe. The general rule is to avoid wading in the water any time the product of the velocity (feet per second) and the depth of the water (in feet) is greater than ten.

Discharge

Continuous discharge is recorded at the sites with Stevens A-71 or A-35 recorders mounted on stilling wells. Instantaneous discharge is monitored using standard U.S. Geological Survey (USGS) methods as described in “Techniques of Water-Resource Investigations of the USGS”, Book 3, Chapters A8 and A6. These data are collected by wading measurement during low flows, using either a Price AA or Pygmy current meter. The Price current meter is suspended from a bridge crane or cableway during high flows.

The current meter is tested before and after use for acceptable operation. For the Price AA meter, minimum spin time of 1' 30" is needed in the field. Discharge measurements are recorded on the USGS form #9-275-F, Discharge Measurement Notes, commonly referred to as 'q-notes.' The start and finish times are recorded for discharge, bedload, and suspended sediment measurements. While taking discharge measurements, the time is also recorded every 10 minutes, especially if the water levels appear to be fluctuating. Right Edge Water (REW) or Left Edge Water (LEW), as seen when facing downstream, is recorded on the q-note next to the partial section data. The Distance From Initial Point (DFIP), width, depth, velocity, area, and discharge measurements are recorded and/or calculated the same as for a wading measurement.

The partial sections are measured and then summed for the total discharge, as in a wading measurement. Each partial section should contain no more than 5% of the total flow. The section widths are varied to accomplish this, being narrower in deeper-higher velocity portions of the stream and wider in the shallower-slower portions of the stream. Usually 25–30 total measurements are taken. Measurements are taken beginning at one edge of water and continuing to the other edge.

Set up

During periods of high flows, stations equipped with bank-operated cableways most often use a Price AA current meter suspended one foot above a 75 pound Columbus weight. Due to the high velocities, and resulting erratic movement with subsequent damage to equipment, the use of a 30# C weight (0.5' suspension) is rarely used at these sites. Set up the cable sounding reel assembly with the Columbus weight and Price AA meter suspended. Check the headphones before moving the equipment into position.

Observation depths

Cable measurements on the Nez Perce National Forest are taken in partial sections with depths that commonly range from zero to about five feet deep. Velocity measurements are typically taken at 6/10 of the distance from the water's surface to the stream bottom, but may be taken at the surface, 2/10, or 8/10 depending on circumstances described below.

- *In partial sections less than 1.2 feet deep, velocities are estimated, due to limitations of the meter/weight combination.* Use of the price meter is avoided when the cups cannot be completely submerged. On these shallow sections, the velocity is estimated by visually comparing the movement of the water to a deeper nearby section that is measurable, and recording an 'e' in the observation depth column of the q-note. If that is not possible, a surface velocity is taken with the Price meter (recording an 's' in the observation depth column of the q-note). Measurements taken at the surface are corrected using a 0.87 correction factor.

- *In partial sections between 1.2' and 1.9' deep, the measurement is considered a 0.2 depth observation.* When a 0.2 depth observation is the only measurement in a vertical, a 0.87 correction factor is used to convert the measured velocity to the average for the column. For example, a velocity of 6.84 feet per second (fps) measured at the point is corrected to a velocity of 5.95 fps as the mean in vertical.

- *In partial sections between 2.0' to 2.3' deep, the measurement is recorded as a 0.5 depth observation.* No correction is made, but the notation acknowledges that the measurement is not a true 0.6 depth measurement.

- In partial sections between 2.4' to 5.0' deep, a 0.6 depth observation is taken. No correction is necessary to convert the reading to the mean in the vertical.

- On depths over 5.0 feet, the velocity is measured at both the 0.2 and 0.8 observation points. These two readings are averaged for the mean in vertical.

The hydrographer may find it convenient to summarize the above information on a table to facilitate field use.

Setting the observation depth

The depth of the Price meter is set using the dial indicator on the sounding reel.

- Zero the meter with the bottom of the weight just touching the water's surface. This has been found easier in high velocity water, than zeroing with the meter at the waters surface.

- Lower the equipment to the stream bottom, reading and recording the depth from the dial.

- Raise the equipment to the appropriate depth for the measurement, using the dial on the meter.

Additional corrections to velocity

Suspension angle coefficients to correct for downstream drift are assumed to be 1.0. Cable length is not enough to significantly affect actual stream depth vs. measured depth. Horizontal angle corrections of the water are difficult to determine from a vantage point on a stream bank. This correction is made for water that is not flowing perpendicular to the cross section. The horizontal angle coefficient is assumed to be 1.0 unless the observer can detect a more accurate angle from the observation position.

Suspended sediment

Suspended sediment (SS) samples are collected using the Equal Width Increment (EWI) method. Procedures are similar to those used when conducting SS measurements while wading, and described in Edwards and Glysson (1988).

- All partial sections for sampling have the same width.

- Collect 10 EWI suspended sediment samples for all partial sections with a downstream flow.

- Select an appropriate sized nozzle and establish a transit rate for lowering and raising the sampler to collect 2–4 bottles of SS for analysis. The transit rate must be consistent for all sections and must not allow a bottle to overfill in any one section.

- Use the sounding reel to lower and raise the D79 suspended sediment sampler. Transit rates for depth-integrated suspended-sediment measurements can be calculated using revolutions of the sounding reel. The A-55 reel has a drum circumference of 1 foot and the B-56 reel a circumference of 1.5 feet. Thus, when using a B-56 reel, the handle is turned once each second for a 1.5 fps transit rate.

Air/water temperatures and conductivity measurements are made after the suspended sediment samples are taken, since there is a relationship between water temperature and amount of SS that the water holds. The automatic (ISCO) sampler, if present, should be serviced/changed next and an ISCO calibration sample collected to correlate with the SS samples collected across the stream channel.

Bedload

The bedload sample is also collected using the EWI method. The sounding reel is used to raise and lower the bedload sampler.

- Approximately twenty subsamples are collected. The subsamples are stored for lab analysis as one sample.

- The bedload sampler is positioned on the stream bottom for 60 seconds at each location.

- Record any special circumstances in the notes. Subsamples are taken only in verticals with positive velocities. In places where the sampler cannot be placed on the streambed due to boulders or other obstructions, the subsample may have to be foregone.

Close station

One last record of all stage indicators (outside gage, pulley, inside gage or tapedown, and pen) should be recorded, both on the chart and the Q-notes sheet, before leaving the site. The strip chart should be reset to correct time and gage height before leaving, if necessary. Record any adjustments made on the log and Q-note sheets.

Remove the sounding reel and lock the cable to deter vandalism.

References

Buchanan, Thomas J. and William Somers. 1969. Discharge Measurements At Gaging Stations. Techniques of Water-Resources Investigations. U.S. Geological Survey. Book 3, Chap. A8.

Carter, R.W. and Jacob Davidian. 1968. General Procedures for Gaging Streams. Techniques of Water-Resources Investigations. Book 3, Chap. A6.

Edwards, Thomas K. and Glysson, G. Douglas. 1988. Field Methods For Measurement Of Fluvial Sediment. Techniques of Water-Resources Investigations. U.S. Geological Survey. Book 3, Chap. C2.

USGS Hydrologic Instrumentation Facility. Q-Card for measuring water discharge. Reference Water-Supply Paper 2175.

The Rocky Mountain Research Station develops scientific information and technology to improve management, protection, and use of forests and rangelands. Research is designed to meet the needs of National Forest managers, federal and state agencies, public and private organizations, academic institutions, industry, and individuals.

Studies accelerate solutions to problems involving ecosystems, range, forests, water, recreation, fire, resource inventory, land reclamation, community sustainability, forest engineering technology, multiple use economics, wildlife and fish habitat, and forest insects and diseases. Studies are conducted cooperatively, and applications can be found worldwide.

Research Locations

Flagstaff, Arizona
Fort Collins, Colorado*
Boise, Idaho
Moscow, Idaho
Bozeman, Montana
Missoula, Montana
Lincoln, Nebraska
Reno, Nevada
Albuquerque, New Mexico
Rapid City, South Dakota
Logan, Utah
Ogden, Utah
Provo, Utah
Laramie, Wyoming

* Station Headquarters, 240 West Prospect Road, Fort Collins, CO 80526

The U.S. Department of Agriculture (USDA) prohibits discrimination in all its programs and activities on the basis of race, color, national origin, gender, religion, age, disability, political beliefs, sexual orientation, and marital or familial status. (Not all prohibited bases apply to all programs.) Persons with disabilities who require alternative means for communication of program information (Braille, large print, audiotape, etc.) should contact USDA's TARGET Center at (202) 720-2600 (voice and TDD).

To file a complaint of discrimination, write USDA, Director, Office of Civil Rights, Room 326-W, Whitten Building, 14th and Independence Avenue, SW, Washington, D.C. 20250-9410, or call (202) 720-5964 (voice or TDD). USDA is an equal opportunity provider and employer.

Printed on recycled paper