CUTTHROAT TROUT

EVOLUTIONARY BIOLOGY AND TAXONOMY

Special Publication 36

The Western Division AFS Panel on Cutthroat Trout Taxonomy
Patrick Trotter, Peter Bisson, Luke Schultz, and Brett Roper, editors

A Special Workshop on the Taxonomy and Evolutionary Biology of Cutthroat Trout

PATRICK TROTTER*
Fishery Science Consultant (retired)
4926 26th Avenue South, Seattle, Washington 98108, USA

PETER BISSON
U.S. Forest Service (emeritus), Pacific Northwest Research Station
3625 83rd Avenue SW, Olympia, Washington 95812, USA

BRETT ROPER
U.S. Forest Service, National Stream & Aquatic Ecology Center
860 North 1200 East, Logan, Utah 84321, USA

LUKE SCHULTZ
Wyoming Game and Fish Department
Post Office Box 850, 432 Mill Street, Pinedale, Wyoming 82941, USA

CARL FERRARIS
California Academy of Sciences (retired)
545 NE Floral Place, Portland, Oregon 97232, USA

GERALD R. SMITH
Museum of Zoology, University of Michigan
Ann Arbor, Michigan 48109, USA

RALPH F. STEARLEY
Calvin College
3201 Burton SE, Grand Rapids, Michigan 49546, USA

Abstract.—Cutthroat Trout *Oncorhynchus clarkii* are currently considered a single, widespread species composed of many subspecies following the classification system proposed by Robert J. Behnke in 1979. More recently, molecular genetic and geological evidence has yielded results that are inconsistent with Behnke's classification, which suggests that a re-evaluation of the existing phylogenetic tree is timely. Additionally, several varieties of Cutthroat Trout are either listed under the U.S. Endangered Species Act or are considered to be at risk by the states in which they reside, making it important that the classification and evolutionary relationships among Cutthroat Trout be based on the best available scientific evidence. In 2015, the Western Division of the American Fisheries Society convened a special workshop in which a panel of experts was

* Corresponding author: ptrotter@halcyon.com

asked to weigh carefully evidence on Cutthroat Trout phylogeny and classification, from the oldest published studies to the most recent and answer two questions: (1) does Behnke's 14-subspecies classification remain scientifically tenable and defensible given all available evidence, and (2) if not, what taxonomic classification does satisfy this array of evidence? From new information, the panel concluded that the existing classification system is no longer supported by existing evidence; however, the panel was unable to reach consensus on what a new phylogeny and classification system should be. In the interim, we suggest that the four major evolutionary lineages of Cutthroat Trout be elevated to full species designation and that several uniquely identifiable evolutionary units receive additional investigation to elucidate additional evolutionary structure. This chapter provides the background and context for topics that are covered in the following chapters and suggests fruitful lines of investigation that should help resolve outstanding questions.

Background and Justification for the Special Workshop

The Current Classification of Cutthroat Trout

For almost 40 years now, since its first appearance in a monograph written by the late Robert J. Behnke in 1979, a phylogeny and classification of Cutthroat Trout *Oncorhynchus clarkii* into 14 distinct subspecies has guided the taxonomy and management of this indigenous western North American trout (Behnke 1979, 1988, 1992, 2002; for a catalog of Behnke's 14 subspecies, see Box 1). Behnke based his phylogeny on an evolutionary history and sequence of interior radiations first put forward in several publications by David Starr Jordan (e.g., Jordan 1878, 1894; Jordan and Evermann 1896, 1902; Jordan and Seale 1896). Jordan and colleagues proposed that an ancestral Cutthroat Trout originating in Asia reached North America and dispersed inland through the Columbia River basin. The formation of Shoshone Falls on the Snake River split the ancestral species, isolating the earliest of the interior Cutthroat Trout above the falls, from which they occupied the Lahontan and Bonneville basins and also, via Two Ocean Pass, the Yellowstone River. From the Yellowstone, they reached the Missouri River, distributing upstream to its headwaters and downstream as far as the Platte River, and from there they reached the South Platte and Arkansas rivers. From the headwaters of the Arkansas, in Jordan's view, two east-to-west crossings of the continental divide then occurred, one leading the trout into the Rio Grande drainage and the second into the Colorado River system.

Behnke (1979, 1988, 1992, 2002) adopted some of Jordan's phylogeny but discarded his Yellowstone-to-Missouri colonization route in favor of an upper Columbia-to-upper Missouri colonization with the downstream distribution of Cutthroat Trout stopping well upstream of the mouths of both the Yellowstone and the Platte. He also believed that the Colorado River system was invaded from the Yellowstone, not from the upper Arkansas as Jordan proposed, with west-to-east crossings of the Continental Divide accounting for Cutthroat Trout occupying the Rio Grande, Arkansas, and South Platte systems. Behnke's phylogeny utilized the geological history of western river drainages and the fossil record of salmonid fishes as he understood them at the time, along with available studies of chromosome evolution in salmonids, but relied on meristic character differentiation among the various populations of Cutthroat Trout as his primary method for honing his classification (Behnke 1992). Behnke also

Box 1. The 14 Cutthroat Trout Subpecies Recognized by Behnke (1979, 1988, 1992, 2001)

Coastal Cutthroat Trout *Oncorhynchus clarkii clarkii*. These are the deepest nodes in most molecular phylogenies (i.e., sister to all others). Several traits are plesiomorphic, shared with Rainbow Trout *O mykiss* either via retained plesiomorphies or introgression: vertebral counts, lateral line scale counts, irregular spots, and pyloric caeca. The coloration (Behnke 1988) is silvery to brassy, with a yellowish tint; irregular spots not rounded; lateral line scales 140–180 (120 to 140 in some); 30–40 scale rows above the lateral line; gill rakers 15–21, typically 17–18, short and blunt; pyloric caeca 25–55, mean about 40; vertebrae, 59–64, typically 61–62; spots densely packed, 26–71 spots on head, 322–577 spots on body; basibranchial teeth variable. Distinctive spotting most effectively separates coastal from interior subspecies. Examples of hybrids with Rainbow Trout are known—basibranchial teeth are influenced by hybridization. Only outside the range of influence of Rainbow Trout do Coastal Cutthroat Trout always have basibranchial teeth. Diploid chromosomes 68 (Thorgaard reports 68–70); some unique allozyme characters. Sea-run Coastal Cutthroat Trout migrate to the ocean at the age of 2–3 and at a size of 175 to 225 mm. Maximum age: 10; slow growth after age 3–4 years.

Westslope Cutthroat Trout *Oncorhynchus clarkii lewisi*. The type is from the upper Missouri. This lineage diverged earliest of the inland Cutthroat Trouts; DNA trees document some gene exchanges with neighbors back to mid-Pleistocene. The westslope form, *O. c. lewisi*, is sister to the Lahontan Cutthroat Trout in molecular trees. The colors are variable, generally silvery, with yellowish tints; bright orange-yellow-reds are expressed to greater extent than on coastal or Yellowstone forms (Behnke 1988). The spotting pattern includes small, irregular, nonrounded spots similar in shape and size to Coastal Cutthroat Trout; there are few spots on anterior body below lateral line. The bright coloration has been shown to be at least partly genetic. Westslope Cutthroat Trout have been genetically influenced by millions of Yellowstone Cutthroat Trout *O. c. bouvieri* introductions; these have large, round spots. Vertebrae 59–63, typically 60–61; lateral line scales 150–200, usually 165–180, highest in Salmon and Clearwater River drainages; pyloric caeca 25–50, mean 30–40; gill rakers typically 17–21, means 18–19, posterior gill rakers on first arch absent or weakly developed; some loss of basibranchial teeth. Diploid chromosomes 66. There are substantial allozyme differences between this form and Yellowstone Cutthroat Trout. Allendorf and Leary (1988) proposed that Yellowstone and Westslope Cutthroat trouts be recognized as separate species. Length: 300–400 mm.

Yellowstone Cutthroat Trout *Oncorhynchus clarkii bouvieri*. These familiar trouts are characterized by medium-large, pronounced spots, rounded in outline; like Westslope Cutthroat Trout, the spots are concentrated on the caudal peduncle, except in Yellowstone Lake where spots are distributed evenly over the sides; coloration yellowish-

Box 1 continues

Box 1. Continued

brown, silvery, brassy; bright golden-orange, red, or rose tints may appear on adults; vertebrae 60–63, typically 61–62; lateral scales 150–200, typically 165–180; pyloric caeca 25–50, typically 35–43; gill rakers 17–23, typically 19–20, higher in Yellowstone Lake; there are also more basibranchial teeth in the Yellowstone Lake population, mean 22. Meristics of Yellowstone Cutthroat Trout natives and those of the upper Snake River differ only slightly from typical values of Westslope Cutthroat Trout forms. Weight of 6–7 kg is recorded in Yellowstone Cutthroat Trout. Other reports of 5–10 kg in introduced populations, possibly based on hybrids with Rainbow Trout. Age up to 9 years, length 325 mm. Diploid chromosome number 64, as in all other Cutthroat Trouts except the Coastal and Westslope Cutthroat trouts (Gold et al. 1977).

Snake River Fine-spotted Cutthroat Trout *Oncorhynchus clarkii behnkei*. These have pepper-like spots, the smallest spots of any trout native to western North America. Other traits are like Yellowstone Cutthroat Trout, except for more yellowish colors and orange-red lower fins. Behnke wrote, "Above Shoshone Falls, Yellowstone Cutthroat is native to all the Snake River system except for waters between Jackson Lake and Palisades Reservoir, where the Fine-spotted Snake River Cutthroat Trout exists" (now *Oncorhynchus clarkii behnkei* Montgomery 1996). The distinctions between subspecies break down except for the differences in spotting. Allendorf and Leary (1988) showed that Yellowstone Cutthroat Trout and Fine-spotted Cutthroat Trout are the same at most loci, however, the Fine-Spotted Cutthroat Trout is different in coloration and ecology (Wallace and Zaroban 2013). Both forms have been stocked widely in the upper Snake River (Wallace and Zaroban 2013), impeding efforts to understand the evolution and ecology of trout there. Length to 350 mm.

Lahontan Cutthroat Trout *Oncorhynchus clarkii henshawi*. This polymorphic group is sister to Westslope Cutthroat Trout in many analyses. Trouts in the Lahontan drainage are distinct and diverse, indicating long isolation and evolution among and within populations. It is noteworthy that jawbones of *O. c. henshawi* are like those of the ancient *O. cyniclope*. Three characteristics distinguish Lahontan Cutthroat Trout: (1) they have medium-sized, roundish spots distributed on the sides of the body, top of head, and often on the abdomen; (2) they have the most gill rakers of any Cutthroat Trout, 21–28, averaging 23–26; and (3) they have abundant pyloric caeca, 40–75, typically more than 50. Vertebrae typically 61–63; lateral line scales 150–180. Size: the record from Pyramid Lake, 18.6 kg.; a 28-kg specimen reported. An example of the evolution of Lahontan Cutthroat Trout is in alpine Independence Lake, California, in the Truckee River drainage, where Lahontan Cutthroat Trout have more than 100 basibranchial teeth.

Paiute Cutthroat Trout *Oncorhynchus clarkii seleniris*. Distinguished from Lahontan Cutthroat Trout by the absence of spots on the body.

Box 1 continues

Box 1. Continued

Humboldt Cutthroat Trout *Oncorhynchus clarkii humboldtensis*. Differs from the Lahontan forms by fewer gill rakers, average 21, and fewer (larger) lateral scales (c.f., Trotter 2008). Quinn River Cutthroat Trout have 20–21 gill rakers, typical of Humboldt Cutthroat Trout, but mitochondrial DNA typical for Lahontan Cutthroat Trout.

Alvord Cutthroat Trout *Oncorhynchus clarkii alvordensis*. Have fewer than 50 spots, mainly above lateral line; lower lateral line scale counts; fewer pyloric caeca, 34–49, mean 42; feeble basibranchial teeth, absent in 50%; University of Michigan Museum of Zoology samples are small, only up to 154 mm; 20–26 gill rakers, mean 24; lateral line 126–151, mean 137; scales above lateral line 33–37, mean 35; vertebrae 59–63, mean 62; dorsal fin 9–10; anal fin 9–11; pectoral fin 13–14, pelvic 8–9; branchiostegals 9–11; basibranchial teeth absent in 10 of 19 specimens more than 100 mm in length. Hatchery stocking caused these fish to be significantly introgressed with Rainbow Trout (Rainbow Trout alleles were found in 50%). Pure forms are extinct.

Willow–Whitehorse Cutthroat Trout. These differ from Alvord Cutthroat Trout with fewer gill rakers, 19–23; more lateral line scales, 140–155; more pyloric caeca, 40–58; more basibranchial teeth, 5 or 6 in 95%; vertebrae 59–64. Trotter and Behnke (2008) included these and the native Quinn River Cutthroat Trout with the Humboldt Cutthroat Trout subspecies.

Bonneville Cutthroat Trout *Oncorhynchus clarkii utah*. Includes Bear River and Bear Lake forms. These are similar to Yellowstone Cutthroat Trout; they differ in having larger and more evenly distributed spots on sides and fewer lateral line scales. Lateral Line scales 140–180, average 150–170; pyloric caeca 25–55, mean 35–40 in Bear River, 52 in Bear Lake. The form in Snake Valley has 60–90 basibranchial teeth, mean 20–28. Most others average 5–10 basibranchial teeth. Willow Creek, south of Salt Lake City, averaged 19. Vertebrae: 62–63; gill rakers 16–21, mean 18–19. Three groups have diverged slightly—Bear River and Bear Lake, Snake Valley, and Bonneville; all are related to fossils, at Deweyville and Smith Creek. Bear Lake does not have hybrids, according to Behnke. Otherwise, because of the ancient history of the switching Bear River (Link 2018, this volume) and unfortunate hatchery mixing, many Bonneville Cutthroat Trout cannot be unambiguously separated from Yellowstone Cutthroat Trout.

Colorado River Cutthroat Trout *Oncorhynchus clarkii pleuriticus*. These trouts have high scale counts, 170–205 at least in the north; 38–48 scales above the lateral line; brilliant orange-red and golden coloration, unlike Bonneville and Snake River Cutthroat trouts, but similar to Greenback Cutthroat Trout in these characters. They are probably the source of fossils recovered at the Ziegler Reservoir site. The distribution was formerly as far down the Colorado River as the Santa Clara drainage, including Pine Valley Creek in the Virgin River drainage of Washington County, Utah. They were

Box 1 continues

Box 1. Continued

widespread in the Santa Clara drainage (Spencer Reber, local resident with first-hand knowledge from 1910 to 1920, personal communication). Greenback and Rio Grande Cutthroat trouts are derivatives of the Colorado River Cutthroat Trout via southern headwater stream captures in Colorado (see discussion of Hanson Bluff fossil site).

Greenback Cutthroat Trout *Oncorhynchus clarkii stomias*. These are brilliantly colored like Colorado River Cutthroat Trout; differentiation of these is slight, probably owing to relatively recent gene exchange. This form probably invaded the South Platte River via stream capture from the Colorado River basin. It was thought to have invaded the Arkansas River drainage by a transfer from the South Platte, but the actual historical ranges of Greenback Cutthroat Trout and Yellowfin Cutthroat Trout *O. c. macdonaldi* are under review (Metcalf et al. 2012; Rogers et al. 2018, this volume). Cutthroat Trout are the only native fish common to both drainages. Greenback Cutthroat Trout are similar to Colorado River Cutthroat Trout but with larger spots; lateral line 170–202; and more than 45 above the lateral line; gill rakers 18–21. Size to 1 kg. Greenback Trout from as high 3,200 m in Colorado spawn in July. Plantings of Rainbow Trout from hatcheries have caused the usual research and management problems.

Rio Grande Cutthroat Trout *Oncorhynchus clarkii virginalis*. This form occupies streams in the Santa Fe National Forest on the east flank of the Gila Mountains in New Mexico and southern Colorado. It is light pink and yellow-orange on the sides with irregular spots, mostly posterior; it differs from the Colorado Cutthroat Trout in having lateral line scales 130–180; 35–45 above lateral line; vertebrae 61–62; pyloric caeca 30–50; basibranchial teeth weak, 0–2. Probably related to the fossil trouts in the Hanson Bluff site (Rogers et al. 1985, 1992). Depicted in possibly ancient pictographs in Carizzo Canyon, New Mexico. Reported from the Pecos River by Francisco de Coronado in the Pecos River near Santa Fe, New Mexico in 1541. Formerly ranged as far south as Texas (Garrett and Matlock 1991).

Yellowfin Cutthroat Trout *Oncorhynchus clarkii macdonaldi*. In Twin Lakes, Arkansas drainage, Colorado, extinct. See discussion in Metcalf et al. (2012) and Love Stowell et al. (2018, this volume). The Yellowfin Cutthroat Trout was characterized as silvery-olive, with small, irregularly shaped spots, with a broad lemon-yellow stripe along the sides; the lower fins were bright golden yellow, with no red except the stripe under the lower jaw. It differed from Greenback Cutthroat Trout, with which it was sympatric in Twin Lakes, in more gill rakers, 20–22; fewer lateral line scales, 159–185; and fewer above the lateral line 42–48. Extinction was related to introduction of Rainbow Trout.

believed that later studies using allozyme electrophoresis (Loudenslager and Gall 1980; Leary and Allendorf 1987; Allendorf and Leary 1988), restriction fragment length polymorphism (RFLP) in mitochondrial DNA (mtDNA) (Smith et al. 2002), and microsatellite markers in nuclear DNA (Nielsen and Sage 2002; Peacock and Kirchoff 2004) largely corroborated his

classification when their results were considered along with all other available evidence, although he did not employ those methods himself (Behnke 1992).

Behnke further based his classification on the biological species concept of Mayr (1969), except that he relaxed that concept's prohibition against interbreeding. He recognized from his morphological studies that Cutthroat Trout had diverged into four major evolutionary lines, which he called "major subspecies," that themselves had split in more recent geological time into 10 additional "minor subspecies." Each of his 14 modern subspecies historically occupied either an individual drainage basin, a well-defined portion of one, or a geographically defined cluster of drainage basins that were physically and geologically isolated from one another. As already noted, he utilized distinctive features of appearance, ecology, karyotype differences, and meristic character differences to distinguish among them. He illustrated his phylogeny and the basic elements of his 14-subspecies classification in the qualitative tree diagram that we show in Figure 1. Figure 2 shows the historical distribution of these 14 subspecies on the western North American landscape.

Erosion of Consensus in Behnke's Classification

Beginning in 1995, management agencies charged with making listing decisions and executing recovery actions under the Endangered Species Act (ESA) began lumping certain Cut-

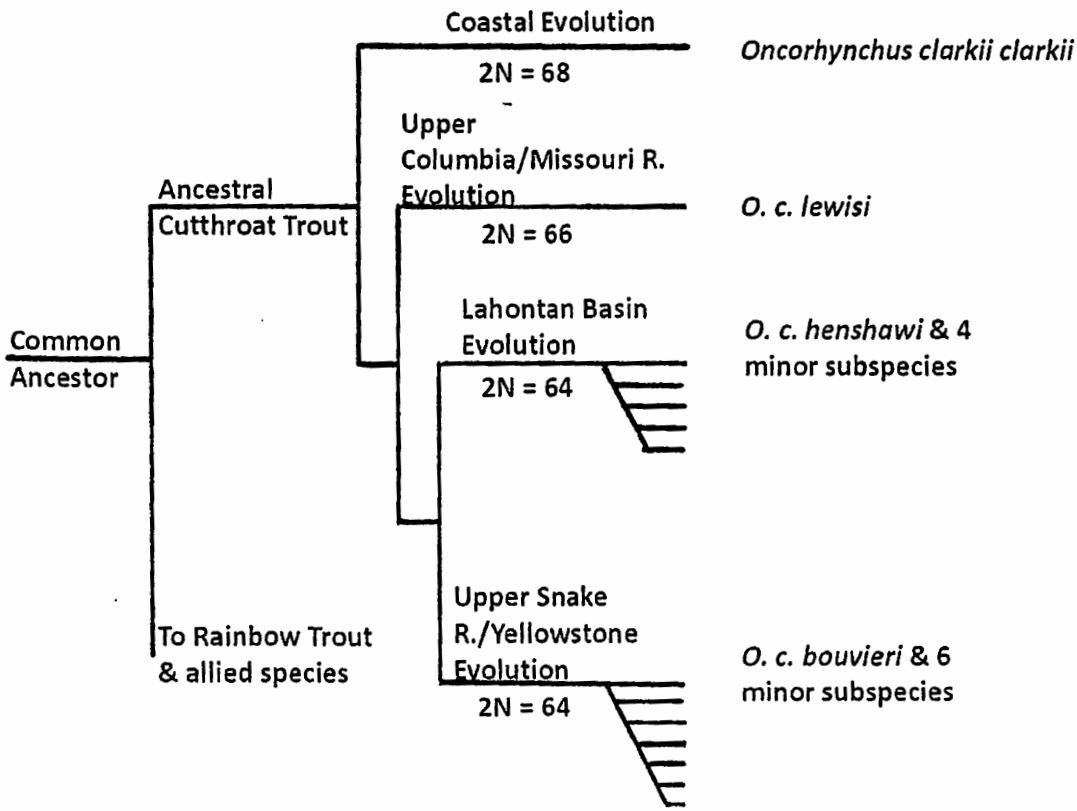

Figure 1.—Behnke's assumed phylogenetic classification of Cutthroat Trout into four major subspecies and 10 minor subspecies (redrawn from Behnke 1988).

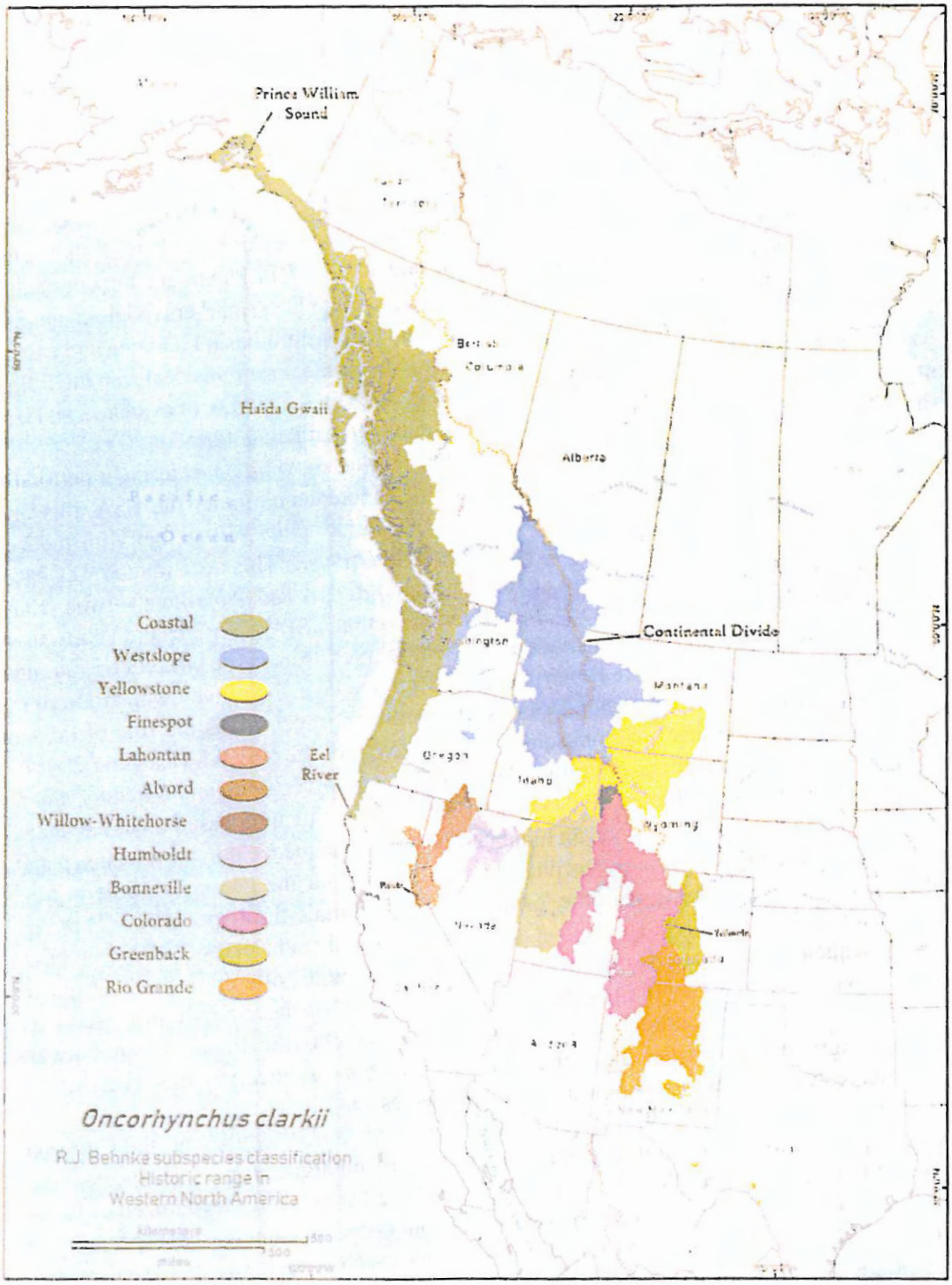

Figure 2.—Historical distribution of Behnke's 14 Cutthroat Trout subspecies.

throat Trout subspecies together, citing population genetic studies primarily using allozyme and mtDNA RFLP methods as their basis for doing so. In that year, the U.S. Fish and Wildlife Service (USFWS) folded three of Behnke's Lahontan Basin subspecies, namely the western-basin Lahontan Cutthroat Trout *Oncorhynchus clarkii henshawi*, the eastern-basin Humboldt Cutthroat Trout *O. c. humboldtensis*, and the unnamed Willow–Whitehorse Cutthroat Trout subspecies (which occupies a separate, contained basin contiguous with the eastern Lahontan Basin) into just one subspecies for management purposes, the ESA-listed Lahontan subspecies, *O. c. henshawi* (Coffin and Cowan 1995). This action ignored the rare and also ESA-listed Paiute Cutthroat Trout *O. c. seleniris*, a western Lahontan Basin subspecies that likewise shows little if any difference from *O. c. henshawi* in allozyme and mtDNA RFLP markers, but does exhibit about the same amount of genetic divergence in microsatellite DNA markers (Nielsen and Sage 2002; Peacock and Kirchoff 2004) as is found between the western-basin Lahontan and eastern-basin Humboldt forms that the agencies did choose to combine. From this decision, the following questions therefore arise: is this lumping justified based on the totality of evidence, and if so, shouldn't it be extended to also include the rare and threatened Paiute form?

In 2001, the USFWS again opted to combine subspecies while considering a petition to list the Yellowstone Cutthroat Trout *O. c. bouvieri* as threatened under the ESA, this time placing the Fine-spotted Snake River Cutthroat Trout *O. c. behnkei* together with the Yellowstone Cutthroat Trout as the single subspecies *O. c. bouvieri*. This decision too was based on a lack of genetic distinction found in allozyme and mtDNA RFLP markers between these two groups (Kaeding 2001). Kaeding (2006) later wrote that USFWS regards the Yellowstone Cutthroat as comprising a single distinct population segment across the entirety of its range, including the Fine-spotted Snake River Cutthroat Trout enclave. Taxonomic validation of the Fine-spotted Snake River Cutthroat Trout as a separate subspecies was the role of taxonomists, geneticists, and other qualified scientists, he wrote, not the USFWS (Kaeding 2006).

More recently, researchers examining levels of genetic divergence and diversity among subspecies have raised additional doubts about Behnke's classification based on newly developed DNA sequence-based methods including mtDNA gene sequence polymorphisms, panels of variable single nucleotide polymorphisms from throughout the genome, whole mitome sequencing, and polymorphisms in the Y chromosomes of male trout specimens. Three papers (Wilson and Turner 2009; Houston et al. 2012; Loxterman and Keeley 2012), each based on DNA sequence comparisons of mitochondrial gene segments, offered revised subspecies classifications of *O. clarkii*. The problem is that while each of these newly proposed classifications showed some congruence with Behnke's original classification, it was not always the same congruence, and where they differed from Behnke's classification, they also differed among themselves as to what the new array of subspecies should be.

Other recent work (Metcalf et al. 2012; Bestgen et al. 2013) focused on the Cutthroat Trout subspecies of the Southern Rocky Mountain region and argues for six subspecies (two extinct) in that region rather than the four subspecies (one extinct) long recognized in Behnke's classification, but with different distributional boundaries in some cases, especially for the ESA-listed Greenback Cutthroat Trout *O. c. stomias*. This work was preceded by two earlier studies (Evans and Shiozawa 2001; Metcalf et al. 2007) that had already cast doubts on the genetic uniqueness of Colorado River Cutthroat Trout *O. c. pleuriticus* and Greenback Cutthroat Trout populations being used in recovery programs at the time. Together, these studies delayed the recovery program for the ESA-listed Greenback Cutthroat Trout.

In another study, Smith et al. (2002) proposed an entirely different evolutionary history and sequence of radiations leading to current Cutthroat Trout distribution and classification. This centered around an inland (Bonneville Basin) origin of Cutthroat Trout much earlier in geological time than Behnke proposed, followed by an outward radiation of the various Cutthroat Trout lineages that spanned the past ~4 million years. Smith et al. (2002) reached their conclusions from their own interpretation of the then-known fossil record coupled with mtDNA RFLP analysis of modern specimens and molecular clock estimates of divergence times. This work suggested yet another way of classifying subspecies, and it challenged Jordan's basic evolutionary and dispersal assumptions that provided the underpinning for Behnke's classification.

Another confounding aspect, although not necessarily aimed at Cutthroat Trout phylogeny, is that scientific thinking now tends to favor an evolutionary species concept over the biological species concept on which Behnke's classification was based (Wiley 1978; Baverstock and Moritz 1990; Mayden and Wood 1995; Mayden 1997), which changes the delimiting criteria for assigning taxonomic rank. We discuss species concepts and their delimiting consequences for Cutthroat Trout later in the chapter.

The erosion of consensus around the validity of currently recognized Cutthroat Trout subspecies has already disrupted the recovery program for one ESA-listed subspecies and could affect recovery programs for others. Calls for clarification have been voiced by individuals responsible for implementing aquatic habitat management and restoration plans for Cutthroat Trout subspecies and for management of Cutthroat Trout fisheries at both federal and state levels. That, and the conviction that the scientific expertise now existed to resolve the issues involved led to the convocation of the Western Division American Fisheries Society (WDAFS) Special Cutthroat Workshop (hereafter, Special Workshop). While the implications of taxonomic decisions to conservation programs can have reciprocal influence on these decisions (Mace 2004), we have tried to dilute the influence of politics in this taxonomic assessment.

The Special Workshop: Objectives, Panel, and Proceedings

Objectives of the Special Workshop

The Special Workshop panel was asked to weigh carefully all evidence available bearing on Cutthroat Trout phylogeny and classification, from the oldest published studies to the most recent, and answer two questions:

1. Does Behnke's 14-subspecies classification remain scientifically tenable and defensible given all available evidence?
2. If not, what taxonomic classification does satisfy this array of evidence?

Composition of the Workshop Panel

The range of evidence that bears on Cutthroat Trout taxonomy and classification encompasses many scientific disciplines: geology, paleontology, phylogeography, osteology, cytology, morphology and meristics, genetics and molecular biology, and scientific nomenclature. One of our first priorities in assembling an expert panel was to secure the participation of the principal authors of the papers referred to above that have mounted recent challenges to the current classification. Next, we invited individuals having considerable expertise in the evidentiary disciplines listed, in particular practitioners of novel methods that have generated relevant past or current taxonomic evidence. By intent and in order to gather fresh insights,

some of our invitations went to individuals who may not have worked with Cutthroat Trout in the past. We capped the panel with an authority on the naming of fishes and the International Code of Zoological Nomenclature (ICZN), who was recommended by the joint American Fisheries Society/American Society of Ichthyologists and Herpetologists Names of Fishes Committee (hereafter, Names of Fishes Committee).

In 2013, the USFWS convened a workshop similar to ours to assess the taxonomic evidence of Metcalf et al. (2012) and others regarding the status and validity of the Greenback Cutthroat Trout and other Southern Rocky Mountain subspecies (see AMEC 2014). Several members of our panel had also participated in that workshop.

Workshop Agenda

The workshop was staged in a two-part format. Part one was a 1-day symposium in which authors of key papers and other members of the select panel presented detailed reviews of the different methods and lines of evidence that early taxonomists through Behnke's time used to develop the classification of Cutthroat Trout subspecies that is currently recognized, as well as the new lines of evidence supporting changes to this classification. Invited presentations on species and subspecies concepts and on ICZN protocols were also delivered. Part two of the Special Workshop consisted of working sessions in which the panelists met as a body to weigh the evidence and form tentative conclusions and then broke into smaller work groups to debate and sort out options for classification.

Workshop Findings and Recommendations

Current Phylogeny and Classification Is No Longer Adequate

With regard to the two tasks set out for the Special Workshop by WDAFS, the panel quickly agreed on the first. It concluded that the current 14-subspecies classification of Cutthroat Trout is not scientifically adequate for several reasons:

1. Scientific thinking tends to favor the evolutionary species concept over the biological species concept on which Behnke's classification was based, which changes the delimiting criteria for assigning taxonomic rank.
2. New fossil evidence reveals that Cutthroat Trout were present in the then-forming Lahontan basin 10 million years ago, much earlier in geological time than previously believed. These findings, coupled with what we now know about drainage patterns in western rivers over that same time period, opens the possibility of a completely different set of interior radiation and colonization pathways than any of the earlier taxonomists, including Behnke, realized.
3. Newly available advanced methods of molecular phylogenetics based on accurate, high-throughput DNA sequence data are revealing greater differentiation and diversity in Cutthroat Trout than previously used methods were able to detect.
4. Major and minor subspecies designations used by Behnke are at odds with ICZN naming protocols and should be rectified.

The second task—to offer a taxonomic reassessment and classification that is consistent with the current array of available evidence—proved much more difficult. This required not only a deeper analysis of the data, but also a careful consideration of associated factors that

extended well past the 2-day workshop period. Among these were how to apply the different concepts of species and subspecies to Cutthroat Trout. The panel devoted some of its most intense energy to species concepts and subspecies, especially the meaning, utility, and value of the term "subspecies" as a taxonomic rank.

Species Concepts

Depending on how they are tallied, there are now anywhere from 22 to 26 different species concepts published in the peer-reviewed literature (Mayden and Wood 1995; Mayden 1997; Wilkins 2009). Because each species concept comes with a somewhat different set of delimiting criteria, what may be recognized as a species and what may not can depend critically upon which species concept is employed. At the 2015 workshop session, the panel rejected the biological species concept as employed by Behnke (1979, 1988) in favor of the evolutionary species concept of Simpson (1961; see also Wiley 1978; Baverstock and Moritz 1990; Mayden and Wood 1995; Mayden 1997) as being more reflective of speciation as an evolutionary process and therefore more useful for weighing and interpreting the array of evidence now available for Cutthroat Trout, especially considering the newer molecular systematics evidence. A species, as defined in the evolutionary species concept, is "a single lineage of ancestor-descendant populations which maintains its identity from other such lineages and which has its own evolutionary tendencies and historical fate" (Wiley 1978).

Continuing discussions of species concepts among panelists following the workshop led the panel to adopt an even more recent (and more inclusive) evolutionary process-based concept, the unified species concept of de Queiroz (2007), for use in its subsequent delimiting work. The definition of species in this concept is "a separately evolving metapopulation lineage" in which "lineage refers to an ancestor-descendent series...through time" and "metapopulation refers to an inclusive population made up of connected subpopulations" (de Queiroz 2007). De Queiroz (2007), Naomi (2010), Carstens et al. (2013), and Love Stowell et al. (2018, this volume) have additional details that explain the unified species concept more fully, including its criteria and how to employ them for delimiting the taxonomic rank of an entity.

The Question of Subspecies

On the subspecies question, the panel split evenly at the 2015 workshop on whether or not this term has value and should be employed as a taxonomic rank, and that impasse continues. Those on the panel opposed to using the term point out that subspecies as a category in Linnaean taxonomy has not always aligned with real evolutionary entities. Instead, in the words of one panelist, "The subspecies that have been described are merely sinks for storage of information about local diversity." As early as 1942, subspecies were thought of more in the sense of geographical races (Mayr 1942) or, as Mayr wrote later, as "a practical, nonphylogenetic category, simply used to designate geographical races of a species" (Mayr 1969). In following Mayr's biological species concept, Behnke (1979, 1988) acknowledged using the term in just this way in his phylogeny and classification "by dividing a highly variable, widely distributed species into smaller units, in the case of Cutthroat Trout, associated with particular drainage basins or particular geographical areas."

Panelists favoring retention and use of the subspecies rank point out that disregarding the data on which subspecies are based ignores important evolutionary and ecological information intrinsic to these units that should be recognized if the full range of biodiversity within

the species is to be preserved (i.e., the value of making such designations lies in the potential for biodiversity conservation; Behnke 1979, 1988). "This does not mean that we need to accept the category as 'fundamental' or argue about their individual delimitations," wrote one pro-subspecies panelist, "but I think morphology is going to be useful in choosing evolutionary-ecological units and making recommendations for their conservation. Many subspecies names in *O. clarkii* point to real biological entities that are threatened."

The validity, value, and utility of subspecies as a taxonomic rank within species has been controversial for almost as long as the term has existed (Wilson and Brown 1953). Despite this, both the ICZN (1999) and the Names of Fishes Committee (Page et al. 2013) continue to recognize subspecies as a taxonomic rank. However, even though the Names of Fishes Committee permits and recognizes the assignment of trinomial scientific names for subspecies, it also urges that they be used sparingly in journal papers, books, and other publications in favor of a standardized set of common names (Page et al. 2013). We address this again later in the chapter.

Uniquely Identifiable Evolutionary Units

Despite the all-inclusive delimiting criteria of the unified species concept (de Queiroz 2007; Love Stowell et al. 2018), the majority of panelists felt that there was still a need to recognize subunits that have diverged (or are diverging) from entities delimited as species (i.e., populations that available evidence indicates have embarked on their own independent evolutionary paths but are not far enough along those paths to be considered full species themselves; they meet some but not all of the species-delimiting criteria). Given the impasse over using the term subspecies, the panelists opted to coin their own term to describe these entities: the uniquely identifiable evolutionary unit (UIEU). The intent here was not to add to the existing terminology given to forms with some level of distinct evolutionary uniqueness, but to come up with a term the panelists themselves could all agree on for acknowledging, describing, and discussing these entities that would enable them to move on to the issues of phylogeny and classification.

A Revised Phylogeny and Classification of Cutthroat trout

Four Major Evolutionary Lineages...Four Full Species

As a first step in offering a revised phylogeny and classification of Cutthroat Trout that better matches the available evidence, the panel concluded that this evidence does continue to support Behnke's earlier finding that modern Cutthroat Trout (i.e., those present on the landscape today plus those that were present historically but are now extinct) arose from four major evolutionary lineages: the coastal, the Lahontan Basin, the upper Columbia/Missouri River, and the upper Snake River/Yellowstone evolutionary lineages. However, the panel's proposed phylogeny differs from Behnke's in several important respects.

In Behnke's phylogeny, as explained earlier and illustrated in Figure 1, the coastal and Snake River/Yellowstone lines represent the initial divergence of the ancestral Cutthroat Trout lineage and are surviving sister lineages, with the westslope and Lahontan Basin lineages then diverging from the Snake River/Yellowstone lineage. The panel's phylogeny, on the other hand, acknowledges the ~10 million years before present (Ma) presence of Cutthroat Trout in the Lahontan Basin (Stearley and Smith 2016; Smith and Stearley 2018, this volume) and proposed that the coastal lineage was the initial divergence from this ancestral lineage. The panel interpreted the available evidence as indicating that both the upper Snake River/Yellowstone

lineage (Behnke's Yellowstone Cutthroat Trout) and the upper Columbia/Missouri River lineage (Behnke's Westslope Cutthroat Trout) also diverged from the Lahontan Basin lineage more recently in geological time. The earliest Cutthroat Trout of the upper Snake River/Yellowstone evolutionary lineage likely gained access to that drainage from the Lahontan Basin via drainage connections linking the Lahontan Basin with the paleo upper Snake River drainage that had opened by ~9 Ma (Wallace 2003; Wallace et al. 2008; Link and Keeley 2018, this volume). Dispersal and initiation of divergence of the interior forms of Cutthroat Trout may have begun with the opening of these drainage connections, even though genetic evidence suggests that gene exchange between the Lahontan Basin and upper Snake River/Yellowstone lineages persisted until much more recently, ~3.07 Ma (Shiozawa et al. 2018, this volume; see also Arnold 2007).

As a second step in offering a revised phylogeny and classification, the panel proposed to elevate Behnke's four major subspecies to four distinct species, consistent with the delimiting criteria of the unified species concept (see Markle 2018, this volume). This proposal, if carried forward, would redefine Cutthroat Trout as a complex of four species rather than just a single species. The essential features of this phylogenetic hypothesis are illustrated in the qualitative tree diagram shown in Figure 3.

A brand new analysis of Cutthroat Trout phylogenetics based on 8,057 base pairs of mtDNA that was not available to the panel at the time of its 2015 workshop and is published here for the first time (Shiozawa et al. 2018) lends quantitative support for the panel's phylogeny on the one hand, but offers an alternative interpretation of the evolutionary pathways of the four major phylogenetic lineages on the other. Shiozawa et al's (2018) Figure 6, redrawn here as Figure 4, illustrate high maximum likelihood bootstrap and high Bayesian posterior probability support for the same four major evolutionary lineages as the panel hypothesized qualitatively in Figure 3. But a fossil-calibrated maximum clade credibility tree for the family Salmonidae generated by the program BEAST (Drummond et al. 2012) with molecular clock estimates of the times since the last exchange of genes among evolutionary lineages in these fishes suggests a somewhat different picture of the divergence of the four major Cutthroat Trout lineages than the panel hypothesized. The complete family Salmonidae tree is shown in Figure 12 of Shiowaza et al. (2018, this voume); the Cutthroat Trout portion of this tree is reproduced here as Figure 5.

In this interpretation, the initial split of the ancestral Lahontan Basin line at ~3.07 Ma yielded two lineages: (1) the original Lahontan Basin lineage from which the coastal lineage diverged at ~2.66 Ma and the westslope lineage diverged at ~2.17 Ma, and (2) a sister interior Cutthroat Trout lineage that would itself split into sister lineages at ~2.15 Ma, one of which is the upper Snake River–Yellowstone lineage and the other a lineage that at ~1.74 Ma would split into the Bonneville Cutthroat Trout *O. c. utah* and the Colorado River Cutthroat Trout *O. c. pleuriticus* (blue lineage, Rogers et al. 2018, this volume). The Bonneville Cutthroat Trout would also split in this interpretation to yield the green lineage Colorado River Cutthroat Trout of Roger et al. (2018) and the other Southern Rocky Mountain subspecies.

One panelist, a strong proponent of the unified species concept, had argued that a rigorous application of its delimiting criteria to the new phylogenetic tree (Figures 3 and 4; Figure 12 in Shiozawa et al. 2018) would lead to even more full Cutthroat Trout species than the four being proposed by the panel. The fossil-calibrated tree (Figure 5) could be interpreted as supporting this. Another panelist, echoing that sentiment, wrote, "My sense is that there are several more taxa and excellent grounds for justifying them, so it would be a pity to miss the opportunity to do so." However, that must be left for future work to address.

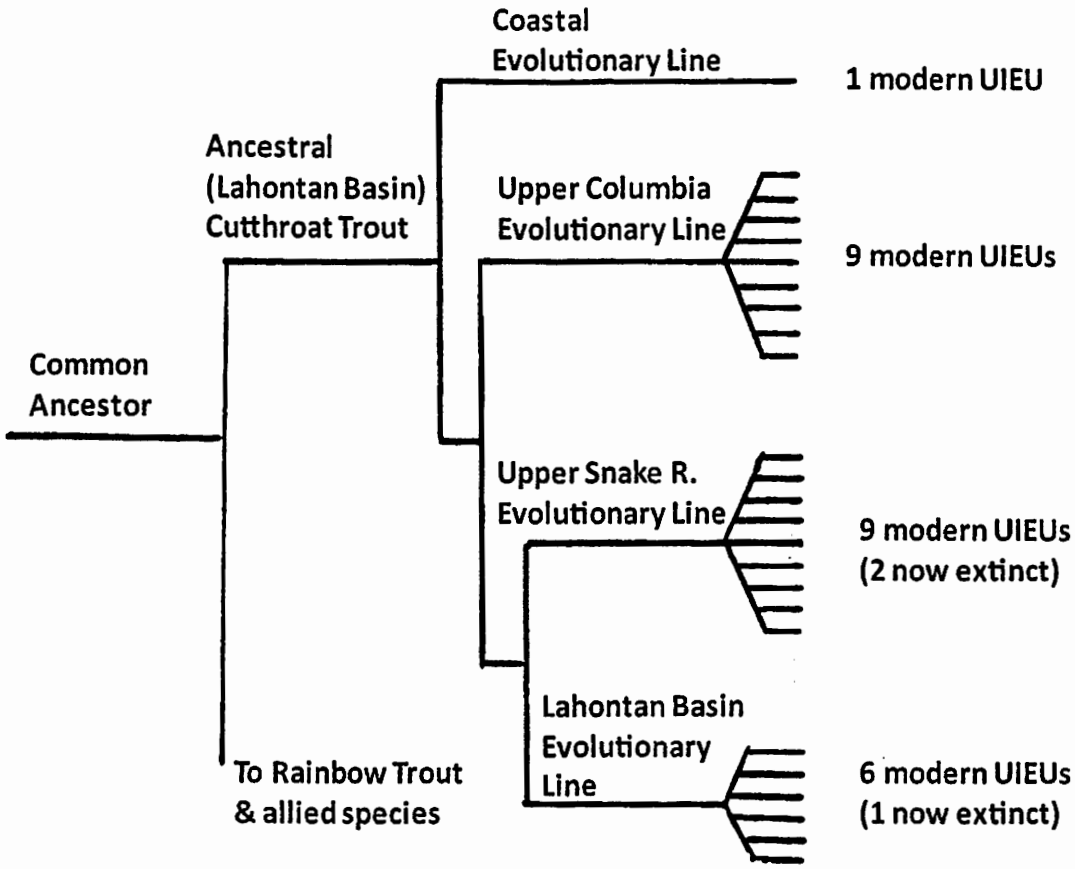

Figure 3.—The Special Workshop panel's assumed phylogenetic classification of Cutthroat Trout. UIEU = uniquely identifiable evolutionary unit.

...Or a Single Species with Four Major Branches?

As the implications of recognizing four distinct species of Cutthroat Trout became more apparent, a minority of the panel expressed opposition to doing so, either because they deemed it premature at this time owing to a lack of sufficient systematic research or because they feared doing so would only generate even more confusion and disruption of recovery and conservation programs than existed when the Special Workshop was conceived. A statement from one panelist captures both opposing arguments:

> There is a lot of systematic research waiting to be done before the taxonomic system can be stable. Broad genomic data are appearing that will soon make the problem tractable. Premature name changes will throw taxonomy into confusion... We currently have abundant information with which to identify evolutionarily significant units and conservation units, which are the critical goals. Changing species names without sufficient evidence can only lead to confusion and conservation weakness—just the opposite of what the WDAFS was hoping to achieve with this Special Workshop.

This view would retain Behnke's four major subspecies as simply separate major branches of the one species *O. clarkii*, with only their phylogenetic relationships to one another changing

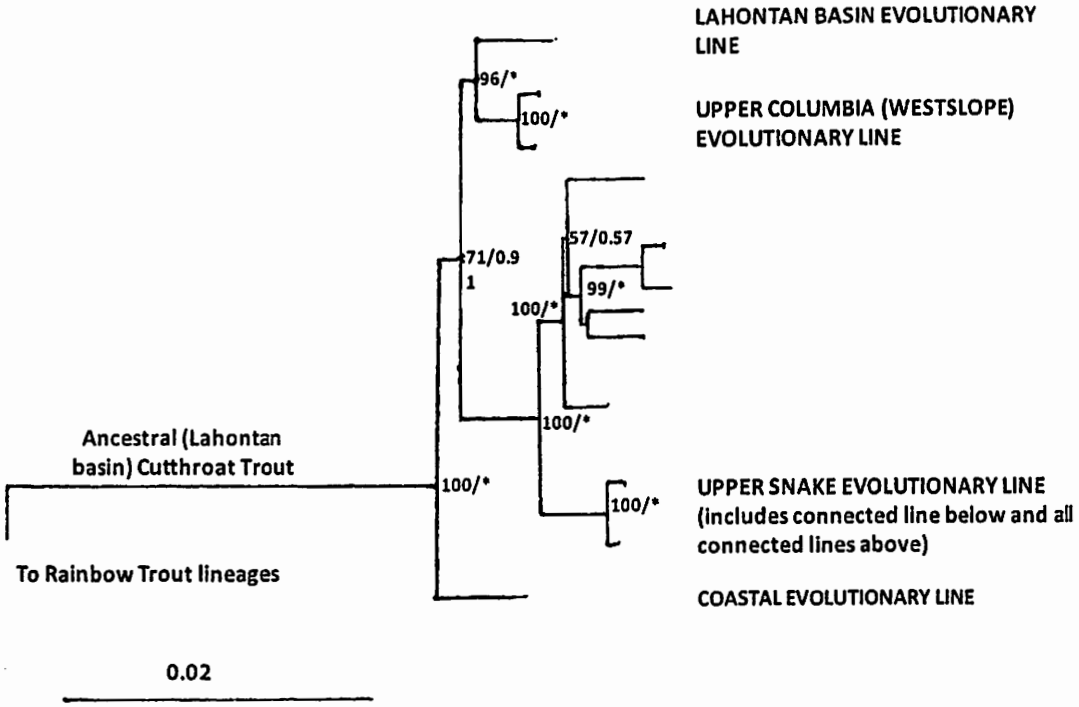

Figure 4.—Phylogenetic relationships of major Cutthroat Trout evolutionary lineages based on 8,057 base pairs of mitochondrial DNA, redrawn from Figure 13 in Shiozawa et al. (2018). Redrawn by rotating the sister lineages diverging at the 71/0.91 and 96/* nodes around their respective nodes. This produces a tree equivalent to that drawn in Figure 13 from Shiozawa et al. (2018) but positions those lineages in a way that aligns with the panel's qualitative tree shown in Figure 2 and better illustrates the congruence of those two figures. Rotating the divergence lines around the initial 100/* node would have highlighted this congruence even more by placing the coastal evolutionary line at the top of the tree and the Lahontan Basin line at the bottom, as shown in Figure 2. Since we are dealing only with major evolutionary lineages here, we omitted several clusters of finer-scale divergences shown without either bootstrap support or Bayesian posterior probability values on the right-hand side of Figure 13 from Shiozawa et al. (2018). At the divergence nodes with values, the first number is its maximum likelihood bootstrap support value and the number following the slash mark is its Bayesian posterior probability. An asterisk rather than a second number signifies a Bayesian posterior probability greater than 0.98. Horizontal distances along the tree are scaled to an average number of nucleotide replacements per site of 0.02, as shown on the scale bar beneath the tree.

from Behnke's version (Figure 1) to either the panel's version (Figure 3) or that suggested by Shiozawa et al. (2018; see Figures 4 and 5).

That prompted two rebuttals from majority panelists, one of whom wrote, "There are a lot of ways of conceptualizing and delimiting species. Some are better than others. We provided a quote from the literature that highlighted the value of species conceptualization: 'It is good practice to define some species concept when reporting investigation that includes a substantial species delimitation component, if only because this articulation enforces the need for a clear argument regarding the criteria used to recognize species (Carstens et al.

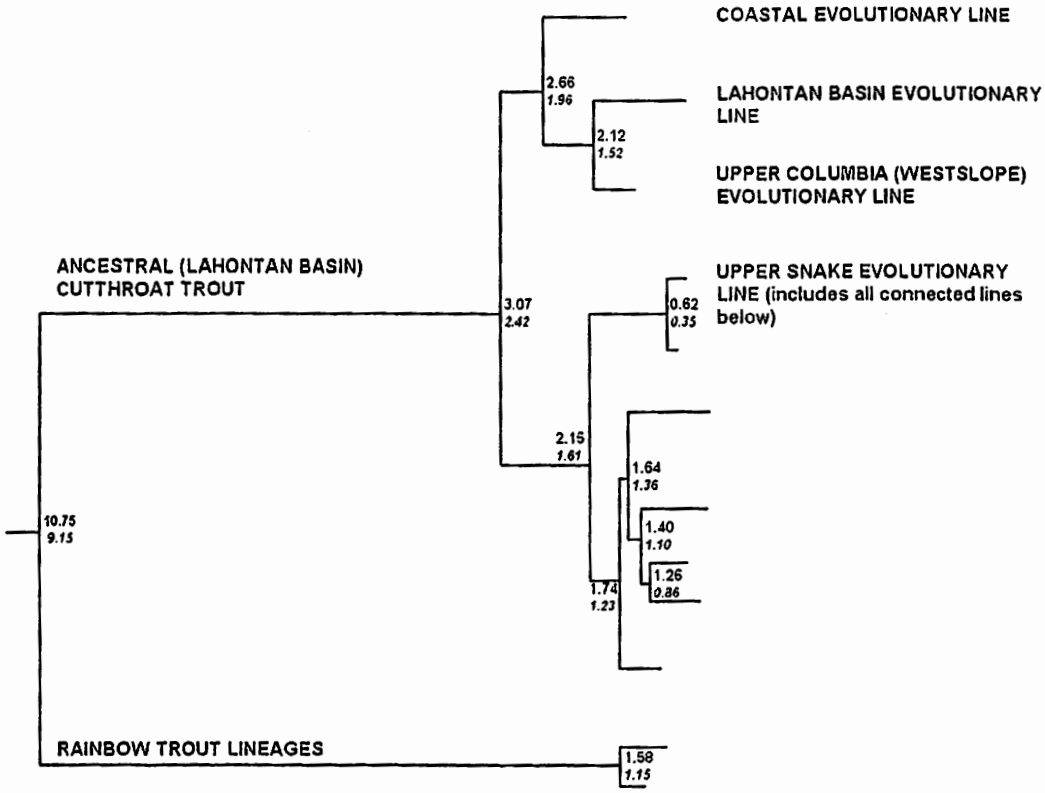

Figure 5.—Time-calibrated maximum clade credibility tree of Cutthroat Trout from the program BEAST, redrawn from Figure 12 in Shiozawa et al. (2018). Redrawn in this case by including only the Cutthroat Trout portion of the full Salmonidae family tree shown in Figure 12 from Shiozawa et al. (2018) and by rotating lineages around the divergence node labeled 3.07, 2.42. The top bold number at a divergence node is the average divergence time (Ma) based on fossil calibration. The second italicized number is the average divergence time based on a divergence rate of 1% per Ma.

2013).' So, it strikes me that we would need another model of species conceptualization and delimitation [rather than the de Queiroz (2007) model the panel agreed on] included in the book." No alternative species concept was provided by the minority panelists, but because their proposal echoes Behnke's original classification, the biological species concept of Mayr (1969), which was rejected by the panel early in its deliberation, is the likely alternative position.

The second rebuttal comment was more direct: "If for no other reason than to align Cutthroat Trout taxonomy with other western fishes, I think moving away from the current taxonomy is useful and timely."

Modern Cutthroat Trout Uniquely Identifiable Evolutionary Units

Regardless of how we choose to recognize and name the four major evolutionary lineages, as full species or as major branches of a single species, the panel agreed that available evidence supports a list of 25 UIEUs that have emerged within these lineages (Campbell et al. 2018;

Peacock et al. 2018; Rogers et al. 2018; Williams et al. 2018; Young et al. 2018; all this volume: for a map of their historical distribution, see Figure 6):

- One such unit in the coastal evolutionary lineage (Williams et al. 2018).
- Six UIEUs in the Lahontan Basin evolutionary lineage (Peacock et al. 2018).
- Nine UIEUs in the upper Columbia–Missouri River, or westslope, evolutionary lineage (Young et al. 2018).
- And nine UIEUs in the upper Snake River–Yellowstone evolutionary lineage (Campbell et al. 2018; Rogers et al. 2018).

The Coastal Cutthroat Evolutionary Lineage

Shown on the top of Figure 3, the evolutionary lineage leading to the modern Coastal Cutthroat Trout has evidently remained unbranched over evolutionary time (Behnke 1979, 1988, 1992, 2002; Williams et al. 2018) and has been termed "the Cutthroat Trout basal lineage" (c.f. Wilson and Turner 2009).

The Lahontan Basin Evolutionary Lineage and Its Uniquely Identifiable Evolutionary Units

At the bottom of Figure 3 is the sister to the Coastal Cutthroat Trout lineage in the panel's phylogeny, recognized as the Lahontan Basin evolutionary lineage owing to the demonstrably long presence of Cutthroat Trout in the Lahontan Basin and the probability that the earliest Cutthroat Trout of the upper Snake River/Yellowstone evolutionary lineage likely gained access to those drainages from the Lahontan Basin, not from the Columbia River as Jordan and Behnke had proposed.

The uniqueness of all five of the Lahontan Basin subunits Behnke originally recognized as subspecies in his evolutionary lineage, plus one additional UIEU he did not recognize, are supported by the recent molecular evidence (Saglam et al. 2017; Peacock et al. 2018; S. Amish, University of Montana, and coauthors, paper presented at the American Fisheries Society annual meeting, 2015). These include (1) Paiute Cutthroat Trout (subspecies *seleniris* in the Behnke phylogeny), (2) Western Lahontan Basin Cutthroat Trout (subspecies *henshawi* in the Behnke phylogeny), (3) Eastern Lahontan Basin Cutthroat Trout (subspecies *humboldtensis*, the Humboldt Cutthroat Trout of Trotter and Behnke [2008]), (4) Coyote Basin Cutthroat Trout (formerly Willow–Whitehorse Cutthroat Trout), and (5) extinct Alvord Basin Cutthroat Trout (subspecies *alvordensis* in the Behnke phylogeny). Uniquely identifiable evolutionary units (3) and (4) are currently combined with the western Lahontan Basin UIEU (2) as the subspecies *henshawi* in the federal ESA recovery plan. The sixth UIEU supported as uniquely identifiable by the methods of advanced DNA sequence-based phylogenetics is the Northeastern Lahontan Basin Cutthroat Trout of the Quinn River drainage, which presently inhabits only a handful of remote tributaries within that system. Trotter and Behnke (2008) had earlier included both the Quinn River and Coyote Basin Cutthroat trouts with the Humboldt Cutthroat Trout in the subspecies *humboldtensis*.

The Upper Snake River/Yellowstone Evolutionary Lineage and Its Uniquely Identifiable Evolutionary Units

In addition to the divergence of the coastal evolutionary lineage, the Lahontan Basin evolutionary lineage exhibits two additional early branch points in the panel's phylogeny. The

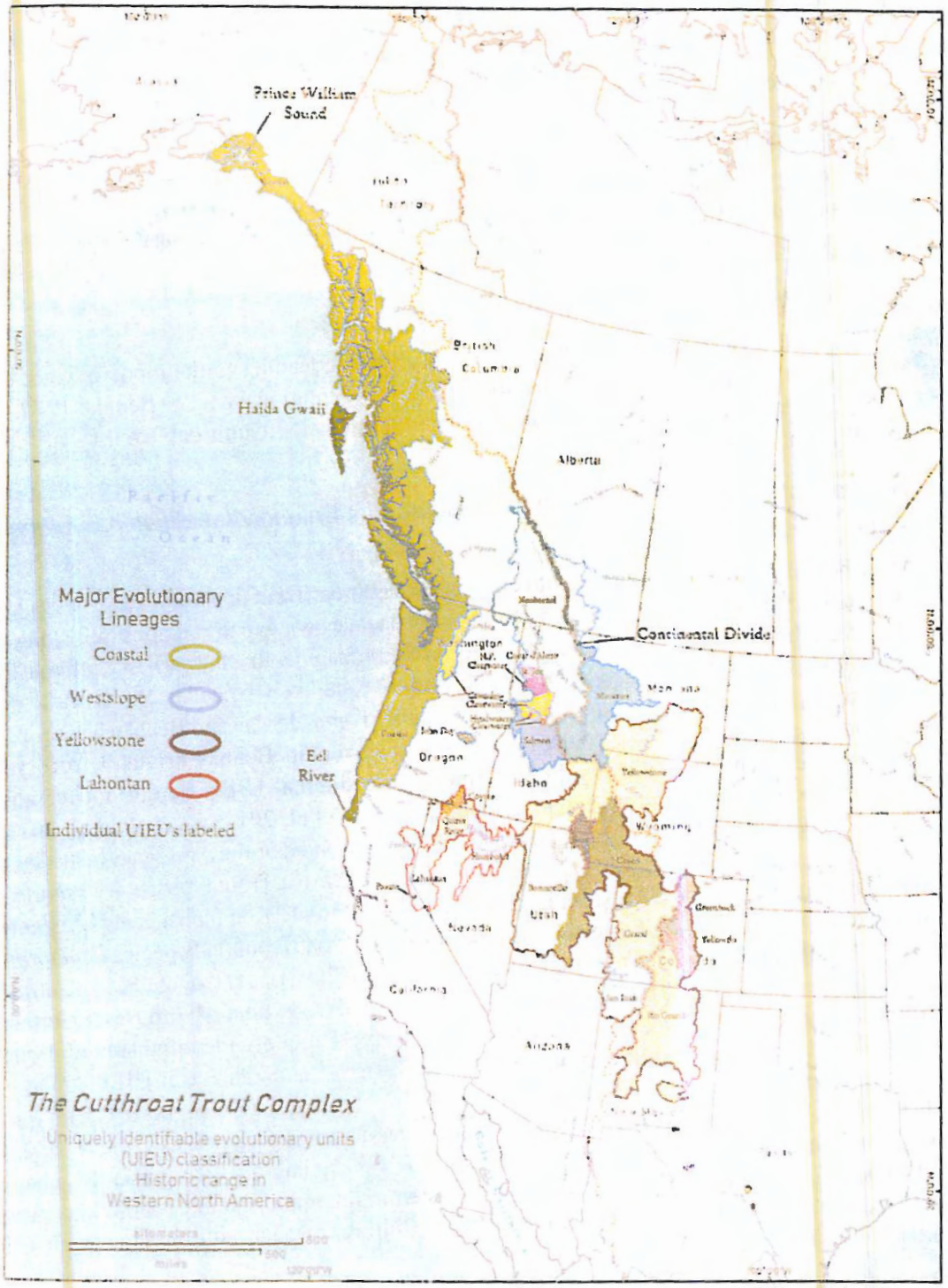

Figure 6.—Historical distribution of the four majority-proposed Cutthroat Trout species and 25 uniquely identifiable evolutionary units.

first of these is the upper Snake River/Yellowstone evolutionary lineage. The fishes of this evolutionary lineage, along with the fishes of the upper Columbia/Missouri (westslope) evolutionary lineage, have spread into more western drainage basins and differentiated into more distinctly identifiable subunits than any of the other Cutthroat Trout lineages, with nine UIEUs identified to date in each branch. In the upper Snake River/Yellowstone evolutionary lineage, panelists recognized nine UIEUs that included an upper Snake/Yellowstone UIEU, a Bear River UIEU, and a Bonneville Basin UIEU (Campbell et al. 2018) plus six distinct Southern Rocky Mountain UIEUs recognized by the 2013 USFWS workshop (Rogers et al. 2018). The evolutionary distinctiveness and standing of the Fine-spotted Snake River Cutthroat Trout (*O. c. behnkei* in the Behnke phylogeny) is not supported by the molecular evidence and our panel does not recognize it as a distinct UIEU, even though it does differ markedly in ecology and in spotting appearance from other upper Snake/Yellowstone populations.

Toline et al. (1999) and Smith et al. (2002) reported that Cutthroat Trout in the Bear River basin appear to share a more recent common ancestor with Yellowstone Cutthroat Trout than with Bonneville Cutthroat Trout in the central and southern portions of their range in Utah, which speaks to the timing of two of the divergences of the upper Snake evolutionary lineage, one (perhaps the first) leading to the modern Bonneville UIEU and the other leading to the modern Bear River UIEU. In addition, mtDNA sequence data support a genetic affinity of the Bonneville UIEU with Cutthroat Trout in the Colorado River and adjacent watersheds (Loxterman and Keeley 2012), which hints at another dispersal pathway for trout of the upper Snake evolutionary lineage to access the Green–Colorado River system and Southern Rocky Mountain drainages. Behnke and other taxonomists recognized a dispersal pathway from the upper Snake River to the upper Green and Colorado rivers (Behnke 1979, 1988; Link and Keeley 2018). A dispersal pathway between the upper Snake to the Columbia through the western Snake River Plain is contrary to geological and fossil evidence (Stearley and Smith 2016; Link and Keeley 2018).

Regarding the Southern Rocky Mountain UIEUs, studies reviewed by the 2013 USFWS panel showed that earlier methods had misidentified some phylogenetic associations (AMEC 2014), and there are actually six uniquely identifiable Cutthroat Trout clades in this region (Metcalf et al. 2012; Rogers 2012; Bestgen et al. 2013; Rogers et al. 2014), where Behnke and other earlier taxonomists had recognized only four. The Colorado River Cutthroat Trout *O. c. pleuriticus* was shown to contain two distinct clades (UIEUs) referred to in publications as the blue lineage and green lineage, respectively (Rogers 2012; Bestgen et al. 2013; Rogers et al. 2014, 2018), but here identified by the suggested common names Green River Cutthroat Trout (blue lineage, native to the upper White, upper Yampa, and upper Green rivers) and Colorado River Cutthroat Trout (green lineage, native to the Dolores, Gunnison, and upper Colorado rivers; Grand River Cutthroat Trout is another proposed common name recently proposed for this clade). The other distinct clades (UIEUs) recognized in this body of work are the Greenback Cutthroat Trout native to the South Platte River drainage, the Yellowfin Cutthroat Trout (extinct) native to the Arkansas River drainage, the San Juan Cutthroat Trout native to the San Juan River drainage (also extinct), and the Rio Grande Cutthroat Trout native to the Rio Grande and upper Pecos and upper Canadian rivers (Rogers et al. 2018). It was also shown in this work that the holotype specimen for the Greenback Cutthroat Trout O. c. stomias is actually a specimen of the Rio Grande Cutthroat Trout *O. c. virginalis* (Rogers 2012; Rogers

et al. 2018), which will necessitate a formal re-description of the UIEU currently called *O. c. stomias*, as noted elsewhere in this chapter.

The Upper Columbia/Missouri River (Westslope) Evolutionary Lineage and Its UIEUs

The second major divergence from the Lahontan Basin evolutionary lineage in the panel's proposed phylogeny resulted in the upper Columbia/Missouri River evolutionary lineage. This corresponds to the Westslope Cutthroat Trout lineage in the Behnke phylogeny, which led to just a single modern subspecies, O. c. lewisi. Although Young et al. (2018) retain the Westslope Cutthroat Trout common name designation for this major lineage, their recent studies using DNA sequence-based markers indicate that this line has differentiated into nine UIEUs that they have labeled primarily by river basin: (1) John Day; (2) Coeur d'Alene; (3) St. Joe; (4) North Fork Clearwater; (5) Salmon; (6) Clearwater Headwaters; (7) Clearwater–Eastern Cascades; (8) Neoboreal, consisting of most of the Columbia River upstream from its separation from the Snake River, the Fraser River in British Columbia, and the South Saskatchewan River in Alberta; and (9) Missouri River. The broad distributional pattern indicates divergence prior to capture of the upper Snake River by the Columbia River through Hells Canyon, ~3 Ma, and prior to glaciation (Smith et al. 2000; Stearley and Smith 2016).

As discussed more thoroughly in Young et al. (2018), the phylogeographic structure of this major evolutionary lineage is consistent with isolation in unglaciated basins serving as refugia during glacial cycles, followed by extensive dispersal from some of those refugia during interglacial intervals. The oldest divergence among these UIEUs involves fish in river basins south of the maximum advance of Pleistocene ice. One of these, the John Day River UIEU, although now only a relict population inhabiting tributaries of the upper John Day River, Oregon, exhibits the greatest divergence from all of the other upper Columbia/Missouri River Cutthroat Trout UIEUs. Much lower levels of divergence characterize UIEUs in areas occupied by Pleistocene ice sheets and the glacial lakes that were formed along the ice margins (Young et al. 2018).

Cutthroat Trout Scientific and Common Names

An essential part of Cutthroat Trout classification is the assignment of correct scientific names to each of the valid taxonomic units. The naming process is one of the final steps in systematic revision and can only start after taxonomists have completed their decisions about how populations are grouped together and which of those groups should be treated as distinct units. The naming process is independent of the employed species concept or the nature of data collected from sampled populations. It is neither affected by the taxonomic level (species, subspecies, and, in some cases, variety) at which the name was initially used nor by relationships to other forms as hypothesized in the original description. The correct name is typically the oldest name that was validly published in accordance with ICZN protocols for any of the populations that are included within the taxonomic unit (ICZN 1999). Problems arising from difficulties in determining whether a name was validly proposed, to which population(s) that name belongs, or which name is the oldest sometimes complicate the assignment of a name. This problem recently occurred regarding the Greenback Cutthroat Trout *O. c. stomias* of Colorado. Recent DNA sequence comparisons reveal that the type specimen for which this name was originally published and was, supposedly (but evidently erroneously), collected from the South Platte River drainage is actually a Rio Grande Cutthroat Trout (Rogers 2012;

Rogers et al. 2018) for which the subspecies name *virginalis* was earlier published for a different type specimen known to have been collected from the Rio Grande River drainage (Girard 1857). Under ICZN protocols, the name follows the type specimen to which the name was originally assigned. Thus, *O. c. stomias* is not the valid name for the Greenback Cutthroat Trout unless and until the ICZN approves the substitution of a new type specimen from the South Platte River drainage for the current holotype. A request to make that substitution has not yet been made.

As already noted, a majority of the panelists favors recognizing each of the four major evolutionary lines as valid species that have given rise to the 25 modern UIEUs identified during the Special Workshop and listed in this volume. According to that proposed reclassification, Cutthroat Trout would be divided into four species, each with its derived modern UIEUs. For these four major lines, the binomial scientific species names would be those applied earliest to type specimens of each line, that is, *Oncorhynchus clarkii* (Richardson 1836), *O. lewisi* (Girard 1857), and *O. henshawi* (Jordan 1891) for the coastal, upper Columbia/Missouri River (Westslope), and Lahontan Basin species, respectively, and *O. virginalis* (Girard 1857) for the upper Snake River/Yellowstone species. Two new common names already proposed by panelists for this new *O. virginalis* species are Black-spotted Cutthroat Trout, a name often used in the past by popular writers and fish culturists (Cope 1886; Bradner 1969; Rosenlund and Rosenlund 1989; Behnke 2002), and Rocky Mountain Cutthroat Trout because the UIEUs of this lineage occupy most of the length of the Rocky Mountain chain. Although *bouvieri* may not have priority as a species name in this proposal, it could still be used as a subspecies scientific name (as *O. virginalis bouvieri*) for the UIEU currently known as the Yellowstone Cutthroat Trout if that population group continues to be regarded as a subspecies. Likewise, *virginalis* as a species name for the entire Upper Snake River/Yellowstone evolutionary lineage could be retained as a subspecies name (as *O. virginalis virginalis*) for the Rio Grande Cutthroat Trout. The common names for Behnke's original 14 subspecies would be retained for UIEUs identified by panelists, as would his trinomial scientific names, should they continue to be recognized as subspecies. However, new common names (and new trinomial scientific names, along with type specimens appropriately chosen and formally described if they are named as subspecies) will be required for the newly recognized UIEUs. A formal redefinition and more appropriate type specimen for the Greenback Cutthroat Trout will also be required to revalidate the subspecies name *O. c. stomias*. Box 2 is a chart of proposed scientific and common names for the four Cutthroat Trout species and 25 UIEUs that would be recognized in this reclassification. It shows both the existing names and how they would be used and the naming gaps that would need to be filled in.

The alternative point of view among the panelists favored continuing to treat Behnke's four major subspecies as four major evolutionary lineages, but lineages that have diverged relative to one another as shown in Figures 3 and 4 and Shiozawa et al.'s (2018) Figure 12. The 25 modern UIEUs (or subspecies) would be recognized as subunits of the single species *O. clarkii*, as is done now. This would preserve some of the classification status quo with present names being retained, but newly recognized UIEUs (or subspecies) would still require new scientific and common names with appropriate type specimens formally described for each, including, possibly, a revalidation of the subspecies name *O. c. stomias* for Greenback Cutthroat Trout. Box 3 is a chart of proposed scientific and common names that would be recognized in this reclassification.

Box 2. Names if Major Evolutionary Lines are Recognized as Four Species

Evolutionary lineage	Species name: Scientific binomial	Species name: Common	Uniquely identifiable evolutionary unit: Trinomial (if named as subspecies)	Uniquely identifiable evolutionary unit: Common name
Coastal	*Oncorhynchus clarkii*	Coastal Cutthroat Trout	*clarkii*	Coastal Cutthroat Trout
Lahontan basin	*O. henshawi*	Lahontan Basin Cutthroat Trout	*seleniris*	Paiute Cutthroat Trout
			henshawi	Western Lahontan Cutthroat Trout
			humboldtensis	Eastern Lahontan Cutthroat Trout
			Unnamed	Northeastern Lahontan Cutthroat Trout
			Unnamed	Coyote Basin or Willow–Whitehorse Cutthroat Trout
			alvordensis	Alvord Basin Cutthroat Trout (extinct)
Upper Columbia/ Missouri (Westslope)	*O. lewisi*	Westslope Cutthroat Trout	Unnamed	John Day Cutthroat Trout
			Unnamed	Coeur d'Alene Cutthroat Trout
			Unnamed	St. Joe Cutthroat Trout
			Unnamed	North Fork Clearwater Cutthroat Trout
			Unnamed	Clearwater Headwaters Cutthroat Trout
			Unnamed	Salmon River Cutthroat Trout
			Unnamed	Clearwater–Eastern Cascades Cutthroat Trout

Box 2 continues

Box 2. Continued

Evolutionary lineage	Species name: Scientific binomial	Species name: Common	Uniquely identifiable evolutionary unit: Trinomial (if named as subspecies)	Uniquely identifiable evolutionary unit: Common name
			Unnamed	Neoboreal Cutthroat Trout
			Subspecies 8	Neoboreal Cutthroat Trout
			lewisi (?)	Missouri River Cutthroat Trout
Upper Snake	*O. virginalis*	Black-spotted or Rocky Mountain Cutthroat Trout	*bouvieri*	Yellowstone Cutthroat Trout
			Unnamed	Bear River Cutthroat Trout
			utah	Bonneville Cutthroat Trout
			virginalis	Rio Grande Cutthroat Trout
			stomias, subject to revalidation	Greenback Cutthroat Trout
			macdonaldi	Yellowfin Cutthroat Trout (extinct)
			pleuriticus	Colorado River or Grand River Cutthroat Trout
			Unnamed	Green River Cutthroat Trout
			Unnamed	San Juan Cutthroat Trout (extinct)

Concluding Remarks and Recommendations, Avenues for Further Research

The majority of panelists believed that available evidence supports classifying Cutthroat Trout as four species with 25 modern UIEUs (or subspecies, depending on resolution of the appropriateness of applying the term "subspecies" to the classification of these fishes) based on the delimiting criteria of the unified species concept. This is the majority recommendation we put forward here. Such a revision would represent the most significant reclassification of western North American trout since Smith and Stearley (1989) assigned western trouts to the

Box 3. Names if Recognized as Single Species

Species name			Uniquely identifiable evolutionary unit	
Scientific binomial	Common	Evolutionary lineage	Trinomial (if named as subspecies)	Common name
Oncorhynchus clarkii	Cutthroat Trout	Coastal	*clarkii*	Coastal Cutthroat Trout
		Lahontan Basin	*henshawi*	Lahontan Cutthroat Trout
			seleniris	Paiute Cutthroat Trout
			humboldtensis	Humboldt Cutthroat Trout
			Unnamed	Quinn River Cutthroat Trout
			Unnamed	Coyote Basin or Willow–Whitehorse Cutthroat Trout
			alvordensis	Alvord Cutthroat Trout (extinct)
		Upper Columbia/ Missouri (Westslope)	Unnamed	John Day Cutthroat Trout
			Unnamed	Coeur d'Alene Cutthroat Trout
			Unnamed	St. Joe Cutthroat Trout
			Unnamed	North Fork Clearwater Cutthroat Trout
			Unnamed	Clearwater Headwaters Cutthroat Trout
			Unnamed	Salmon River Cutthroat Trout
			Unnamed	Clearwater–Eastern Cascades Cutthroat Trout
			Unnamed	Neoboreal Cutthroat Trout

Box 2 continues

Box 3. Continued

Species name			Uniquely identifiable evolutionary unit	
Scientific binomial	Common	Evolutionary lineage	Trinomial (if named as subspecies)	Common name
			lewisi	Missouri River Cutthroat Trout
		Upper Snake River	*bouvieri*	Yellowstone Cutthroat Trout
			Unnamed	Bear River Cutthroat Trout
			utah	Bonneville Cutthroat Trout
			virginalis	Rio Grande Cutthroat Trout
			pleuriticus	Colorado River or Grand River Cutthroat Trout
			stomias, subject to revalidation	Greenback Cutthroat Trout
			macdonaldi	Yellowfin Cutthroat Trout (extinct)
			Unnamed	Green River Cutthroat Trout
			Unnamed	San Juan Cutthroat Trout (extinct)

genus *Oncorhynchus* rather than *Salmo* and changed the scientific name of North American Rainbow Trout from *Salmo gairdneri* to *Oncorhynchus mykiss*. We expect the recommendation will generate controversy, as has already been expressed by a minority of workshop panel members. The evidence used by panelists in arriving at this proposed revision is detailed in the chapters that follow.

Resolution of Cutthroat Trout taxonomy will remain a work in progress. Additional data from various lines of evidence may alter the hypothesis we put forth here. Additional avenues of further research already have been suggested, and many of these are discussed in Schultz et al. (2018, this volume). One panelist, for example, expressed concern that not all of the 25 taxa have been analyzed in a common study with a common set of genetic markers, and until that is done, there is no real basis for promoting or demoting any particular entity or lineage.

That work would be relatively inexpensive and would not take more than a few months to complete, providing everyone with a common frame of molecular reference. That panelist's hope for the Special Workshop was that it would lead to a level of collaboration that would foster such an analysis. That level of collaboration has yet to happen.

References

Allendorf, F. W., and R. F. Leary. 1988. Conservation and distribution of genetic variation in a polytypic species, the Cutthroat Trout. Conservation Biology 2:170–184.

AMEC (AMEC Environmental & Infrastructure, Inc.). 2014. Final summary report: Greenback Cutthroat Trout genetics and meristic studies facilitated expert panel workshop. Report prepared for U.S. Fish and Wildlife Service Region 6, Mountain-Prairie Region Ecological Services-Colorado Field Office by AMEC, Golden, Colorado.

Arnold, M. L. 2007. Evolution through genetic exchange. Oxford University Press, New York.

Baverstock, P. R., and C. Moritz. 1990. Sampling design. Pages 13–24 *in* D. M. Hillis and C. Moritz, editors. 1990. Molecular systematics. Sinauer Associates, Sunderland, Massachusetts.

Behnke, R. J. 1979. Monograph of the native trouts of the genus *Salmo* of western North America. U.S. Forest Service, Lakewood, Colorado.

Behnke, R. J. 1988. Phylogeny and classification of Cutthroat Trout. Pages 1–7 *in* R. E. Gresswell, editor. Status and management of interior stocks of Cutthroat Trout. American Fisheries Society, Symposium 4, Bethesda, Maryland.

Behnke, R.J. 1992. Native trout of western North America. American Fisheries Society, Monograph 6, Bethesda, Maryland.

Behnke, R. J. 2002. Trout and salmon of North America. The Free Press, New York.

Bestgen, K. R., K. B. Rogers, and R. Granger. 2013. Phenotype predicts genotype for lineages of native Cutthroat Trout in the Southern Rocky Mountains. Colorado State University, Larval Fish Laboratory, Fort Collins. Final report to U.S. Fish and Wildlife Service, Colorado Field Office, Denver.

Bradner, E. 1969. Northwest angling, 2nd edition. Binfords and Mort, Portland, Oregon.

Campbell, M. R., E. R. Keeley, C. C. Kozfkay, J. L. Loxterman, P. R. Evans, and D. K. Shiozawa. 2018. Describing and preserving the diversity of Cutthroat Trout in the Yellowstone River, Snake River, and Bonneville Basin. Pages 303–321 *in* P. Trotter, P. Bisson, L. Schultz, and B. Roper, editors. Cutthroat Trout: evolutionary biology and taxonomy. American Fisheries Society, Special Publication 36, Bethesda, Maryland.

Carstens, B. C., T. A. Pelletier, N. M. Reid, and J. D. Satler. 2013. How to fail at species delimitation. Molecular Ecology 22:4369–4383.

Coffin, P. D., and W. F. Cowan. 1995. Lahontan Cutthroat Trout (*Oncorhynchus clarki henshawi*) recovery plan. U.S. Fish and Wildlife Service, Portland, Oregon.

Cope, E. D. 1886. The most southern salmon. American Naturalist 20:735.

de Queiroz, K. 2007. Species concepts and species delimitation. Systematic Biology 56:879–886.

Drummond, A. J., M. A. Suchard, D. Xie, and A. Rambaut. 2012. Bayesian phylogenetics with BEAUti and the BEAST 1.7. Molecular Biology and Evolution 29:1969–1973.

Evans, R. P., and D. K. Shiozawa. 2001. The genetic status of Greenback Cutthroat Trout (*Oncorhynchus clarki stomias*) populations in Colorado. Final report for Colorado Division of Wildlife by Brigham Young University Department of Integrative Biology, Provo, Utah.

Garrett, G. P., and G. C. Matlock. 1991. Rio Grande Cutthroat Trout in Texas. The Texas Journal of Science 43:405–410.

Girard, C. F. 1857. Notice upon the species of the genus Salmo of authors, observed chiefly in Oregon and California. Proceedings of the Academy of Natural Sciences of Philadelphia 8:217–220.

Gold, J. R., J. C. Avise, and G. A. E. Gall. 1977. Chromosome cytology in the Cutthroat Trout series *Salmo clarki* (Salmonidae). Cytologia 42:377–382.

Houston, D. D., D. B. Elzinga, P. J. Maughan, S. M. Smith, J. S. K. Kauwe, R. P. Evans, R. B. Stinger, and D. K. Shiozawa. 2012. Single nucleotide polymorphism discovery in Cutthroat Trout subspecies using genome reduction, barcoding, and 454 pyro-sequencing. BMC Genomics [online serial] 13:724.

ICZN (International Commission on Zoological Nomenclature). 1999. International code of zoological nomenclature, 4th edition. International Trust for Zoological Nomenclature, c/o The Natural History Museum, London.

Jordan, D. D. 1878. Manual of the vertebrates of the northern United States, including the district east of the Mississippi River and North Carolina and Tennessee, exclusive of marine species, 2nd edition. Jansen, McClurg and Company, Chicago.

Jordan, D. S. 1894. Salmon and trout of the Pacific coast. Pages 125–141 *in* Thirteenth biennial report of the State Board of Fish Commissioners of the State of California for 1893–1894. Available: https://books.google.com/books?id=ceBHAQAAMAAJ. (January 2018).

Jordan, D. S., and A. Seale. 1896. Notes on fishes little known or new to science. Proceedings of the California Academy of Sciences (Series 2) 6:201–244.

Jordan, D. S., and B. W. Evermann. 1896. The fishes of North and Middle America: a descriptive catalog of the species of fish-like vertebrates found in the waters of North America north of the Isthmus of Panama. Smithsonian Institution, Bulletin of the United States National Museum 47 (Part I), Washington, D.C.

Jordan, D. S., and B. W. Evermann. 1902. American food and game fishes. Doubleday, Page and Company, New York.

Kaeding, L. R. 2001. Endangered and threatened wildlife and plants: 90-day finding for a petition to list the Yellowstone Cutthroat Trout as threatened. Federal Register 66:371(23 February 2001):11244–11249.

Kaeding, L. R. 2006. Management implications. Page 10 *in* R. W. Van Kirk, J. M. Capurso, and M. A. Novak, editors. Exploring differences between Fine-spotted and Large-spotted Yellowstone Cutthroat trout. American Fisheries Society, Idaho Chapter, Bethesda, Maryland.

Leary, R. F., and F. W. Allendorf. 1987. Genetic divergence and identification of seven Cutthroat Trout subspecies and Rainbow Trout. Transactions of the American Fisheries Society 116:580–587.

Link, P. K., and E. R. Keeley. 2018. Geologic constraints on Snake–Columbia River drainage changes and the associated evolutionary diversification of Cutthroat Trout over the past 17 million years. Pages 53–75 *in* P. Trotter, P. Bisson, L. Schultz, and B. Roper, editors. Cutthroat Trout: evolutionary biology and taxonomy. American Fisheries Society, Special Publication 36, Bethesda, Maryland.

Loudenslager, E. J., and G. A. E. Gall. 1980. Geographic patterns of protein variation and subspeciation in Cutthroat Trout. Systematic Zoology 29:27–42.

Love Stowell, S. M., J. L. Metcalf, D. F. Markle, and A. P. Martin. 2018. Species conceptualization and delimitation: a framework for the taxonomic revision of Cutthroat Trout. Pages 33–51 *in* P. Trotter, P. Bisson, L. Schultz, and B. Roper, editors. Cutthroat Trout: evolutionary biology and taxonomy. American Fisheries Society, Special Publication 36, Bethesda, Maryland.

Loxterman, J. L., and E. R. Keeley. 2012. Watershed boundaries and geographic isolation: patterns

of diversification in Cutthroat Trout from western North America. BMC Evolutionary Biology [online serial] 12:38.

Mace, G. M. 2004. The role of taxonomy in species conservation. Philosophical transactions of the Royal Society of London B 359:711–719.

Markle, D. F. 2018. An interim classification of the Cutthroat Trout complex, *Oncorhynchus clarkii* sensu lato, with comments on nomenclature. Pages 181–197 *in* P. Trotter, P. Bisson, L. Schultz, and B. Roper, editors. Cutthroat Trout: evolutionary biology and taxonomy. American Fisheries Society, Special Publication 36, Bethesda, Maryland.

Mayden, R. L. 1997. A hierarchy of species concepts: the denouement in the saga of the species problem. Pages 381–423 *in* H. A. Claridge, M. Dawah and M. R. Wilson, editors. Species: the units of diversity. Chapman and Hall, London.

Mayden, R. L., and R. M. Wood. 1995. Systematics, species concepts, and the evolutionarily significant unit in biodiversity and conservation biology. Pages 58–113 *in* J. L. Nielsen and D. A. Power, editors. Evolution and the aquatic ecosystem: defining unique units in population conservation. American Fisheries Society, Symposium 17, Bethesda, Maryland.

Mayr, E. 1942. Systematics and the origin of species from the standpoint of a zoologist. Columbia University Press, New York.

Mayr, E. 1969. Principles of systematic zoology. McGraw-Hill, New York.

Metcalf, J. L., V. L. Pritchard, S. M. Silvestri, J. B. Jenkins, J. S. Wood, D. E. Cowley, R. P. Evans, D. K. Shiozawa, and A. P. Martin. 2007. Across the Great Divide: genetic forensics reveals misidentification of endangered Cutthroat Trout populations. Molecular Ecology 16:4445–4454.

Metcalf, J. L., V. L. Pritchard, S. M. Silvestri, J. B. Jenkins, J. S. Wood, D. E. Cowley, R. P. Evans, D. K. Shiozawa, and A. P. Martin. 2012. Historical stocking data and 19th century DNA reveal human-induced changes to native diversity and distribution of Cutthroat Trout. Molecular Ecology 21:5194–5207.

Montgomery, M. B. 1995. Many rivers to cross: of good running water, native trout, and the remains of wilderness. Simon and Schuster, New York.

Naomi, S. I. 2010. On the integrated frameworks of species concepts: Mayden's hierarchy of species concepts and de Queiroz's unified concept of species. Journal of Zoological Systematics and Evolutionary Research 49:1–8.

Nielsen, J. L., and G. K. Sage. 2002. Population genetic structure in Lahontan Cutthroat Trout. Transactions of the American Fisheries Society 131:376–388.

Page, L. M., H. Espinoza-Perez, L. T. Findley, C. R. Gilbert, R. N. Lea, N. K. Mandrak, R. L. Mayden, and J. S. Nelson. 2013. Common and scientific names of fishes from the United States, Canada, and Mexico, 7th edition. American Fisheries Society, Special Publication 34, Bethesda, Maryland.

Peacock, M. M., and V. Kirchoff. 2004. Assessing the conservation value of hybridized Cutthroat Trout populations in the Quinn River drainage. Transactions of the American Fisheries Society 133:309–325.

Peacock, M. M., H. M. Neville, and A. J. Finger. 2018. The Lahontan Basin evolutionary lineage of Cutthroat Trout. Pages 231–259 *in* P. Trotter, P. Bisson, L. Schultz, and B. Roper, editors. Cutthroat Trout: evolutionary biology and taxonomy. American Fisheries Society, Special Publication 36, Bethesda, Maryland.

Rogers, K. B. 2012. Piecing together the past: using DNA to resolve the heritage of our state fish. Colorado Outdoors 2012 September/October:28–32.

Rogers, K. B., K. R. Bestgen, and J. Epp. 2014. Using genetic diversity to inform conservation

efforts for native Cutthroat Trout of the Southern Rocky Mountains. Pages 218–228 *in* R. F. Carline and C. LoSapio, editors. 2014. Wild Trout XI: looking back and moving forward. Wild Trout Symposium, West Yellowstone, Montana. Available: www.wildtroutsymposium.com/wildTroutXI.php. (January 2018).

Rogers, K. B., K. R. Bestgen, S. M. Love Stowell, and A. P. Martin. 2018. Cutthroat Trout diversity in the Southern Rocky Mountains. Pages 323–341 *in* P. Trotter, P. Bisson, L. Schultz, and B. Roper, editors. Cutthroat Trout: evolutionary biology and taxonomy. American Fisheries Society, Special Publication 36, Bethesda, Maryland.

Rogers, K. L., E. E. Larson, G. Smith, D. Catzman, G., R. Smith, T. Cerling, Y. Wang, R. G. Baker, K. C. Lohmann, C. A. Repenning, P. Patterson, G. Mackie. 1992. Pliocene and Pleistocene geologic and climatic evolution in the San Luis Valley of south-central Colorado. Palaeogeography, Palaeoclimatology, Palaeoecology 94:55–86.

Rogers, K. L., C. A. Repenning, R. M. Forester, E. E. Larson, S. A. Hall, G. R. Smith, E. Anderson, and T. J. Brown. 1985. Middle Pleistocene (late Irvingtonian: Nebraskan) climatic changes in south-central Colorado. National Geographic Research 1:535–563.

Rosenlund, B. D., and T. R. Rosenlund. 1989. Leadville National Fish Hatchery 1889–1989. Fisheries 14(3):18–20.

Saglam, I. K., D. J. Prince, M. Meek, O. A. Ali, M. R. Miller, M. Peacock, H. Neville, A. Goodbla, C. Mellison, W. Somer, B. May, and A. J. Finger. 2017. Genomic analysis reveals genetic distinctiveness of the Paiute Cutthroat Trout *Oncorhynchus clarkii seleniris*. Transactions of the American Fisheries Society 146:1291–1302.

Schultz, L., N. F. Thompson, C. N. Cathcart, and T. H. Williams. 2018. Where the rubber meets the road: further research needs and implications for Cutthroat Trout management. Pages 343–362 *in* P. Trotter, P. Bisson, L. Schultz, and B. Roper, editors. Cutthroat Trout: evolutionary biology and taxonomy. American Fisheries Society, Special Publication 36, Bethesda, Maryland.

Shiozawa, D. K., R. P. Evans, D. D. Houston, and P. J. Unmack. 2018. Geographic variation, isolation, and evolution of Cutthroat Trout with comments on future directions for management and research. Pages 129–172 *in* P. Trotter, P. Bisson, L. Schultz, and B. Roper, editors. Cutthroat Trout: evolutionary biology and taxonomy. American Fisheries Society, Special Publication 36, Bethesda, Maryland.

Simpson, G. G. 1961. Principles of animal taxonomy. Columbia University Press, New York.

Smith, G. R., T. E. Dowling, K. W. Gobalet, T. Lugaski, D. K. Shiozawa, and R. P. Evans. 2002. Biogeography and timing of evolutionary events among Great Basin fishes. Pages 175–234 *in* R. Hershler, D. B. Madsen, and D. R. Curry, editors. Great Basin aquatic systems history. Smithsonian Institution Press, Smithsonian Contributions to the Earth Sciences 33, Washington, D.C.

Smith, G. R., N. Morgan, and E. Gustafson. 2000. Fishes of the Mio-Pliocene Ringold Formation, Washington: Pliocene capture of the Snake River by the Columbia River. University of Michigan Papers in Paleontology 32.

Smith, G. R., and R. F. Stearley. 1989. The classification and scientific names of Rainbow and Cutthroat trouts. Fisheries 14(1):4–10.

Smith, G. R., and R. F. Stearley. 2018. The fossil record of Cutthroat Trout: implications for evolution and conservation. Pages 77–101 *in* P. Trotter, P. Bisson, L. Schultz, and B. Roper, editors. Cutthroat Trout: evolutionary biology and taxonomy. American Fisheries Society, Special Publication 36, Bethesda, Maryland.

Stearley, R. F., and G. R. Smith. 2016. Fishes of the Mio-Pliocene western Snake River plain and vicinity. 1. Salmonid fishes from Mio-Pliocene lake sediments in the western Snake River

plain and the Great Basin. Miscellaneous Publications Museum of Zoology University of Michigan 204.

Toline, C., T. Seamons, and J. Hudson. 1999. Mitochondrial DNA analysis of selected populations of Bonneville, Colorado River, and Yellowstone Cutthroat Trout. Final report of Utah State University, Department of Fisheries and Wildlife to Utah Division of Wildlife Resources, Salt Lake City.

Trotter, P. C., and R. J. Behnke. 2008. The case for humboldtensis: a subspecies name for the indigenous Cutthroat Trout (*Oncorhynchus clarkii*) of the Humboldt River, upper Quinn River, and Coyote basin drainages, Nevada and Oregon. Western North American Naturalist 68:58–65.

Wallace, A. R. 2003. Regional geologic setting of late Cenozoic lacustrine diatomite deposits, Great Basin and surrounding region: overview and plans for investigation. U.S. Geological Survey, Bulletin 2209-B, Reston, Virginia.

Wallace, A. R., M. E. Perkins, and R. J. Fleck. 2008. Late Cenozoic paleogeographic evolution of northeastern Nevada: evidence from sedimentary basins. Geosphere 4:36–74.

Wallace, R. L., and D. W. Zaroban. 2013. Native fishes of Idaho. American Fisheries Society. Bethesda, Maryland.

Wiley, E. O. 1978. The evolutionary species concept reconsidered. Systematic Zoology 27:17–26.

Wilkins, J .S. 2009. Species: a history of the idea. University of California Press, Berkeley.

Williams, T. H., K. E. Griswold, E. R. Keeley, K. P. Currens, and G. H. Reeves. 2018. Diversity of Coastal Cutthroat Trout across their distributional range. Pages 199–230 *in* P. Trotter, P. Bisson, L. Schultz, and B. Roper, editors. Cutthroat Trout: evolutionary biology and taxonomy. American Fisheries Society, Special Publication 36, Bethesda, Maryland.

Wilson, E. O., and W. L. Brown, Jr. 1953. The subspecies concept and its taxonomic application. Systematic Zoology 2:97–111.

Wilson, W. D., and T. F. Turner. 2009. Phylogenetic analysis of the Pacific Cutthroat Trout (*Oncorhynchus clarki* ssp.: Salmonidae) based on partial mtDNA ND4 sequences: a closer look at the highly fragmented inland species. Molecular Phylogenetics and Evolution 52:406–415.

Young, M. K., K. S. McKelvey, T. Jennings, K. Carter, R. Cronn, E. R. Keeley, J. L. Loxterman, K. L. Pilgrim, and M. K. Schwartz. 2018. The phylogeography of Westslope Cutthroat Trout. Pages 261–301 *in* P. Trotter, P. Bisson, L. Schultz, and B. Roper, editors. Cutthroat Trout: evolutionary biology and taxonomy. American Fisheries Society, Special Publication 36, Bethesda, Maryland.