Western North American Naturalist 72(4), © 2012, pp. 457–472

POPULATION GENETICS OF *NEVIUSIA CLIFTONII* (SHASTA SNOW-WREATH): PATTERNS OF DIVERSITY IN A RARE ENDEMIC

Jennifer DeWoody[1,4], Len Lindstrand III[2], Valerie D. Hipkins[1], and Julie Kierstead Nelson[3]

ABSTRACT.—*Neviusia cliftonii* (Rosaceae), the Shasta snow-wreath, is an endemic shrub found in the vicinity of Shasta Lake, Shasta County, California. First described 20 years ago, the species is of conservation concern due to its restricted range, a low number of known populations, and the potential impacts on or threats to many of these populations. To assess the genetic structure of *N. cliftonii,* 21 of the 23 known populations were sampled for isozyme analysis. Genetic and multivariate analyses were used to assess levels of genet (genotypic) diversity, allelic variation, and population differentiation. When assessed at 17 loci, a total of 48 multilocus genotypes were identified in the collection of 410 samples, indicating *N. cliftonii* is capable of significant vegetative reproduction. Five populations were composed of a single genet each, with an average of 3.14 genets per population and a maximum of 15 genets in a single population. Allelic diversity was low, with a maximum of 3 alleles observed at one locus. Populations were differentiated, with 85% of the allele frequency variance distributed among populations. Multivariate analysis identified 3 clusters of genetically similar populations: one cluster composed of 15 populations, a second cluster composed of 5 populations, and one population being distinct. Individuals from the distinct population displayed unique alleles at 2 loci (AAT-1 and AAT-2). The distribution of populations among clusters did not correspond to geographic (watershed) or substrate classifications, indicating that additional, unmeasured factors may influence the genetic structure of this species.

RESUMEN.—*Neviusia cliftonii* (Rosaceae), "Shasta snow-wreath," es un arbusto endémico que se encuentra en las inmediaciones del Lago Shasta, en el condado de Shasta en California. Se describió por primera vez hace veinte años y se considera una especie de preocupación por su conservación debido a su distribución restringida, la escasa cantidad de poblaciones conocidas y los posibles impactos o amenazas a muchas de estas poblaciones. Para evaluar la estructura genética de *N. cliftonii*, se muestrearon 21 de las 23 poblaciones conocidas para un análisis de isoenzimas. Los análisis genéticos y multivariados se utilizaron para evaluar los niveles de diversidad de genets (genotípica), la variación alélica y la diferenciación poblacional. Al evaluarse en 17 loci, se identificaron un total de 48 genotipos multilocus en la colección de 410 muestras, lo que indica que *N. cliftonii* es capaz de una reproducción vegetativa significativa. Cinco poblaciones estuvieron compuestas de un solo genet cada una, con un promedio de 3.14 genets por población y un máximo de 15 genets en una sola población. La diversidad alélica fue baja, con un máximo de tres alelos observados en un locus. Las poblaciones estuvieron diferenciadas, con 85% de la varianza en la frecuencia de alelos distribuida entre las poblaciones. Los análisis multivariados identificaron tres grupos de poblaciones genéticamente similares: un grupo compuesto de 15 poblaciones, un segundo grupo compuesto de cinco poblaciones y una población marcadamente diferente. Los individuos de la población diferente mostraron alelos únicos en dos loci (AAT-1 y AAT-2). La distribución de las poblaciones entre los grupos no correspondió a las clasificaciones geográficas (cuencas) o de sustrato, lo que indica que factores adicionales y que no fueron medidos pueden influir en la estructura genética de esta especie.

Although the potential for genetic processes to directly contribute to the decline of rare species has been debated (Lande 1988, Gitzendanner and Soltis 2000), thorough literature reviews have shown that species that are rare or that occupy fragmented habitats tend to display lower genetic variation or heterozygosity than their common relatives (Cole 2003, Spielman et al. 2004). Whether low genetic variation is a cause or a consequence of rarity likely varies between species. The most effective conservation plans should account for the level of genetic variation and differentiation, though the weight given to genetic criteria in the plan should be determined on a case-by-case basis (Taylor and Dizon 1999). Examining the pattern of genetic diversity among populations can provide insight into the demographic or ecological processes characteristic of the species (DeWoody et al. 2004).

The reproductive strategy and the dispersal mechanism of a plant species are 2 factors that can have a significant effect on the level of genetic differences observed among populations

[1]USDA Forest Service, National Forest Genetics Lab, 2480 Carson Road, Placerville, CA 95667.
[2]North State Resources, Inc., 5000 Bechelli Lane, Redding, CA 96002.
[3]USDA Forest Service, Shasta–Trinity National Forest, 3644 Avtech Parkway, Redding, CA 96002.
[4]E-mail: jdewoody@yahoo.com

(Hamrick and Godt 1996). Molecular markers may provide confirmation of clonal reproduction in populations, with individual plants (ramets) arising from a single genetic individual (genet) having the same molecular genotype. Previous studies of plant species capable of both sexual and clonal reproduction indicate that vegetative spread is more likely in rare and endangered species, as well as in older populations within species (Silvertown 2008). One possible consequence of vegetative reproduction is a greater potential for populations to be genetically distinct, as vegetatively reproducing species tend to have poor dispersal capability (Ellstrand and Roose 1987, Silvertown 2008). Plants that have mechanisms for long-distance dispersal via either pollen or seed typically display lower levels of genetic differentiation between populations than those with limited dispersal (Hamrick and Godt 1996).

In addition to elucidating demographic processes, the level and distribution of genetic variation in a species may reflect the extent of that species' range. Lower levels of genetic variation are typically observed in rare and endemic species than in closely related taxa having broader distributions (Cole 2003). This loss of genetic variation may result from higher levels of genetic drift in narrowly distributed species, but levels of gene flow and genetic differentiation (e.g., F_{ST}) do not differ between rare and common congeners, indicating habitat limitation alone is not sufficient to explain these trends (Cole 2003). In this sense, rarity should not be confused with small population size, as species with limited ranges may exist in large populations locally (Rabinowitz 1981, Kaye et al. 1997). Genetic variation is also affected by habitat fragmentation, which is associated with reduced population size and increased isolation, which in turn results in decreased gene flow. Genetic diversity is typically lower in smaller or fragmented populations and continues to decrease with time elapsed since fragmentation occurred (Honnay and Jacquemyn 2007, Aguilar et al. 2008).

Neviusia cliftonii Shevock, Ertter & D.W. Taylor (Rosaceae), the Shasta snow-wreath, was described as the second member of the genus from a collection made near Redding, California (Shevock et al. 1992). Before the description of *N. cliftonii,* the only species in the genus was *Neviusia alabamensis* A. Gray, which occurs in the southern Appalachian Mountains and west into the Ozark Plateau (Freiley 1994). While both species are deciduous shrubs having flowers distinguished by showy stamens, *N. cliftonii* occasionally has one or more reduced, deciduous petals at the base of the flower, while *N. alabamensis* always lacks petals (Shevock et al. 1992). A genetic report of *N. alabamensis* populations from Arkansas, the western edge of the species range, described a single genetic individual per population, indicating that reproduction in this genus may be primarily vegetative (Freiley 1994). *Neviusia cliftonii* is restricted to watersheds near Shasta Lake, the largest reservoir in California, created by construction of Shasta Dam, which flooded portions of the Sacramento, McCloud, and Pit rivers in 1945. Populations are most often found in riparian zones within montane hardwood-conifer forests (Lindstrand and Nelson 2005). Local populations range in size from <20 to >1000 individual shrubs, indicating that though this species is globally restricted, it can be locally common. Both species of *Neviusia* are considered relict species descended from a formerly widespread genus, with fossil evidence from southern British Columbia supporting the ancient origin of the genus (DeVore et al. 2004). The description of this relict species in the Shasta Lake region further supports the view that the unique biodiversity of the area results from the ancient geology and lack of glacial or volcanic activity in the area (Lindstrand and Nelson 2006).

Initial species accounts and taxonomic keys described *N. cliftonii* as a limestone endemic, since the initial populations found were associated with limestone outcrops (Lindstrand and Nelson 2006). Subsequent searches have located populations on a variety of substrates derived from metamorphic and igneous formations, such that currently 57% of populations are not associated with limestone formations (L. Lindstrand III, personal observation). However, given the initial description of the species as a limestone endemic (Shevock et al. 1992), testing for genetic differences between populations occurring on limestone and nonlimestone soils is warranted in order to best inform conservation efforts.

Most of the 23 known populations of Shasta snow-wreath are located on National Forest lands managed by the Shasta–Trinity National Forest. Conservation of the species is a priority for the agency, which manages snow-wreath under its sensitive species program. Many of the known populations face current or potential

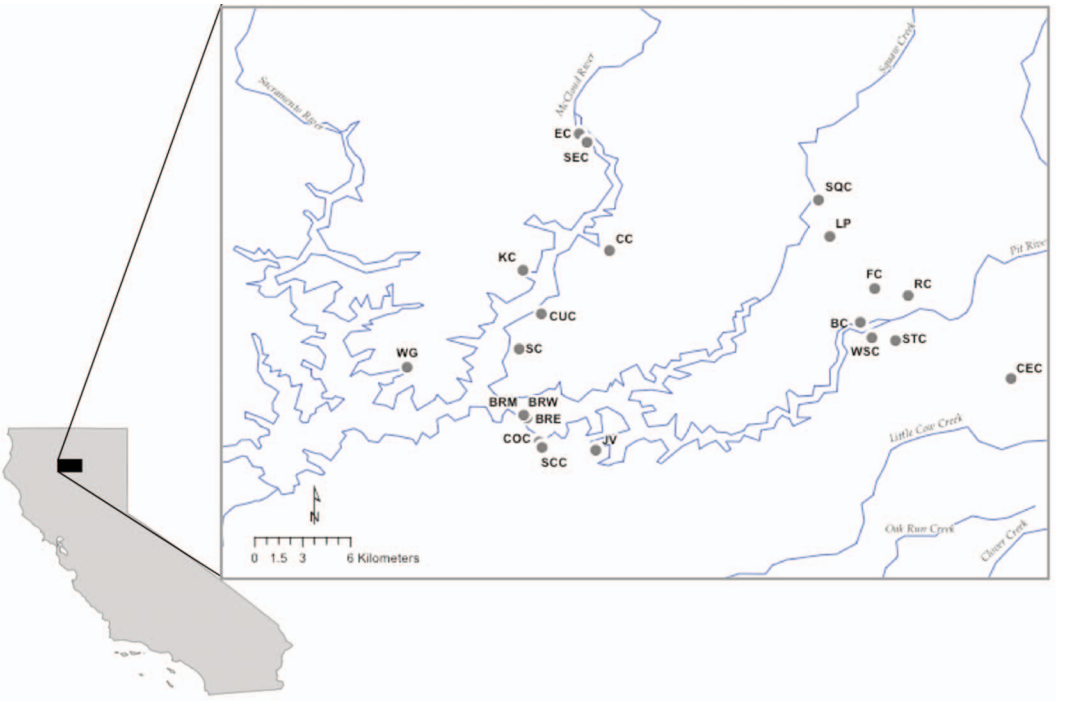

Fig. 1. Locations of 21 populations of *Neviusia cliftonii*, a shrub endemic to the Shasta Lake region of northern California, sampled for isozyme analysis.

anthropogenic impacts. Over one-half of the known populations reach their lower limit at the edge of Shasta Lake, leading to the logical conclusion that some populations were inundated by the rising waters of Shasta Lake in 1945 (Lindstrand and Nelson 2006). Perhaps before that event, Shasta snow-wreath populations were connected by the riparian zones of the Sacramento, McCloud, and Pit rivers and their tributaries. The addition of genetic data from this and other studies may improve efforts to design germplasm collection and reestablishment plans.

This study of 21 populations assayed 17 isozyme loci to address 3 questions. First, how many genetic individuals compose each population? Second, how is genetic diversity distributed within and among populations? Third, do patterns of genetic diversity or genetic similarity among populations correspond to geographic or ecological factors?

METHODS

Twenty-one populations of *N. cliftonii* were sampled for genetic analysis during 2009, and one population (Jones Valley) was sampled in 2010 (Fig. 1, Table 1). Two additional known populations occur on private land and were not sampled. Samples were collected in spring or early summer before flowering commenced. Leaf material from 20 individuals per population (except 10 individuals from one population that was too small to provide 20 samples) was collected in the field and stored on wet ice or refrigerated until delivery to the National Forest Genetics Laboratory in Placerville, California.

In order to assess whether genetic structure varied with ecological factors, a number of characteristics were collated for each site. The watershed of each population was used as a geographic factor grouping populations within river systems. In addition, the order-3 soil map unit (USDA Forest Service 1983) and the geologic bedrock type (USDA Forest Service 2004, verified in the field by sample collectors) were considered as abiotic factors (Table 1). Finally, the categorical size of the population was considered, with populations designated small (<100 plants), medium (100–1000 plants), or large (>1000 plants). Two populations

TABLE 1. Location and substrate details of 21 populations of *Neviusia cliftonii* sampled for isozyme analysis.

Population	Abbrev.	Watershed	Order 3 soil type	Geologic soil type	Latitude[a]	Longitude[a]	N
Blue Ridge East	BRE	Pit River	105, Holland family–Holland family, deep complex, 40%–60% slopes	Shale; siltstone; metavolcanic; w/limestone; & undiff.	40.75747°	122.27665°	20
Blue Ridge Mid	BRM	Pit River	105, Holland family–Holland family, deep complex, 40%–60% slopes	Shale; siltstone; metavolcanic; w/limestone; & undiff.	40.76011°	122.27835°	10
Blue Ridge West	BRW	Pit River	105, Holland family–Holland family, deep complex, 40%–60% slopes	Shale; siltstone; metavolcanic; w/limestone; & undiff.	40.7594°	122.27837°	20
Brock Creek	BC	Pit River	179, Marpa–Goulding families association, 20%–40% slopes	Limestone; thin-bedded to massive; gray; fossiliferous	40.81136°	122.08837°	20
Campbell Creek	CC	McCloud River	102, Holland–Goulding families association, 40%–60% slopes	Tuffaceous mudstone w/lesser mafic flows; sandstone; cherty quartzite; other ms; & undiff.	40.8522°	122.22987°	20
Cedar Creek	CEC	Cow Creek	250, Rock outcrop, limestone	Limestone; thin-bedded to massive; gray; fossiliferous	40.7799°	122.00323°	20
Cove Creek, Site 1	COC	Pit River	178, Marpa–Goulding families association, 20%–40% slopes	Meta-andesite (quartz keratophyre); meta-dacite; porphyritic & non-mafic flows; & undiff.	40.74439°	122.26946°	20
Curl Creek	CUC	McCloud River	105, Holland family–Holland family, deep complex, 40%–60% slopes	Greenstone & greenstone breccia	40.8159°	122.26839°	20
Ellery Creek	EC	McCloud River	250, Rock outcrop, limestone.	Limestone	40.91775°	122.24689°	20
Flat Creek	FC	Pit River	180, Marpa–Goulding families association, 60%–80% slopes	Andesitic volcaniclastic & pyroclastic rocks; conglomerate; & undiff.	40.83046°	122.08008°	20
Jones Valley	JV	Pit River	182, Marpa–Holland, deep families complex, 20%–40% slopes	Shale; siltstone; metavolcanic; w/limestone; & undiff.	40.7397°	122.23765°	20
Keluche Creek	KC	McCloud River	105, Holland family–Holland family, deep complex, 40%–60% slopes	Meta-pyroclastic & keratophyre; & undiff.	40.84088°	122.27864°	20
Low Pass	LP	Squaw Creek	250, Rock outcrop, limestone	Limestone; thin-bedded to massive; gray; fossiliferous	40.86021°	122.10569°	20
Ripgut Creek	RC	Pit River	180, Marpa–Goulding families association, 60%–80% slopes	Andesitic volcaniclastic & pyroclastic rocks; conglomerate; & undiff.	40.82619°	122.06137°	20
Shasta Caverns	SC	McCloud River	82, Goulding–Holland families association, 40%–60% slopes	Greenstone & greenstone breccia	40.79663°	122.28097°	20
South of Cove Creek	SCC	Pit River	178, Marpa–Goulding families association, 20%–40% slopes	Shale; siltstone; metavolcanic; w/limestone; & undiff.	40.74097°	122.26807°	20

TABLE 1. Continued.

Population	Abbrev.	Watershed	Order 3 soil type	Geologic soil type	Latitude[a]	Longitude[a]	N
South of Ellery Creek	SEC	McCloud River	105, Holland family–Holland family, deep complex, 40%–60% slopes	Quartz diorite; albite - two pyroxene qd; mafic qd; diorite	40.91323°	122.24268°	20
Squaw Creek	SQC	Squaw Creek	222, Neums family–Neums family, deep complex, 60%–80% slopes	Limestone; thin-bedded to massive; gray; fossiliferous	40.88052°	122.11186°	20
Stein Creek	STC	Pit River	204, Neums family, 60%–80% slopes	Andesitic volcaniclastic & pyroclastic rocks; conglomerate; & undiff.	40.80109°	122.06846°	20
Waters Gulch	WG	Sacramento River	117, Holland family, deep, 40%–60% slopes	Greenstone; & undiff.	40.78586°	122.34406°	20
West of Stein Creek	WSC	Pit River	120, Holland family, deep–Holland family complex, 40%–60% slopes	Shale; siltstone; metavolcanic; w/limestone; & undiff.	40.80294°	122.0818°	20

[a]Latitude and longitude provided in dd.ddddd following NAD27.

were designated small (BRM and SC), 6 populations medium (BRE, BC, JV, KC, RC, and SCC), and the remaining populations large.

Isozyme Analysis

Leaf tissue (about 40 mg per sample) was submerged in extraction buffer (Cheliak and Pitel 1984) and frozen at –80 °C until electrophoresis. On the morning of the electrophoretic run, samples were thawed, macerated, and absorbed onto paper wicks 3 mm wide.

Starch gel (11% w/v) electrophoresis using stain recipes adapted from Wendel and Weeden (1989) revealed 17 loci in 3 buffer systems (Conkle et al. 1982). Four loci were resolved in a lithium borate electrode buffer–tris citrate gel buffer combination (system LB): aconitate hydratase (ACO; EC 4.2.1.3), leucine aminopeptidase (LAP; EC 3.4.11.1), phosphoglucomutase (PGM; EC 5.4.22), and malic enzyme (ME; EC 1.1.1.40). Seven loci were resolved in a sodium borate electrode buffer–tris citrate gel buffer combination (system SB): phosphoglucose isomerase (PGI1 and PGI2; EC 5.3.1.9), aspartate aminotransferase (AAT1 and AAT2; EC 2.6.1.1), uridine diphosphoglucose pyrophosphorylase (UGPP; EC 2.7.7.9), and triosephosphate isomerase (TPI1 and TPI2; EC 5.3.1.1). Six loci were resolved in a morpholine citrate electrode and gel buffer, pH 6.1 (system MC6): phosphogluconate dehydrogenase (6PGD1 and 6PGD2; EC 1.1.1.44), isocitrate dehydrogenase (IDH; EC 1.1.1.42), shikimic acid dehydrogenase (SKD; EC 1.1.1.25), and malate dehydrogenase (MDH1 and MDH3; EC 1.1.1.37).

Data Analysis

Genetic individuals (genets) represented by more than one sample (ramet) were identified using the Multilocus Matches function of GenAlEx v6.0 (Peakall and Smouse 2006). In order to minimize misclassification of samples as the same genet, missing data were considered sufficient to reject identity (see Results). The percent polymorphic loci (P), mean alleles per locus (A), observed heterozygosity (H_O), and, when multiple genets were identified in a population, the fixation index (F) were estimated for each locus using GenAlEx v6.0 (Peakall and Smouse 2006).

To describe the relative genetic difference between pairs of populations, Nei's (1972) genetic distance and genetic identity were estimated

using GenAlEx v6.0 (Peakall and Smouse 2006). In order to describe the overall differences or similarities between populations, a multivariate analysis was conducted. A principle coordinates analysis (PCoA) was conducted in GenAlEx v6.0 (Peakall and Smouse 2006) based on the standardized covariance matrix derived from Nei's genetic distance, which is built over 999 permutations. The PCoA plots represent the maximized but uncorrelated (orthogonal) differences between all individuals, providing a visual depiction of genetic similarity in 2 dimensions.

Isolation by distance was assessed using Mantel tests over the matrices of Nei's (1972) genetic distance and the geographic distance between populations. Significance was assessed from 999 permutations of the data in order to identify the distribution of the random association between genetic and geographic distance.

The putative phylogenetic relationship between populations was assessed with a population phenogram built from the matrix of Nei's (1972) genetic distance. The unrooted phenogram was built using neighbor-joining methods and significant topologies (branches) determined from 1000 bootstrap replications. The consensus tree was built using the extended majority rule methods as employed by Phylip (Felsenstein 1989). Due to null data at 2 loci (ACO and SKD) in some populations, these loci were dropped from the consensus phenogram. In order to compare the impact of removing these data, the topology of both the consensus tree (the statistically more robust version) and the raw population phenogram were inspected.

To assess differences in genet diversity among populations of *N. cliftonii,* an analysis of variance (ANOVA) was performed to assess variation in the number of genets observed in each population among watersheds, soil types, and population size. Due to the fine scale of the order-3 soil classification, several classes had limited replication. In order to minimize the effects of the low replication, the order-3 soil types were grouped into 3 family classes: the Holland–Goulding–Marpa class, the Neuns family class, and the limestone class. Boxplots were used to visualize any patterns among the number of genets and ecological grouping. ANOVA and boxplot analyses were conducted in the statistical program R v 2.10.0 (R Project for Statistical Computing). To describe the genetic differentiation among populations grouped by ecological variables, analysis of molecular variance (AMOVA) was conducted on allele frequencies. First, all populations were analyzed without higher-order grouping. Second, populations were grouped according to watershed and soil type (Table 1) in 2 separate analyses. Third, populations were classified according to the clusters identified by the PCoA. The variance associated with populations within each group and among groups was estimated using the AMOVA function in GenAlEx v6.0 (Peakall and Smouse 2006).

RESULTS

Low levels of genotypic diversity were resolved at the 17 isozyme loci assessed in *N. cliftonii.* A total of 48 unique multilocus genotypes were observed in the collection of 410 samples (Table 2, Appendix). A single genetic individual was observed in 5 populations (Table 2), with a maximum of 15 genets observed at one site (STC). An average of 3.14 (SE = 0.66) genets were observed per population, with the median and mode values of the distribution equal to 2 genets per population.

Similarly low levels of allelic diversity were observed in *N. cliftonii.* Eleven loci (64.7%) were polymorphic, while 6 loci had only a single isoform. Due to the low level of diversity observed within populations, allelic diversity was assessed over loci for the entire collection (Table 3). A maximum of 3 alleles were observed at a single locus (6PGD-2). When multiple genets were observed in a population, the fixation indices tended to be negative, indicating low levels of homozygosity relative to the Hardy–Weinberg equilibrium (Table 3). The overall negative fixation index ($F = -0.300$) indicates the allelic variants tend to occur in a heterozygous state.

Consistent with the low level of allelic variation observed in the collection of *N. cliftonii,* measures of genetic identity were relatively high and genetic distance low between populations (Table 4). Multivariate analysis of the genetic distances using PCoA revealed structure among populations. The first 2 principal coordinate axes accounted for a total of 70% of the variance among populations and grouped the collections into 3 distinct clusters (Fig. 2). In particular, the majority of populations

TABLE 2. Genotypic diversity observed in populations of *Neviusia cliftonii* as estimated by isozyme analysis.

Population[a]	No. genets	G/N	Genet label	No. samples
BC	3	0.15	M	15
			N	4
			OO	1
BRE	1	0.05	M	20
BRM	1	0.1	II	10
BRW	1	0.05	A	20
CC	2	0.1	KK	16
			LL	4
CEC	6	0.3	K	1
			X	6
			Y	4
			Z	5
			HH	1
			NN	3
COC	4	0.2	A	5
			C	1
			Q	4
			R	10
CUC	4	0.2	T	3
			MM	10
			RR	2
			SS	5
EC	2	0.1	C	2
			F	18
FC	3	0.15	I	1
			J	11
			L	8
JV	1	0.05	JJ	20
KC	2	0.1	M	10
			O	10
LP	4	0.2	B	8
			D	2
			W	8
			KK	2
RC	2	0.1	C	1
			F	19
SC	1	0.05	M	20
SCC	4	0.2	S	9
			CC	1
			JJ	6
			LL	4
SEC	4	0.2	C	3
			F	3
			I	8
			J	6
SQC	2	0.1	AA	19
			QQ	1
STC	15	0.75	G	2
			P	2
			S	1
			U	3
			V	2
			BB	1
			DD	1
			EE	1
			FF	1
			GG	1
			KK	1
			PP	1
			TT	1
			UU	1
			VV	1
WG	2	0.1	C	1
			LL	19
WSC	2	0.1	E	1
			H	19

[a]Population abbreviations in Table 1.

TABLE 3. Genetic diversity observed at 17 isozyme loci assessed in 21 populations of *Neviusia cliftonii.*

Locus	N	A[a]	H_o[b]	H_e[c]	F[d]549
6PGD-1	19.5	1	0.000	0.000	n/a[e]
6PGD-2	19.5	3	0.050	0.052	0.014
AAT-1	19.5	2	0.048	0.024	−1.000
AAT-2	19.5	2	0.000	0.009	1.000
ACO	3.8	2	0.143	0.071	−1.000
IDH	19.5	2	0.200	0.127	−0.385
LAP	19.5	2	0.019	0.020	0.048
MDH-1	19.5	1	0.000	0.000	n/a
MDH-3	19.5	1	0.000	0.000	n/a
ME7	19.5	1	0.000	0.000	n/a
PGI-1	19.5	1	0.000	0.000	n/a
PGI-2	19.5	2	0.319	0.216	−0.381
PGM	19.5	2	0.257	0.167	−0.343
SKD	15.2	2	0.000	0.000	n/a
TPI-1	19.5	2	0.236	0.135	−0.634
TPI-2	19.5	2	0.493	0.271	−0.798
UGPP	19.5	1	0.000	0.000	n/a
MEAN	18.3	1.4	0.100	0.064	−0.300

[a]Alleles per locus
[b]Observed heterozygosity
[c]Expected heterozygosity
[d]Fixation index
[e]n/a = not available due to monomorphic data

TABLE 4. Genetic difference and similarity was quantified for all pairs of populations using Nei's (1972) genetic distance

	BC	BRE	BRM	BRW	CC	CEC	COC	CUC	EC	FC
BC		0.999	0.867	0.885	0.863	0.938	0.910	0.849	0.923	0.911
BRE	0.001		0.867	0.886	0.861	0.939	0.910	0.847	0.919	0.906
BRM	0.143	0.143		0.984	0.967	0.920	0.941	0.826	0.954	0.950
BRW	0.122	0.121	0.016		0.951	0.932	0.960	0.806	0.971	0.967
CC	0.147	0.150	0.034	0.050		0.926	0.951	0.852	0.924	0.953
CEC	0.064	0.063	0.084	0.070	0.076		0.948	0.865	0.941	0.955
COC	0.095	0.094	0.061	0.041	0.050	0.053		0.849	0.951	0.955
CUC	0.164	0.166	0.191	0.215	0.160	0.145	0.163		0.836	0.823
EC	0.080	0.085	0.047	0.029	0.079	0.061	0.050	0.179		0.977
FC	0.093	0.098	0.052	0.033	0.048	0.046	0.046	0.195	0.023	
JV	0.174	0.174	0.031	0.047	0.065	0.081	0.092	0.222	0.078	0.083
KC	0.034	0.033	0.176	0.154	0.184	0.096	0.127	0.199	0.118	0.132
LP	0.134	0.135	0.032	0.019	0.064	0.052	0.059	0.227	0.033	0.039
RC	0.081	0.087	0.049	0.031	0.081	0.062	0.051	0.181	0.000	0.023
SC	0.001	0.000	0.143	0.121	0.150	0.063	0.094	0.166	0.085	0.098
SCC	0.056	0.057	0.043	0.042	0.036	0.027	0.027	0.106	0.033	0.035
SEC	0.090	0.092	0.030	0.012	0.039	0.042	0.033	0.187	0.020	0.006
SQC	0.105	0.105	0.065	0.049	0.068	0.046	0.045	0.156	0.047	0.073
STC	0.065	0.066	0.061	0.055	0.059	0.046	0.036	0.114	0.036	0.056
WG	0.086	0.087	0.016	0.031	0.053	0.057	0.051	0.135	0.029	0.055
WSC	0.035	0.033	0.137	0.115	0.186	0.107	0.099	0.207	0.081	0.132

formed one cluster, 5 populations formed a second cluster (BC, BRE, KC, SC, and WSC), and one population was distinct along the second axis (CUC). Examination of watershed, order-3 soil type, and geologic type (following Table 1) did not reveal any patterning to these groups, indicating that either the genetic diversity does not vary according to these factors or isozyme variation is insufficient to resolve correlated differences between populations.

Tests of isolation by distance revealed an atypical pattern of geographic differentiation among populations of *N. cliftonii.* Mantel tests revealed a small but significant negative correlation between geographic and genetic distance between pairs of populations (R = –0.134, P = 0.014). This pattern indicates that gene flow does not decrease as a function of geographic distance. While significant, this correlation explained only a small portion of the overall variance (R^2 = 0.018).

The unrooted population phenogram built from the raw data varied slightly in topology from the consensus tree, indicating the loci dropped from the consensus phenogram (ACO and SKD) may provide distinguishing information. The consensus topology lacked statistical support, as only 2 branches were observed in more than 50% of the bootstrap replicates (Fig. 3). The consensus phenogram (Fig. 3A) grouped 4 of the 5 populations from the PCoA cluster 2, indicating the relationship among these populations is likely robust. The raw data phenogram (Fig. 3B) resolved similar structure to the PCoA, as the populations forming cluster 2 were monophyletic.

The number of genets per population did not vary as a function of watershed or geologic soil classification, but did vary by order-3 soil type (Table 5). Visual inspection of the variation in genet number by soil type reveals that the greatest number of genets per population were observed on the Neuns family soil (category 204), the limestone containing soil (category 250), and soils classified in the Marpa–Goulding families (categories 178, 179, 180) (Fig. 4). Although these differences were significant ($F_{11,9}$ = 6.99, P = 0.003), the analysis was driven by the outlier category 204 (population STC). When category 204 was omitted from the ANOVA, the association was nonsignificant ($F_{10,9}$ = 0.82, P = 0.621). When the order-3 soil types were grouped into family classes, no significant relationship was found between soil family and genet diversity ($F_{1,19}$ = 2.70, P = 0.117). In addition, the genet diversity did not vary with population size class (small, medium or large) ($F_{2,18}$ = 1.27, P = 0.305), although smaller populations tended to contain fewer genets than larger ones (Fig. 4).

Assessment of hierarchical AMOVA revealed high levels of allele frequency variance among populations of *N. cliftonii,* but low levels among individuals and ecological groupings

(below diagonal) and genetic identity (above diagonal).

JV	KC	LP	RC	SC	SCC	SEC	SQC	STC	WG	WSC
0.840	0.966	0.875	0.922	0.999	0.945	0.914	0.901	0.937	0.917	0.966
0.840	0.967	0.873	0.917	1.000	0.945	0.912	0.900	0.936	0.917	0.967
0.969	0.839	0.969	0.953	0.867	0.957	0.971	0.937	0.941	0.984	0.872
0.954	0.857	0.982	0.970	0.886	0.959	0.988	0.952	0.947	0.970	0.891
0.937	0.832	0.938	0.922	0.861	0.965	0.962	0.934	0.943	0.948	0.831
0.923	0.908	0.950	0.940	0.939	0.973	0.959	0.955	0.955	0.944	0.898
0.912	0.880	0.942	0.950	0.910	0.973	0.968	0.956	0.964	0.950	0.906
0.801	0.819	0.797	0.835	0.847	0.899	0.829	0.855	0.893	0.874	0.813
0.925	0.888	0.967	1.000	0.919	0.968	0.980	0.954	0.965	0.971	0.922
0.920	0.877	0.962	0.977	0.906	0.966	0.994	0.930	0.945	0.947	0.876
	0.813	0.970	0.923	0.840	0.928	0.941	0.939	0.912	0.953	0.845
0.207		0.845	0.887	0.967	0.914	0.882	0.871	0.905	0.887	0.935
0.031	0.169		0.966	0.873	0.946	0.976	0.969	0.934	0.957	0.878
0.080	0.120	0.034		0.917	0.966	0.979	0.952	0.964	0.970	0.920
0.174	0.033	0.135	0.087		0.945	0.912	0.900	0.936	0.917	0.967
0.075	0.090	0.056	0.034	0.057		0.975	0.965	0.989	0.981	0.920
0.061	0.125	0.025	0.021	0.092	0.025		0.948	0.957	0.965	0.893
0.062	0.138	0.032	0.049	0.105	0.036	0.054		0.967	0.954	0.903
0.092	0.099	0.068	0.037	0.066	0.011	0.044	0.033		0.973	0.926
0.048	0.120	0.044	0.031	0.087	0.019	0.035	0.047	0.027		0.920
0.168	0.067	0.130	0.083	0.033	0.084	0.114	0.102	0.077	0.083	

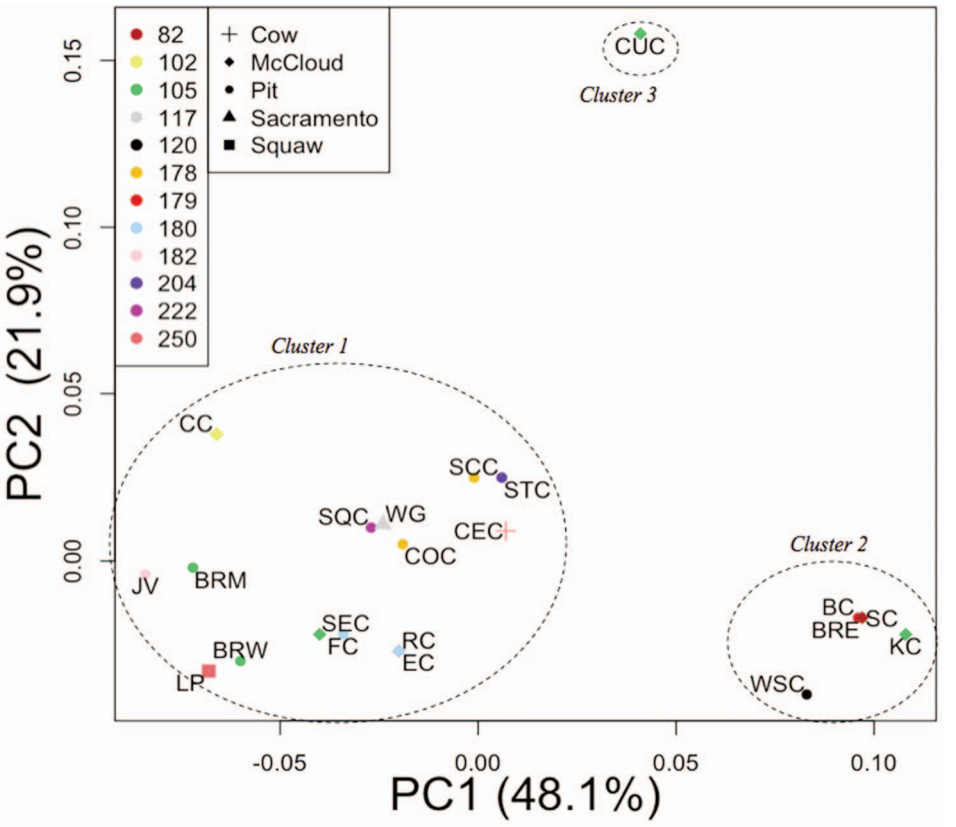

Fig. 2. Principle coordinate analysis revealed genetic differences between populations of *Neviusia cliftonii* that do not correspond to differences in order-3 soil type (symbol color) or watershed (symbol shape). Points represent population means, labeled by abbreviations given in Table 1. The percentage of genetic variance among individuals explained by each coordinate is provided on each axis.

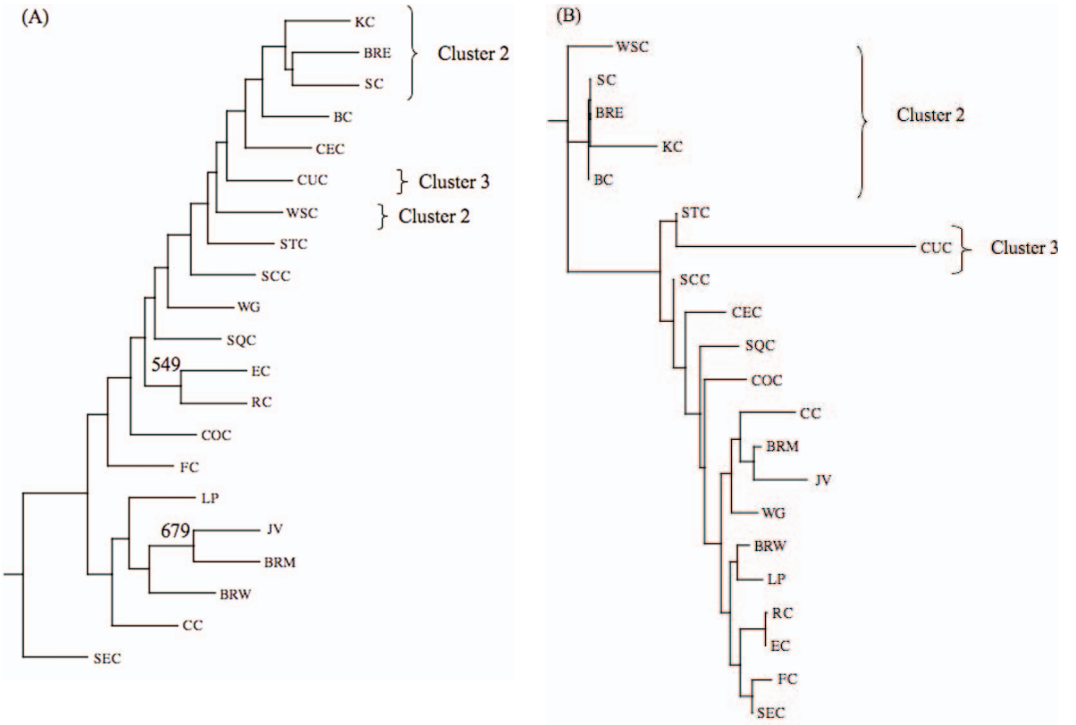

Fig. 3. Population phenograms of *Neviusia cliftonii* were poorly resolved. (A) The unrooted consensus phenogram built from 15 loci using the extended majority rule. Numbers indicate bootstrap support for that node out of 1000 replicates. (B) The unrooted phenogram built from the distance matrix based on 17 loci, with multiple populations lacking data at 2 loci. Due to missing data, bootstrap analysis was not conducted on the full data set. Populations that grouped into PCoA clusters 2 and 3 are indicated.

TABLE 5. The number of genets per population varied as a function of soil type but not with watershed or geographic soil type classifications.

Source of variance	df	MS	*F*	*P*
Watershed				
Factor	4	3.13	0.29	0.879
Residuals	16	10.75		
Order 3 soil type				
Factor	11	15.02	6.99	0.003
Residuals	9	2.15		
Order 3 family class[a]				
Factor	1	23.0	2.70	0.117
Residuals	19	8.51		
Geologic soil type				
Factor	9	6.59	0.58	0.790
Residuals	11	11.39		
Population size				
Factor	2	11.41	1.27	0.305
Residuals	18	8.99		

[a]The limestone class is dropped from this analysis, as only one order 3 soil class contributed to the higher-order family class (no. 250).

(Fig. 5). Analysis of ungrouped populations revealed that 85% of the variance occurred among populations. When populations were grouped into watersheds, 82% of the variance was observed among populations within watersheds, while only 3% of the variance was partitioned among watersheds. When populations were grouped according to order-3 soil type, 75% of the variance was partitioned among populations within soil type, while 10% of the variance was attributed among soil types. When populations were grouped by geologic type, 85% of the variance was partitioned among populations within geologic type, and no variance was observed among geologic soil types. These results indicate the greatest genetic difference occurred between populations, with moderate levels of differentiation corresponding to order-3 soil type. Given the low level of allelic variation observed in this collection, these results indicate that the rare alternate alleles are not evenly distributed across populations. When the AMOVA was repeated with populations grouped into the PCoA clusters, 11% of the variance was partitioned among individuals,

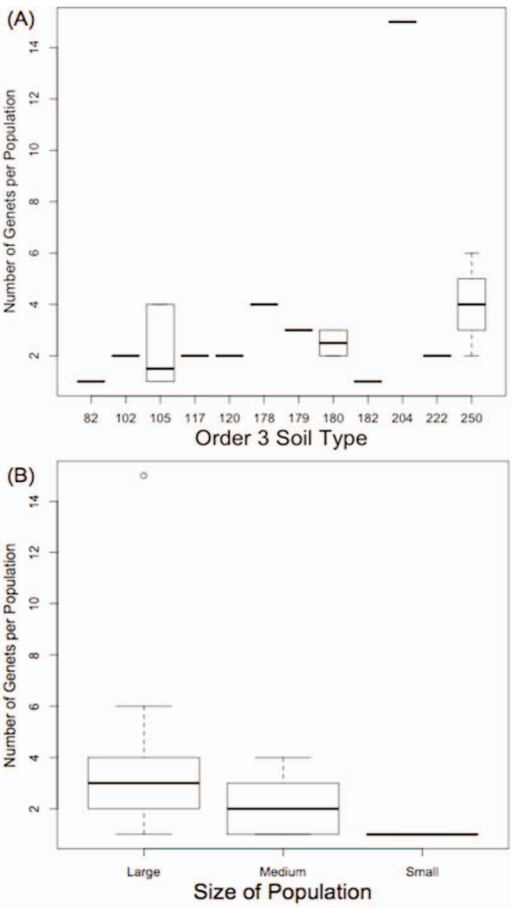

Fig. 4. Variation in the number of genets per population as a function of (A) the order-3 soil type and (B) population size. Each box represents the range of values observed at each category, with the black bar indicating the median value. Categories represented by a single population or number of genets are depicted by a single black bar.

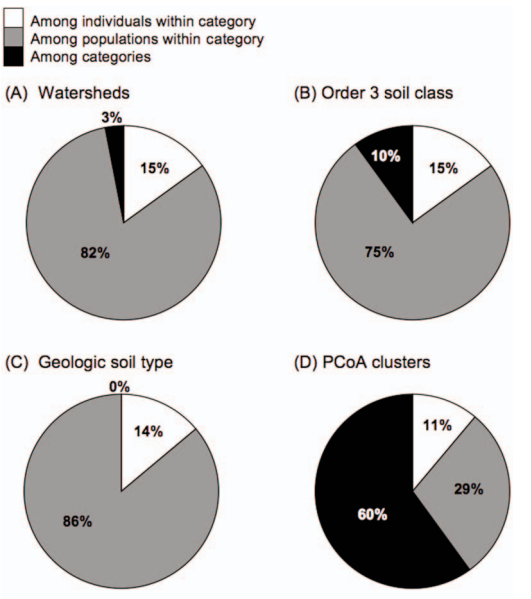

Fig. 5. Analysis of molecular variance revealed genetic variation to be greatest among populations when they were classified by (A) watershed, (B) order-3 soil type, and (C) geologic soil type. (D) When populations were grouped according to the PCoA results, differentiation was greatest among clusters.

29% among populations within clusters, and 60% among clusters, indicating the greatest genetic differentiation occurred between these 3 groups.

DISCUSSION

Low Overall Genetic Diversity in this Endemic Species

This survey of isozyme variation in the rare endemic *Neviusia cliftonii* revealed low levels of allelic and genotypic diversity. The lack of variation within many populations (only one or 2 genets identified in 57% of populations sampled) is consistent with regular vegetative reproduction of this woody species. The genet diversity is greater than that reported for the sole congener, *N. alabamensis*, which contained only one genotype per population at its marginal range (Freiley 1994). The low levels of allelic variation may be a consequence of the narrow range occupied by *N. cliftonii*, or it may be due to historic population bottlenecks. For instance, the Shasta Lake area is known as an ancient landscape, a glacial and volcanic refuge, with high numbers of endemic species (Lindstrand and Nelson 2006). The low allelic variation may be a consequence of the narrowing of the *N. cliftonii* range during the most recent glacial maximum and subsequent climate variations (Lindstrand and Nelson 2006). Alternatively, the low variation may reflect a more recent bottleneck resulting from Shasta Dam and Shasta Lake. The construction of the dam likely increased fragmentation and decreased the size of some populations, which together can change the genetic structure of populations (Honnay and Jacquemyn 2007, Aguilar et al. 2008). The low levels of genotypic variation within populations prevented statistical analysis for genetic signatures of

population bottlenecks (*sensu* Cornuet and Luikart 1996).

Much effort has been spent comparing the levels of genetic variation and differentiation in rare species compared to common taxa. In a major review of isozyme variation in plant species, Hamrick and Godt (1996) compared levels of genetic diversity and differentiation among species grouped by life history traits. For example, the size of a species' range was associated with differences in genetic variation and differentiation, with endemic species displaying lower variation and slightly greater differentiation than species with more widespread occurrences.

Other authors have suggested that a more robust approach comes from comparing levels of genetic variation in a rare species to those in congeners rather than unrelated taxa (Karron 1987, Gitzendanner and Soltis 2000). In these cases, levels of variation were correlated within genera, indicating that phylogenetic history contributed to levels of diversity in plant species (Gitzendanner and Soltis 2000). However, even when such phylogenetic comparisons are conducted, rare species tend to display lower levels of genetic variation than widespread congeners (Gitzendanner and Soltis 2000), particularly when the species are assessed in the same lab, thus controlling for technical variance (Karron 1987).

These metrics provide a context for interpretation of the *N. cliftonii* data. While the mating system and lifespan of *N. cliftonii* individuals have not been determined, the high frequency of putative multiramet clones indicates individuals are likely longer-lived perennials. The level of polymorphism (64.7%) and differentiation (85% among populations, analogous to $F_{ST} = 0.8$) observed in *N. cliftonii* is remarkably high compared with other long-lived endemic species (Hamrick and Godt 1996). The mean heterozygosity observed in *N. cliftonii* ($H_e = 0.064$) was lower than that reported in a meta-analysis ($H_{es} = 0.105$) (Hamrick and Godt 1996), likely a consequence of the low levels of allelic variation. In this case, the relatively low genetic variation and significantly high levels of population differentiation indicate gene flow is limited among populations. In addition, a negative fixation index was observed over all populations of *N. cliftonii.* This deviation from Hardy–Weinberg equilibrium may result from processes such as inbreeding depression or balancing selection and will require demographic analyses to fully explain.

Greater genetic variation was observed in *N. cliftonii* than in its single congener species, *N. alabamensis* (Freiley 1994). In the genetic study of *N. alabamensis,* only a single genet was identified per population, revealing high levels of vegetative reproduction (Freiley 1994). By any comparison, these species appear genetically depauperate when assessed by isozyme loci and may represent relict species marginally adapted to their current refugia or narrowly distributed species highly adapted to a particular habitat.

Complex Pattern of Genetic Differentiation

As revealed by the AMOVA, genetic variation is not evenly distributed among populations of *N. cliftonii.* Overall genetic differentiation was high, with 85% of the variance distributed among populations. This level is remarkable when compared to other species, though a few values of F_{ST} or G_{ST} greater than 0.8 have been reported in individual studies (Gitzendanner and Soltis 2000, Cole 2003). The differentiation observed in *N. cliftonii* was even greater than the level described in the congener *N. alabamensis* ($F_{ST} = 0.569$—Freiley 1994).

While the differentiation among populations was high, the pattern did not correspond to *a priori* categories of geographic location (watershed) or ecological factors (order-3 soil and geologic types or population size). The lack of concordance is apparent in the principle coordinate analyses, which identified 3 clusters of genetically similar populations, but revealed no pattern to the membership within clusters. Several factors may contribute to the observed pattern. First, the population structure may reflect historic processes related to the most recent glacial maximum, such as a decline in gene flow and sexual reproduction in populations as the climate changed. The lack of statistical support for the population phenogram does not allow conclusions based on the phylogenetic relationship among populations, however. Second, if natural selection is sufficient to create reproductive barriers between populations, even neutral markers such as isozymes may display significant differentiation (Storz 2005, Nosil et al. 2008, Lee and Mitchell-Olds 2011). If this "isolation by adaptation" is occurring in *N. cliftonii,* the associated adaptive trait

or ecological factor has not been identified. Third, stochastic differences in reproductive strategy (vegetative growth) or allele frequencies may have been a consequence of the Shasta Dam project, but the low level of allelic variation prohibits quantitative tests for population bottlenecks. Ultimately, examination of markers with higher levels of variation and additional demographic and ecological factors will be required to identify the evolutionary relationship among populations.

The number of genets observed in a population varied by order-3 soil type, with the single population (STC) occurring on soil category 204 (Neuns family, 60%–80% slopes) and driving the significant variation. The STC population is one of the largest of *N. cliftonii,* so the genet diversity may reflect the larger population size. Additionally, ecological factors may favor sexual rather than clonal reproduction at this location, thus maintaining higher levels of genotypic diversity. These estimates of genet diversity are likely conservative. Variation in the isozyme markers used in the study may be insufficient to fully resolve genetic individuals. Isozyme markers display variation at the protein level, not the DNA level, and have a low mutation rate compared with other marker systems (Ellstrand and Roose 1987). Thus, a DNA-based marker system could provide additional resolution of genetic differences within and among populations.

Identification of Populations of Potential Management Interest

Both the AMOVA and PCoA analyses identified 3 clusters of genetically similar populations (Figs. 2, 5). The significant differentiation observed among clusters should be considered in management and restoration activities. In combination with ecological, demographic, or phenotypic data, such genetic structure may identify management units (MUs) or ecotypes for conservation (Moritz 1994, Hedrick 2001).

More specifically, the genetic structure may be used as guidelines for germplasm collection, conservation, and restoration efforts. In order to represent the total genetic diversity in this species, samples should be taken by multiple populations in each of the 3 clusters (or the only population in the case of cluster 3). Indeed, given the low number of genets identified in this analysis (48 genotypes), it may by feasible to sample each genetic individual for conservation efforts. Restoration or population augmentation plans should maintain the genetic distinction between the 3 clusters of populations and restrict movement of plants or seed between clusters.

The lack of correlation between genetic differentiation and soil type indicates that management protocols based on differences of substrate may not accurately reflect the genetic structure of *N. cliftonii*. Investigations of demographic factors in this species should be a priority to identify processes maintaining the species' genetic structure and global rarity (Lande 1988). The putative neutral nature of the isozyme markers means that functional or morphological differences cannot be interpreted from these data.

One *N. cliftonii* population, CUC, appeared genetically distinct and formed a unique cluster (no. 3) in the PCoA analysis. This population did not contain high levels of genotypic diversity (G = 4 unique genets), but did contain a unique allele at each of 2 isozyme loci, AAT-1 and AAT-2, indicating that this population is genetically distinct. The pattern of differentiation between the large cluster 1 and smaller cluster 2 in the PCoA analysis did not reveal unique alleles, though unique alleles were observed in 3 additional populations. Population COC contained a unique allele at moderate frequency at locus 6PGD-2, population STC displayed an alternate allele at low frequency at locus LAP, and population KC was fixed for an alternate allele at locus SKD. Unfortunately, several populations did not resolve locus SKD, and several individuals from the KC samples were null at this locus, so it is possible that this alternate allele may be present at other sites. Due to these missing data, SKD was one of the loci dropped in the analysis of the consensus population phenogram, and this rare allele may contribute to the differences in topology between the raw data and consensus trees (Fig. 3).

The occurrence of genets in multiple populations (e.g., genet M in cluster 2) may be of particular conservation interest. Such a pattern may be due to insufficient variation in the isozyme markers to identify unique genets, or it may provide insight into the biology of this species. Hydrochory is an efficient dispersal mechanism of seeds, detached stems, and sprouts (DeWoody et al. 2004). Species associated with riparian areas may disperse large

distances during flooding events (Kudoh and Whigham 1997, Akimoto et al. 1998) or via other mechanisms (Honnay et al. 2010). In contrast to the typical unidirectional flow of rivers, large flooding events may result in temporary backwaters moving propagules in an upstream direction (Kofoid 1903, DeWoody et al. 2004). Given the clonal nature of *N. cliftonii*, the genetic structure may be better explained by the historic flow patterns of the Shasta Lake watershed system than by the extant distribution of populations. The remarkably high differentiation among populations is not consistent with the river providing frequent gene flow between populations, indicating that these populations do not likely form a "classical" metapopulation. Infrequent population establishment may increase the differentiation among populations, even if gene flow is widespread during disturbance events.

ACKNOWLEDGMENTS

J. Mello, R. Hernandez, and R. Hanson conducted laboratory analyses. M. Goolsby provided assistance with ArcGIS. We thank the U.S. Bureau of Reclamation Mid-Pacific Region office for their support.

LITERATURE CITED

AGUILAR, R., M. QUESADA, L. ASHWORTH, Y. HERRERIAS-DIEGO, AND J. LOBO. 2008. Genetic consequences of habitat fragmentation in plant populations: susceptible signals in plant traits and methodological approaches. Molecular Ecology 17:5177–5188.

AKIMOTO, M., Y. SHIMAMOTO, AND H. MORISHIMA. 1998. Population genetic structure of wild rice *Oryza glumaepatula* distributed in the Amazon flood area influenced by its life history traits. Molecular Ecology 7:1371–1381.

CHELIAK, W.M., AND J.A. PITEL. 1984. Techniques for starch gel electrophoresis of enzymes from forest tree species. Information Rep.PI-X-42. Petawawa National Forestry Institute, Canadian Forestry Service, Ottawa, Canada.

COLE, C.T. 2003. Genetic variation in rare and common plants. Annual Review of Ecology, Evolution, and Systematics 34:213–237.

CONKLE, M.T., P.D. HODGSKISS, L.B. NUNNALLY, AND S.C. HUNTER. 1982. Starch gel electrophoresis of conifer seeds: a laboratory manual. General Technical Report PSW-64, Pacific Southwest Forest and Range Experiment Station, USDA Forest Service, Berkeley, CA.

CORNUET, J.-M., AND G. LUIKART. 1996. Description and power analysis of two tests for detecting recent population bottlenecks from allele frequency data. Genetics 144:2001–2014.

DEVORE, M.L., S.M. MOORE, K.B. PIGG, AND W.C. WEHR. 2004. Fossil *Neviusia* leaves (Rosaceae: Kerriae) from the lower-middle Eocene of southern British Columbia. Rhodora 106:197–209.

DEWOODY, J., J.D. NASON, AND M. SMITH. 2004. Inferring demographic processes from the genetic structure of a metapopulation of *Boltonia decurrens* (Asteraceae). Conservation Genetics 5:603–617.

ELLSTRAND, N.C., AND M.L. ROOSE. 1987. Patterns of genotypic diversity in clonal plant species. American Journal of Botany 74:123–131.

FELSENSTEIN, J. 1989. PHYLIP—phylogeny inference package (version 3.2). Cladistics 5:164–166.

FREILEY, K.J. 1994. Clonal diversity patterns in marginal populations of the geographically restricted *Neviusia alabamensis* (Rosaceae). Southwestern Naturalist 39: 34–39.

GITZENDANNER, M.A., AND P.S. SOLTIS. 2000. Patterns of genetic variation in rare and widespread plant congeners. American Journal of Botany 87:783–792.

HAMRICK, J.L., AND M.J.W. GODT. 1996. Effects of life history traits on genetic diversity in plant species. Philosophical Transactions of the Royal Society B–Biological Sciences 351:1291–1298.

HEDRICK, P.W. 2001. Conservation genetics: where are we now? Trends in Ecology and Evolution 16: 629–636.

HONNAY, O., AND H. JACQUEMYN. 2007. Susceptibility of common and rare plant species to the genetic consequences of habitat fragmentation. Conservation Biology 21:823–831.

HONNAY, O., H. JACQUEMYN, K. NACKAERTS, P. BREYNE, AND K. VAN LOOY. 2010. Patterns of population genetic diversity in riparian and aquatic plant species along rivers. Journal of Biogeography 37:1730–1739.

KARRON, J.D. 1987. A comparison of levels of genetic polymorphism and self-compatibility in geographically restricted and widespread plant congeners. Evolutionary Ecology 1:47–58.

KAYE, T.N., R.J. MEINKE, J. KAGAN, S. VRILAKAS, K.L. CHAMBERS, P.F. ZIKA, AND J.K. NELSON. 1997. Patterns of rarity in the Oregon flora: implications for conservation and management. *In:* T.N. Kaye, A. Liston, R.M. Love, D.L. Luoma, R.J. Meinke, and M.V. Wilson, editors, Conservation and management of native plants and fungi. Native Plant Society of Oregon, Corvallis, OR.

KOFOID, C.A. 1903. Plankton studies IV. The plankton of the Illinois River. 1894–1899, with introductory notes upon the hydrography of the Illinois River and its basin. Part I. Quantitative investigations and general results. Illinois State Laboratory Natural History Bulletin 6:95–635.

KUDOH, H., AND D.F. WHIGHAM. 1997. Microgeographic genetic structure and gene flow in *Hibiscus moscheutos* (Malvaceae) populations. American Journal of Botany 84:1285–1293.

LANDE, R. 1988. Genetics and demography in biological conservation. Science 241:1455–1460.

LEE, C.-R., AND T. MITCHELL-OLDS. 2011. Quantifying effects of environmental and geographical factors on patterns of genetic differentiation. Molecular Ecology 20:4631–4642.

LINDSTRAND, L., III, AND J.K. NELSON. 2005. Noteworthy collections. Madroño 52:126–127.

_____. 2006. Habitat, geologic, and soil characteristics of Shasta snow-wreath (*Neviusia cliftonii*) populations. Madroño 53:65–68.

MORITZ, C. 1994. Defining 'evolutionary significant units' for conservation. Trends in Ecology and Evolution 9:373–376.

NEI, M. 1972. Genetic distance between populations. American Naturalist 106:283–292.

NOSIL, P., S.P. EGAN, AND D.J. FUNK. 2008. Heterogeneous genomic differentiation between walking-stick ecotypes: "isolation by adaptation" and multiple roles for divergent selection. Evolution 62:316–336.

PEAKALL, R., AND P.E. SMOUSE. 2006. GENALEX 6: genetic analysis in Excel. Population genetic software for teaching and research. Molecular Ecology Notes 6:288–295.

RABINOWITZ, D. 1981. Seven forms of rarity. *In:* H. Synge, editor, The biological aspects of rare plant conservation. John Wiley & Sons, New York, NY.

SHEVOCK, J.R., B. ERTTER, AND D.W. TAYLOR. 1992. *Neviusia cliftonii* (Rosaceae: Kerriaea), and intriguing new relict species from California. Novon 2: 285–289.

SILVERTOWN, J. 2008. The evolutionary maintenance of sexual reproduction: evidence from the ecological distribution of asexual reproduction in clonal plants. International Journal of Plant Sciences 169:157–168.

SPIELMAN, D., B.W. BROOK, AND R. FRANKHAM. 2004. Most species are not driven to extinction before genetic factors impact them. Proceedings of the National Academy of Sciences of the United States of America 101:15261–15264.

STORZ, J.F. 2005. Using genome scans of DNA polymorphism to infer adaptive population divergence. Molecular Ecology 14:671–688.

TAYLOR, B.L., AND A.E. DIZON. 1999. First policy then science: why a management unit based solely on genetic criteria cannot work. Molecular Ecology 8:S11–S16.

USDA FOREST SERVICE. 1983. Shasta–Trinity National Forest Order 3 Soil Survey. United States Department of Agriculture, Forest Service, Pacific Southwest Region, in cooperation with the University of California Agricultural Experiment Station, Vallejo, CA.

_____. 2004. Northern Province bedrock geology layer (ArcInfo coverage prov6bedrk). United States Department of Agriculture, Forest Service, Klamath National Forest, Yreka, CA.

WENDEL, J.F., AND N.F. WEEDEN. 1989. Visualization and interpretation of plant isozymes. *In:* D.E. Soltis and P.S. Soltis, editors, Isozymes in plant biology. Dioscorides Press, Portland, OR.

Received 17 January 2012
Accepted 26 September 2012

Appendix on page 472

APPENDIX. A total of 48 multilocus genotypes were observed in 410 samples of *Neviusia cliftonii.*

Genet label	Genotype[a,b]	Count
A	11,11,11,11,0,11,11,11,11,11,11,22,11,0,11,12,11	25
B	11,11,11,11,12,11,11,11,11,11,11,11,11,11,11,11,11	8
C	11,11,11,11,0,11,11,11,11,11,11,12,11,11,11,11,11	8
D	11,11,11,11,12,11,11,11,11,11,11,12,11,11,11,11,11	2
E	11,11,11,11,0,12,11,11,11,11,11,11,11,11,11,12,11	1
F	11,11,11,11,0,12,11,11,11,11,11,12,11,11,11,11,11	40
G	11,12,11,11,0,11,11,11,11,11,11,12,11,11,11,11,11	2
H	11,12,11,11,0,11,11,11,11,11,11,22,11,0,11,11,11	19
I	11,11,11,11,0,11,11,11,11,11,11,11,11,11,11,12,11	9
J	11,11,11,11,0,12,11,11,11,11,11,11,11,11,11,12,11	17
K	11,11,11,11,12,11,11,11,11,11,11,11,11,11,11,12,11	1
L	11,11,11,11,0,12,11,11,11,11,11,12,11,11,11,12,11	8
M	11,11,11,11,0,11,11,11,11,11,11,22,11,0,11,12,11	65
N	11,11,11,11,0,12,11,11,11,11,11,22,11,0,11,12,11	4
O	11,11,11,11,0,11,11,11,11,11,11,22,11,22,11,12,11	10
P	11,11,11,11,0,11,11,11,11,11,11,12,11,11,12,11,11	2
Q	11,11,11,11,0,11,11,11,11,11,11,12,11,11,12,12,11	4
R	11,11,11,11,12,11,11,11,11,11,11,11,12,11,11,11,11	10
S	11,11,11,11,0,11,11,11,11,11,11,22,11,11,12,12,11	10
T	11,11,12,22,0,11,11,11,11,11,11,22,11,11,12,12,11	3
U	11,11,11,11,0,11,12,11,11,11,11,22,11,11,12,11,11	3
V	11,11,11,11,0,11,12,11,11,11,11,22,11,11,12,12,11	2
W	11,11,11,11,12,12,11,11,11,11,11,11,11,11,11,11,11	8
X	11,11,11,11,12,11,11,11,11,11,11,12,11,11,11,12,11	6
Y	11,11,11,11,12,11,11,11,11,11,11,22,11,11,11,12,11	4
Z	11,11,11,11,12,11,11,11,11,11,11,12,11,11,11,22,11	5
AA	11,11,11,11,12,11,11,11,11,11,11,12,11,11,12,11,11	19
BB	11,11,11,11,12,11,11,11,11,11,11,11,11,11,11,11,11	1
CC	11,11,11,11,0,12,11,11,11,11,11,22,11,11,12,12,11	1
DD	11,11,11,11,0,11,12,11,11,11,11,22,11,11,11,11,11	1
EE	11,11,11,11,0,11,12,11,11,11,11,22,11,11,11,12,11	1
FF	11,11,11,11,0,11,22,11,11,11,11,22,11,11,12,12,11	1
GG	11,11,11,11,0,12,22,11,11,11,11,22,11,11,12,12,11	1
HH	11,11,11,11,0,11,11,11,11,11,11,22,11,0,11,12,11	1
II	11,11,11,11,0,11,11,11,11,11,11,11,12,11,11,11,11	10
JJ	11,11,11,11,11,11,11,11,11,11,11,11,12,11,11,11,11	26
KK	11,11,11,11,0,11,11,11,11,11,11,11,12,11,12,12,11	19
LL	11,11,11,11,0,12,11,11,11,11,11,11,12,11,12,12,11	27
MM	11,11,12,22,0,11,11,11,11,11,11,22,12,11,12,12,11	10
NN	11,11,11,11,12,11,11,11,11,11,11,22,12,11,11,12,11	3
OO	11,11,11,11,0,11,11,11,11,11,11,22,12,0,12,12,11	1
PP	11,11,11,11,0,11,12,11,11,11,11,12,12,11,12,11,11	1
QQ	11,11,11,11,12,11,11,11,11,11,11,12,12,11,12,11,11	1
RR	11,11,12,11,0,11,11,11,11,11,11,22,22,11,12,12,11	2
SS	11,11,12,22,0,11,11,11,11,11,11,22,22,11,12,12,11	5
TT	11,11,11,11,0,11,11,11,11,11,11,12,22,11,11,12,11	1
UU	11,11,11,11,0,11,11,11,11,11,11,12,22,11,12,11,11	1
VV	11,11,11,11,0,11,11,11,11,11,11,11,22,11,12,12,11	1

[a]Diploid genotypes are given for each locus in the following order: 6PGD-1, 6PGD-2, AAT-1, AAT-2, ACO, IDH, LAP, MDH-1, MDH-3, ME7, PGI-1, PGI-2, PGM, SKD, TPI-1, TPI-2, UGPP.
[b]0 indicates missing data.