Chapter 2

Efficient Water Allocation

Much has been written about economic efficiency and water allocation (e.g., Hartman and Seastone 1970, Howe 1971, James and Lee 1971, Water Resources Council 1983, Young 1996, and Young and Gray 1972) and about economic efficiency and optimization (Baumol 1977). In this chapter, we summarize the key issues as they relate to the optimal solution obtainable using Aquarius. Those issues include the basic assumptions of the economic efficiency paradigm and the limitations of its practical application, as well as the key strengths of an emphasis on economic efficiency. We also review what is known about the demand for water in agriculture, municipalities, industry, hydroelectric energy generation, and recreation; and discuss options for specifying monthly demand curves.

Current Water Allocation Systems

Existing water allocations have developed under systems of water rights. In the United States those rights have centered around either the Riparian or the Prior Appropriation Doctrine. The Prior Appropriation Doctrine has been prevalent in drier regions of the U.S. where there is often insufficient water to meet all use requests and where careful modeling of water storage and allocation is most necessary. Under this doctrine, water is allocated according to a time-based priority rule whereby the water available to satisfy a new application is reduced by the sum of all prior established rights. Thus, only the remaining unappropriated flow is available to satisfy new applications. In some streams, late appropriations are left with little flow, especially in drier years.

During European settlement of the Western U.S., the primary emphasis for water use was on offstream uses, most importantly farming, mining, and municipal or rural domestic uses. Later, economic development enhanced the importance of water use by industry and the production of hydroelectric energy. As streams became more fully appropriated and heavily managed, and as urban populations and values grew in importance, instream flow for recreation and habitat became another important water use (Gillilan and Brown 1997).

Date of application for a water use does not necessarily indicate a use's value. In addition, the values of the water uses may change with shifts in technology, demographics, incomes, etc. Such shifts have been dramatic during this century, leading to significant changes in the economic value of water in different uses. A time-based priority system favors early arrivals, which is not an efficiency problem if unappropriated flow is ample or, in fully appropriated rivers, if voluntary transfers among water users are obstacle free. However, a time-based allocation in a heavily appropriated river can become inefficient if, as is commonly the case with water, institutional barriers or market failures impede the voluntary transfer of rights from lower-valued to higher-valued uses.

Regardless of the process by which the existing allocation of water in a basin was established, it may be helpful to compare that allocation with an efficient allocation because: 1) such a comparison may indicate promising opportunities for private water trades; 2) where trades are hampered or precluded by institutional barriers, the comparison may indicate areas where institutional reforms may allow for a more efficient water allocation; and 3) where past water developments were publicly financed, the comparison may indicate directions that the public entity should consider to increase the efficiency of the public project. Also, when considering a new publicly-financed water development, the opportunities for the project to increase the efficiency of water allocation should be carefully analyzed.

Economic Efficiency

Two fundamental economic concepts are efficiency and equity. Economic efficiency is concerned with the aggregate wealth generated in a society; economic efficiency is improved if aggregate wealth increases. Equity is concerned with the fairness of the distribution of that wealth; equity is improved if fairness increases. Economic efficiency is subject to technical evaluation, given the assumptions of the dominant (neoclassical) economic model. Equity is not subject to technical evaluation within the neoclassical model. Therefore, regarding equity, the role of economics within this theoretical model is to indicate the effect of a policy on income distribution so that equity can be considered in the political arena.

Three assumptions of the neoclassical economic model are particularly relevant. The first is that, for the purpose of evaluating economic efficiency, the existing income distribution is accepted as given. This is important if a different and more acceptable income distribution would result in different demand and supply schedules, and thus in different prices for goods and services. Acceptance of the existing income distribution is justifiable in a democracy because the income distribution is, to a large extent, a matter of public policy.

The second assumption is that consumers are the best judges of their welfare; thus, the values that individuals assign to goods and services are unquestioned. This consumer sovereignty assumption is not fully met, if for no other reason than that consumers often lack accurate information. However, in a democratic society, consumer sovereignty is not an unreasonable premise upon which to base resource allocation. Establishment of a democracy is, in a sense, a repudiation of allowing a select few to control resource flows.

The third assumption is that impacts outside the boundary of the analysis can be ignored. In water resource literature, the boundary of the analysis has been called the "accounting stance." The accounting stance separates the geographic or demographic area of concern from that which is ignored. This choice of boundary is important because it can determine whether a particular benefit or cost is relevant to the analysis. For example, effluent that lowers downstream water quality is ignored if the downstream area is beyond the boundary of the analysis. Typically, the accounting stance coincides with the administrative responsibility of the entity performing the analysis, but might be restricted by such things as data availability or the capacity of an analysis tool.

If benefits and costs occur at different points in time and the timing of their occurrence matters, the efficiency criterion must account for time. The traditional approach to this problem is to compute a present value (PV). An allocation of resources across the total number of time periods (*np*) is efficient if it maximizes the PV of net benefits that could be received from all the possible ways of allocating those resources over the *np* periods. Mathematically, this is accomplished by evaluating the discounted algebraic sum of a stream of benefits minus costs over the life of the project or period of analysis, as follows:

$$PV[r] = \sum_{i=0}^{np} \frac{(B_i - C_i)}{(1 + r)^i} \tag{2.1}$$

where B_i is the benefit and C_i is the cost in period *i*, *np* indicates the total period of analysis, and *r* is the discount rate. Choice of the discount rate may depend on the opportunity cost of capital and can include a risk adjustment. Typically *r* is below 0.1. If the future will not be discounted, *r* is set to zero. The current version of Aquarius does not compute discounted benefits, although provisions have been made in the model for its future implementation. In what follows, we assume a zero discount rate.

It is important to recognize the distinction between economic and financial efficiency. Financial efficiency is concerned only with money flows. From this standpoint, a good or service is of value only if money changes hands when it is exchanged or consumed. Economic efficiency is concerned with all goods and services valued by the public regardless of whether consumption is accompanied by monetary exchange. Financial efficiency is improved if net financial return increases. Economic efficiency is improved if the net wealth of society increases. For example, additional instream recreation opportunities available without cost to users are ignored from the standpoint of financial efficiency but are relevant to economic efficiency if recreationists would be willing to pay for the opportunities if they had to pay to use them. Financial efficiency is a primary concern of private firms and corporations but may also be of interest to governments evaluating their cash flow for budgetary purposes. Economic efficiency is typically a primary concern of governments or organizations charged with administration of public welfare.

Aquarius can be used to evaluate either financial or economic efficiency. The key differences between evaluating financial and economic efficiency are which water uses are included and how the values of those uses are characterized. Financial efficiency may ignore some uses that are relevant to economic efficiency. The value of a water use to a business is often a constant return per unit reflecting a market or negotiated price, which is usually represented by a horizontal demand curve. The value of a water use to society may change depending on the amount of water use at issue and is usually represented by a sloped demand curve. In the following, we focus on the more complex situation of sloped demand curves.

Economic efficiency is maximized when the sum of benefits minus costs from the various outputs is as high as possible given people's values—as expressed by their willingness to pay or willingness to accept compensation—and the physical constraints of the system (the production functions). In the remainder of this chapter, we assume that costs are nil and that water uses are independent (i.e., willingness to pay for a particular water use is independent of willingness to pay for other uses). We also assume a Marshallian demand function rather than the more precise Hicksian (income compensated) demand function. A Marshallian demand function will closely approximate its Hicksian equivalent if income effects are small (Willig 1976). Income effects should be small where the good at issue is a very small portion of the total purchases of the individual, as is generally the case with water.

Given these simplifications, P is price (i.e., marginal willingness to pay) and x is level of output in the following demand (i.e., marginal benefit) function: $P = f(x)$. With demand functions for the various water uses (j), the total benefit function (TB) to be maximized over the various time periods (i) is:

$$TB = \sum_{i=1}^{np} \sum_{j=1}^{nu} \int_0^{a_{ij}} f_{ij}(x_{ij})\, dx_{ij} \tag{2.2}$$

where: np = total number of time periods
nu = total number of water uses
a = level of consumption.

TB is maximized when a_{ij} are set so that the Ps are equal for all i and j. In other words, total benefits are maximized when the levels of consumption are such that the marginal benefits for each use across all uses and time periods are equal. TB can only be maximized over the j uses for which marginal benefit functions are specified. If relevant uses are omitted because their benefit functions cannot be specified, they must be represented in some other way such as by adding a physical constraint to the model.

Economic Demand Functions

In subsequent sections we report on past attempts to estimate demand functions for the various water uses included in Aquarius. In this section we review some general concepts.

Demand functions are not easily estimated from market data. At any one time, all that is observed is one point along the demand function, which is one price-quantity combination among a large number of combinations that could be observed under different conditions. However, by various techniques, including observation of different real-world markets containing similar people in different supply situations, economists have learned about demand functions. Typically they find that as the price decreases the quantity consumed increases, yielding a downward sloping

demand function (figure 2.1). Further, although it is common in economics text books to illustrate demand functions using straight lines (figure 2.1a), most actual market demand functions are probably nonlinear. Of course, short portions of any demand curve can be approximated by a straight line.

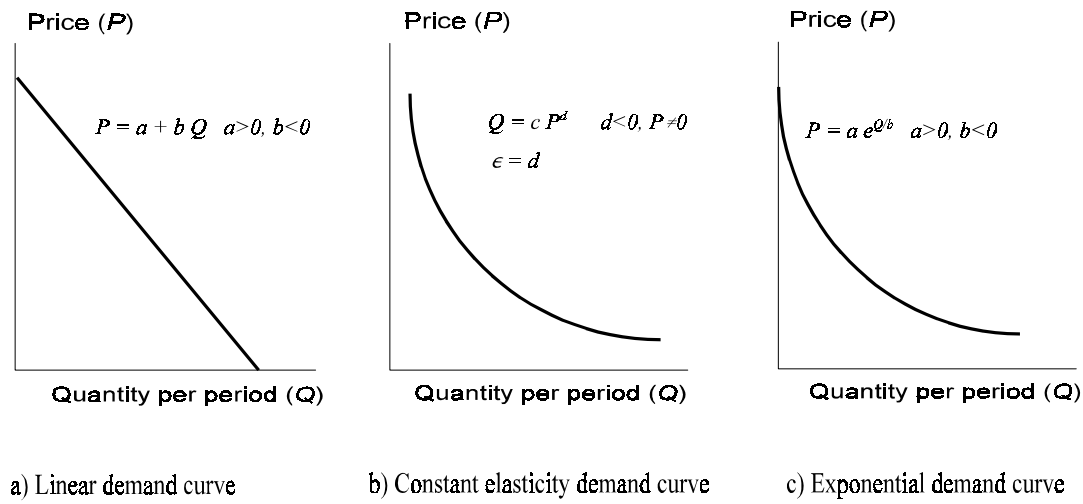

Figure 2.1 Demand curve examples.

It is common to describe a point along a demand function in terms of its price elasticity of demand (hereafter just "elasticity" or ϵ), which expresses the percentage change in quantity demanded for a percentage change in price. At a point along the curve, $\epsilon = \partial Q/Q \,/\, \partial P/P$ where Q is quantity demanded and P is price. For a downward sloping curve, an $\epsilon < -1$ is "elastic," and an $\epsilon > -1$ is "inelastic." The special case of $\epsilon = -1$ is "unit elasticity." A linear downward sloping demand curve is elastic in the upper left and inelastic in the lower right, with a point of unit elasticity in between. A constant elasticity downward sloping demand curve is convex to the origin (figure 2.1b), and undefined at a zero price. Such a curve is represented by a power function such as $Q = c\,P^d$ with $c > 0$ and $d < 0$. The exponent on price d is equal to ϵ.

A demand curve in power form can be estimated by knowing ϵ and one price-quantity point along the curve. Because the curve does not cross either axis, the ends of the curve may be very sensitive to values of the particular point specified. An attractive alternative to the power function is the exponential function $Q = g\,e^{P/h}$, with $g > 0$ and $h < 0$. Note that in Aquarius, when specifying exponential functions, we have adopted the convention of expressing the coefficient in the exponent in its reciprocal form. This avoids strings of 0s when the exponent is very small, as it often is. Also, in Aquarius the minus sign is assumed when the user enters the coefficient in the exponent. An exponential function can approximate a power function and has the additional feature that the curve crosses an axis. The demand function $Q = g\,e^{P/h}$ allows the demand curve to cross the quantity axis, indicating that satiation is reached. The inverse demand function $P = a\,e^{Q/b}$ with a

> 0 and $b < 0$, allows the curve to intercept the price axis indicating that consumption ceases if the price is high enough (figure 2.1c). Elasticity varies along an exponential function. The exponential function can be estimated by knowing two points along the curve. One point that may be known, or at least more easily assumed than others, is the price at which quantity demanded falls to zero. Call this price $P_{Q=0}$. Another convenient point is given by the quantity at which price equals the existing price P_e, call it $Q_{P=Pe}$. Given these two points, the intercept $a = P_{Q=0}$ and the exponent $b = Q_{P=Pe}/[ln(P_e) - ln(P_{Q=0})]$ of the inverse demand function $P = a\, e^{Q/b}$.

The two-point approach to estimating an exponential function fails to use information about elasticity of demand that may be available for at least one point along the demand curve. Aquarius includes a computational tool to estimate the coefficients of the exponential function knowing two points and the elasticity at one of those two points. The tool uses a weighted least-square method to minimize the sum of squares of deviations of the observed points and elasticity from those of the fitted function. See Appendix B for details.

It is important to distinguish between demand for water in general and demand for water from the particular source being modeled. For example, demand for the first increments of residential water is extremely high. Thus, a demand curve for residential water in general might intersect the price axis at a very high price. However, residential water from a particular source may have alternative, though more costly, sources. The cost of the next most costly source would truncate the demand curve for the particular source at issue at a price equal to that cost. Whenever an alternative source exists, its cost can serve as an estimate of $P_{Q=0}$.

When comparing demand functions for water in different uses it is important that each demand function be for raw water. For example, it would be incorrect to compare demand for raw water in irrigation with demand for treated and delivered water in residential use. The latter estimates of willingness to pay would include the cost of treatment and delivery whereas the former would not. If the process of estimating a demand function for a particular water use focuses on treated and delivered water, treatment and delivery costs must be subtracted from the estimated willingness to pay to yield demand for raw water.

For offstream water uses that do not completely consume the diverted water, such as most agricultural and municipal withdrawals, the quantity variable in a water demand function must be chosen to correspond with the way diversions are being modeled. Sometimes in modeling water allocation, only the consumptive use amount is modeled; that is, withdrawal is set equal to the consumptive use and return flow is thereby ignored. This is a viable procedure if actual return flows reach the stream upstream of the next downstream diversion point of the model. In this case, consumptive use is the appropriate quantity variable for the water demand function. A more accurate characterization of water movement in a river basin is achieved by explicitly modeling return flows and specifying the point where they reach the water course. In this case, withdrawal is the appropriate quantity variable. Either way, consumptive use includes actual evapotranspiration at the location of use plus any other losses along the delivery and return paths.

In a well functioning water market, the marginal value of raw water is equal across uses. This equality occurs because, if marginal values differ, the higher-valued use can afford to purchase water from a lower-valued use, paying a price that exceeds the water's value in the lower-valued use. Transfers from lower-valued to higher-valued uses continue until the advantages of trade are eliminated, that is, until marginal values are equal and an optimal allocation is reached. Equality of value at the margin does not indicate equality of value over the full extent of the demand curve. Indeed, the value of the initial units of water to residences or the industry is greater than it is to irrigated agriculture. However, in the absence of institutional barriers to trade or significant transaction costs, actual marginal raw water deliveries to each water use will occur at the point of equal marginal value.

Markets in the real world rarely perform as smoothly as they do in theory. Water transfers are often constrained by institutional barriers such as contractual agreements attached to publicly funded storage and delivery projects that preclude sale to unauthorized uses, or by the lack of legal recognition of some water uses such as habitat maintenance. Water transfers are also typically impeded by significant transaction costs such as those associated with quantifying and legally defending return flow amounts. Institutional barriers and transaction costs may keep marginal values of water in different uses from reaching equality, requiring separate valuation efforts to estimate the current marginal values of water in different uses.

In the following sections, we present information that will facilitate use of Aquarius including: 1) evidence on the shape of the annual demand curve; 2) detail on placing the annual demand curve in realistic price-quantity space; 3) information on the difference between demand for treated and delivered water and demand for raw water; and 4) information on disaggregating annual demand to the monthly time step. Prices from studies performed over the past twenty years or so are reported. We have, unless stated otherwise, adjusted for inflation by updating these prices to 1995 dollars using the Gross Domestic Product (GDP) implicit price deflator.

Irrigation Water Use

Irrigation in the United States accounts for 42 percent of fresh water withdrawals and 83 percent of consumptive use (table 2.1). In the 12 most western contiguous states, 82 percent of withdrawals and 92 percent of consumptive use is for agriculture. In some states, such as Colorado, irrigation plays an even more important role (table 2.1).

The most direct approach to estimating the demand for irrigation water is to observe market transactions where water rights are purchased by farmers in a competitive water market. Such transactions, however, seldom occur. Although farmers in some parts of the West commonly sell water rights to municipal and industrial water users, and sometimes do so in relatively competitive markets, instances of open market water purchase by farmers are rare.

Lacking a direct measure of farmers' demand for irrigation water, economists have focused on water's role as an agricultural input. This role affects two end products that are commonly sold in competitive markets; farm land and farm produce. Thus, water demand schedules are derived by estimating the contribution of irrigation water towards either the value of irrigated farms or the value of farm produce. The viability of these approaches rests on the degree to which the end products and inputs, other than raw water, are competitively priced. Subsidies and other impediments to the free working of markets can alter prices to such an extent that the estimated water price reflects market manipulation or control rather than resource demand and scarcity. Although the competitive market requirements are rarely met completely, they have been met to a sufficient degree to sustain, over the past 40 years or so, numerous studies of the value irrigation water.

Table 2.1 Water use in the United States in 1985 for the major consumptive use types in millions of gallons per day, with percent of total use in parentheses.[a]

	United States		Western States[b]		Colorado	
			Withdrawal			
Residential	24,300	(7)	8,813	(7)	743	(4)
Commercial	6,940	(2)	2,068	(2)	120	(1)
Industrial	28,100	(9)	3,958	(3)	128	(1)
Thermoelectric	131,000	(40)	8,840	(7)	123	(1)
Irrigation	137,000	(42)	111,610	(82)	12,400	(94)
			Consumptive Use			
Residential	5,680	(6)	2,714	(5)	145	(3)
Commercial	1,190	(1)	501	(1)	21	(0)
Industrial	4,200	(5)	1,083	(2)	28	(1)
Thermoelectric	4,350	(5)	525	(1)	37	(1)
Irrigation	73,800	(83)	55,090	(92)	4,570	(95)

[a] Source: Solley et al. (1988). Fresh water only, surface plus ground water. Ignores mining and livestock water use. Percent columns may not add to 100 because of independent rounding.

[b] Includes Arizona, California, Colorado, Idaho, Montana, Nevada, New Mexico, Oregon, Texas, Utah, Washington, and Wyoming.

Shape of the Annual Demand Curve for Irrigation Water

Because irrigation water attached to farm land contributes to the land's value, multivariate statistical methods can be used to isolate that contribution. This "hedonic" or "property value" method requires a data set of farm sales that includes sale price and all the characteristics that contribute to the farms' value. The coefficient on the irrigation water availability characteristic

indicates the water's average per-farm value. Early studies using the hedonic method to valueirrigation water include Milliman (1959), Hartman and Anderson (1962), and Knetsch (1964). Torell et al. (1990) used this approach with data from over 7,000 farm sales in five Western states to compute the present value of the average acre-foot of ground-water available for irrigation, which was about $5 for the study area as a whole. This approach yields only a point estimate of the value of water, not an entire demand curve.

More common are studies that estimate the contribution of irrigation water to farm produce. Three approaches have been used, the: 1) production approach, 2) programming approach, and 3) econometric approach. The production approach involves observing the effect of irrigation on the production of specific crops. This approach has two variants. One uses data from working farms and involves comparing production on irrigated fields with production on nonirrigated fields, where other inputs—soils, rainfall, management, etc.—are roughly the same on the two sets of fields. This approach yields a point estimate of the value of irrigation water. For an example, see Duffield et al. (1992, p. 2179). The other variant involves controlled studies at experimental farms where the effect of water on the production of specific crops is carefully observed. Two such studies are Ayer and Hoyt (1981) in Arizona and Kelly and Ayer (1982) in California. These studies estimate production functions expressing the input-output relation between water and crop production and then infer the value of the water input from the market value of the crop. Both studies reported that water demand was inelastic for most crops studied over water prices as high as $100/acre-ft (most elasticities were greater than –0.5). However, such studies are limited by the combinations of other inputs that the experimental plots were able to incorporate, allowing for the possibility of more elastic demand in the long-term (i.e., when all inputs can be adjusted with more flexibility than they were at the experimental plots). This approach yields demand estimates for individual crops, not for entire multi-crop farms or for multi-farm regions.

With the programming approach, farmers' production options and input and output prices are expressed in matrices of linear or quadratic problems. Optimal production decisions are determined via solution of the corresponding programming problems. This approach is typically applied to individual representative farms. The results of such runs may be extrapolated to model efficient allocations across all the farm land in a given agricultural region. Water demand functions are typically estimated using this approach by solving for irrigation water input under different assumed water prices (yielding estimates of quantity demanded) or assumed water availability (yielding estimates of marginal water value). With enough different solutions, a water demand curve is plotted giving the maximum amount farmers in the region could pay for increments in irrigation water.

Some studies using the programming approach have presented stepped demand functions showing the values of discrete quantities of water that would be used by a farm or by all the farms in the given agricultural region. Each step along the curve represents a different crop or the same crop in a different situation (e.g., on a different soil). Typically these stepped demand schedules indicate a nonlinear water demand function, one stepper in the upper left than in the lower right (Anderson et al. 1973, Bernardo et al. 1987, Bowen and Young 1985, Kelso et al.

1973, and Kulshreshtha and Tewari 1991), but sometimes they show a stepped function that approximates a linear curve (Gisser 1970, Taylor and Young 1995). Figure 2.2 is an example of a stepped demand function. This function is more accurately expressed as an exponential function than as a power function. A regression yields the following inverse demand function: $P = 140\ e^{-Q/166,667}$ ($r^2 = 0.63$). The corresponding power function has an r^2 of 0.44.

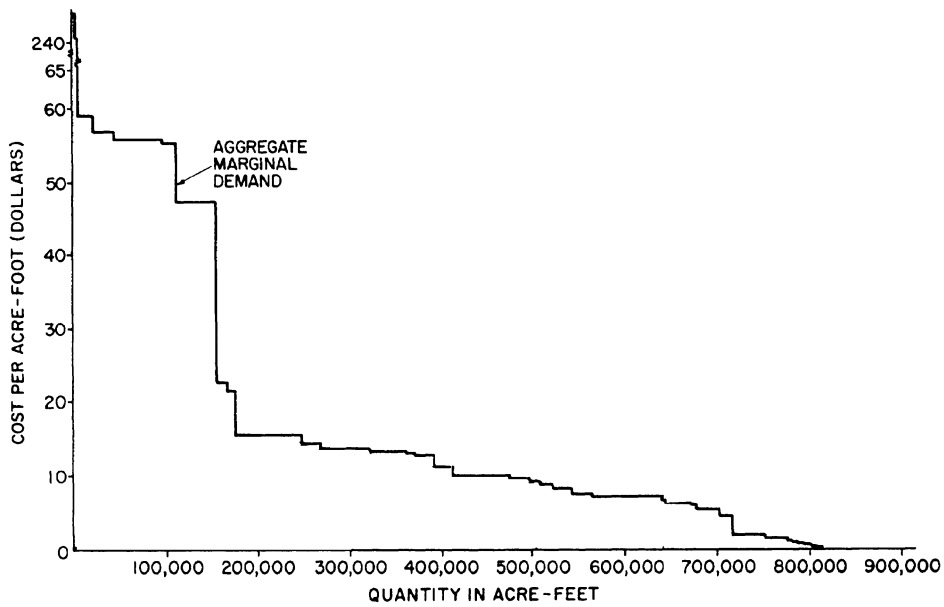

Figure 2.2 Derived marginal demand for irrigation water (from Kelso et al. 1973, figure 4-11).

The convex shape (to the origin) of the demand function estimated by many programming studies reflects the fact that feed grain and forage crops typically occupy most of the irrigated acreage and yield less profit per acre-foot of water applied than do the more highly valued, small acreage, fruit and vegetable crops. Thus, the feed grain and forage crops occupy the lower right portion of the demand curve and the fruit and vegetable crops occupy the upper left portion. The exact shape of the curve in a given area depends on which crops are planted in that area, which will in turn depend on physical variables, like the weather and soil, and on prices of inputs and outputs.

Other programming studies plot smooth curves through the price-quantity points determined in model solutions or report equations that represent such points. For example, Heady et al. (1973) used a large scale interregional model of U.S. agriculture to derive a linear demand curve for irrigation in the Western U.S. The model allowed for substitution of dry land farming for irrigated farming as the price of irrigation water was increased. Howitt et al. (1980) studied irrigation in California and produced discrete price-quantity points that very closely traced out a demand curve convex to the origin. Vaux and Howitt (1984) later used this curve to estimate demand functions for irrigation in northern and southern California expressed in the form:

$Q = j + k P^{0.5}$, where Q = quantity and P = price, with $j > 0$ and $k < 0$. In contrast, based on the work of Moore et al. (1974), Vaux and Howitt (1984) adopted a downward sloping linear demand curve for irrigation water demand in California's Imperial Valley. Recently, Booker and Young (1994) adapted earlier programming studies of agriculture in the Upper Colorado River Basin to express agricultural profit as a second degree polynomial of water input that, when used to derive water demand, yields a demand function accurately represented by the power function $Q = c P^{-0.66}$, with $c > 0$. The Vaux and Howitt (1984) and Booker and Young (1994) studies both showed downward sloping demand functions that were convex to the origin.

The econometric approach has been applied with cross-sectional data representing a large geographical area over which water costs, perhaps because of pumping depths or application rates, vary substantially. For example, studies by Moore et al. (1994), Ogg and Gollehon (1989), and Frank and Beattie (1979) each used data from several Western U.S. states. Ogg and Gollehon regressed water use on water price variables using three different functional forms. The most successful model used a power function, yielding an irrigation water demand function that is convex to the origin, with a constant elasticity of –0.26. Frank and Beattie assumed a power function and regressed the value of agricultural production on a set of explanatory variables. They found elasticities of demand for irrigation water from –1.0 to –1.5 depending on the geographical region. Using data from seven Texas counties, Nieswiadomy (1985) regressed groundwater pumping on explanatory variables including pumping cost and compared linear and log-log (i.e., power) functional forms. The functional forms differed little in their ability to explain variance in the pumping rate. The log-log coefficient on pump cost, equivalent to the elasticity of demand, was –0.8.

All past studies of demand for irrigation water found a downward sloping demand curve. Nearly all programming studies found a nonlinear demand curve, one convex to the origin. These curves were inelastic, with ϵ generally greater than –0.3 at low water prices and elastic at high water prices (table 2.2), and can be approximated by an exponential function. Of the studies that fitted smooth curves to these results, Vaux and Howitt (1984) used nonlinear and linear functions and Booker and Young (1994) presented a profit function that yielded a demand function that we most accurately expressed in an equation in power form. The econometric studies generally either assume a power function—a common practice in economic studies partly because the exponent on price in a demand function is equal to the price elasticity—or find upon comparison that such a function performs better in terms of explained variance.

Table 2.2 Characteristics of estimated multi-crop water demand functions for the Western United States.

Author	Location	Method	Elasticity[a] Min[b]	Max[b]
Anderson et al. (1973)	Utah	Programming	-0.01	-7.0
Bernardo et al. (1987)	Washington	Programming	-0.14	-0.4
Booker & Young (1994)	Colorado	Programming	-0.6	-0.6
Frank & Beattie (1979)	Western U.S.	Econometric	-1.1	-1.1
Gisser (1970)	New Mexico	Programming	-0.17	-3.0
Heady et al. (1973)	Western U.S.	Programming	-0.36	-1.5
Howitt et al. (1980)	California	Programming	-0.46	-1.5
Kelso et al. (1973)	Arizona	Programming	-0.09	-1.2
Kulshreshtha & Tewari (1991)	Saskatchewan	Programming	-0.05	-3.1
Ogg et al. (1989)	Western U.S.	Econometric	-0.26	-0.26
Vaux & Howitt (1984)	California	Programming	-0.1	-10.

[a] Elasticities are arc or point and may be as reported in the original paper or computed from information presented in the paper. Entries are approximate and may represent a compromise between several estimates presented in the original paper.
[b] The minimum and maximum values of irrigation water reported for the estimated demand function.

Representative Annual Irrigation Water Demand Curve

The amount of irrigation water diverted in a given farming area depends on many factors. If water is not limited it will be diverted up to the point where its marginal value equals the farmer's marginal cost of acquiring and applying the water. Where water limitations keep irrigation below the level at which marginal value equals marginal cost, the demand curve is truncated by the resource constraint. In any case, as the price of water increases, water use per acre may drop somewhat, but the main change will probably be a reduction in the number of acres irrigated as acres are converted to dry land crops or removed from production. Therefore, the quantity axis of the demand curve cannot be expressed on a quantity per-acre basis, unlike the demand curve for residential water, which can be expressed on a quantity per-capita basis, as every person needs some water. The appropriate variable for the quantity axis is water volume per year for the entire agricultural area.

Ideally, the demand curve for the agricultural area(s) to be included in a river basin water allocation model should be carefully derived. However, where a demand curve has not been derived, an approximation can be achieved by adopting a functional form and knowing one or two points along the curve. Assuming an exponential form, two points are needed such as $P_{Q=0}$ and $Q_{P=Pe}$. To provide rough estimates of these points, various papers were examined. The prices at the upper left of the demand curves (approximating $P_{Q=0}$) varied from under $100 to over

$200/acre-ft. The estimated maximum prices depend on whether high-value fruits and vegetables are grown in the area and whether the study included those crops when estimating the demand curve. The quantity demanded at the existing marginal price ($Q_{P=Pe}$) will vary with the acreage available for planting, soil type, weather (principally temperature and precipitation), method of application (flood versus spray), etc. Existing prices are typically from $5 to $15/acre-ft for surface water delivered via gravity but may vary more widely if pumped. The following studies reported ground water pumping costs: Ogg and Gollehon (1989) described costs from $54 to $102/acre-ft across the West; Moore et al. (1994) reported costs ranging from $25 to $32 across the West; and Nieswiadomy (1985) related a cost of about $7 for areas of Texas. These prices should correspond to withdrawals per acre across the West that, according to Solley et al. (1988, table 7), vary from 1.22 acre-ft on average in the Texas-Gulf region to 5.54 acre-ft on average in the Upper Colorado region. For comparison, the weighted mean fresh water agricultural withdrawal over the nine Western water resource regions was 2.94 acre-ft/acre (Solley et al. 1988).

Because there is considerable variety across the West, some knowledge of local conditions is needed to estimate $P_{Q=0}$, P_e and $Q_{P=Pe}$. But to provide an example, assume an exponential functional form, where $P_{Q=0}$ = $150, P_e = $15, an irrigated area of 10,000 acres, and existing annual withdrawals of 3 acre-ft/acre. Using these assumptions, the annual inverse demand function is $P = 150\ e^{-Q/13,000}$.

Demand for Raw Water

The cost of irrigating crops includes the expense of delivering water to the farm and applying it to the crops. Demand for raw water is estimated net of delivery and application costs. One approach to estimating the demand curve for raw water is to subtract delivery and application costs from willingness to pay for delivered and applied water.

Delivery costs for gravity fed water are mainly the expense of constructing, maintaining, and operating dams and canals. In most gravity fed irrigation areas, these functions are performed by an association, such as an irrigation district, which charges individual farmers a fixed assessment fee per unit of water owned to cover the association's costs. Thus, the assessment fee approximates the amortized average cost of storing and delivering the water. Such fees typically vary from $5 to $15/acre-ft. (A further complication, when evaluating economic efficiency, is the effect of government subsidies on the values of agricultural products and the costs of agricultural inputs. Many of the West's dams and canal systems have been publicly subsidized to some extent.) Delivery costs for pumped water are largely the pumping expense. Marginal pumping cost is a function of energy cost, which is typically constant for an individual farmer.

Application costs vary by method. These costs may include fixed costs, such as for field leveling, installing ditches, and installing sprinkler equipment, and variable costs such as for hand moving of syphons or sprinkler heads and maintaining ditches or sprinkler equipment.

Monthly Distribution of Annual Demand

Farmers make water use decisions at various times. In the long run, all factors of production under the farmer's control are variable. For example, the choice of whether to install a sprinkle irrigation system is variable in the long run. Annual decisions (intermediate run) focus largely on what to plant given expected prices and water availability. Monthly decisions (short run) usually focus on responding to recent changes in prices and weather patterns. Daily decisions (very short run) might focus on how much water to apply to a specific field given existing moisture conditions. Decisions about the purchase of water rights or drilling a well are long or intermediate run decisions; decisions about rental of a water right (i.e., purchase of water for one-time use) are intermediate- or short-run decisions; and decisions about when to irrigate are short-run or very short-run decisions.

Farmers have more flexibility to make input substitutions in the long run than in the short run. Thus, responsiveness to water price decreases as the planning horizon shortens. The demand curve for water depends partly on the degree of flexibility to make substitutions; thus, demand curves may vary with length of run. Most studies of agricultural water demand mentioned above used methods and data corresponding to intermediate- or long-run planning, so their results apply to an annual or longer planning horizon. We are not aware of any studies that estimate monthly demand curves. So the question becomes, how to disaggregate an annual demand curve to the monthly time step.

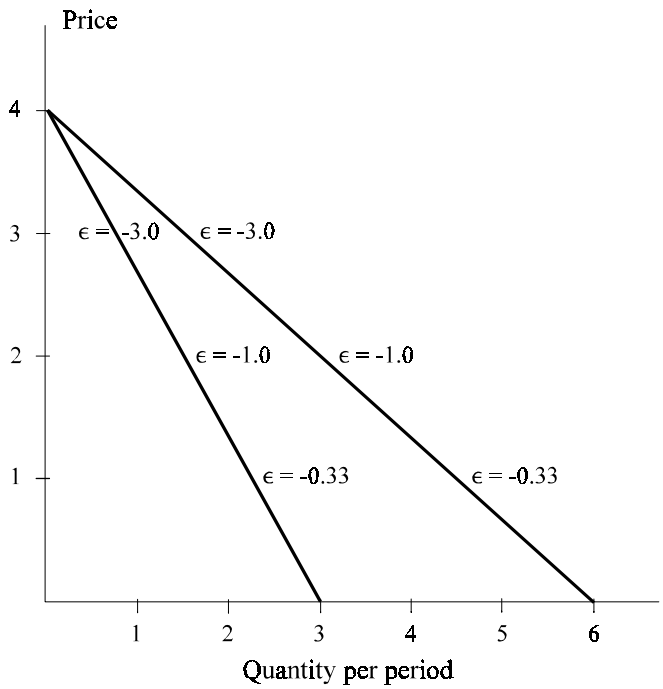

Figure 2.3 Disaggregation of an annual demand curve.

Perhaps the most direct approach is to disaggregate horizontally the annual quantity demanded among the irrigation months following the typical monthly distribution of annual water needs for the area. For example, assume a linear annual demand curve for water as depicted by the right-hand line in figure 2.3, in a region where irrigation occurs during only two months, which each receive exactly half of the annual irrigation amount. In this case, the left-hand line depicts demand for each of the two months.

Table 2.3 shows the monthly breakdowns of annual irrigation for two large basins in the West. The monthly distribution of annual irrigation demand depends largely on the weather and on whether double cropping is practiced, which also depends on the weather. As table 2.3 indicates, irrigated farming occurs year-round in the Lower Colorado Basin, which includes the desert areas of Arizona and California but not the cooler Upper Basin. A limitation of this approach is that it holds the maximum price, which is the intersection at the price axis, constant for all months at the level set by the annual demand curve, when in fact the farmer might be willing to pay more or less in some months. For example, because in a given month flexibility is limited to substitute among inputs, a farmer might be willing to pay more for initial water quantities than the annual demand curve indicates. Another limitation is that the assumption of constant monthly proportions of annual water use precludes the possibility of adjusting the use among months in response to existing moisture conditions. Nevertheless, given the lack of estimated monthly demand functions and of data on how irrigation responds to natural moisture changes, the constant proportion disaggregation approach is probably the most viable.

Table 2.3 Monthly allocation of annual irrigation withdrawals (in percent). [a]

	Colorado Basin[b]	
	Upper	Lower
January	0	4
February	0	7
March	0	9
April	4	10
May	23	10
June	35	11
July	23	12
August	12	11
September	3	9
October	0	7
November	0	5
December	0	4

[a] Source: U.S. Bureau of Reclamation (1986).
[b] Columns may not sum to 100 because of rounding.

Municipal Water Use

Distinctions among types of municipal and industrial (M&I) uses are unclear in the economic literature. Some studies of "residential" or "domestic" demand use data from a sample of individual households and are clearly residential demand studies. Others use aggregated data from water providers that include deliveries to commercial, and possibly some industrial users, although the bulk of the deliveries are to residential users. In these studies, the terms "community", "municipal" and "residential" are used inconsistently. In the following, "residential" and "municipal" studies are together except when the "municipal" studies present separate estimates for nonresidential users. Commercial use is presented separately. Industrial use is covered in the next section.

Residential water use in the U.S. is 7 percent of the total water withdrawal; commercial water use is an additional 2 percent. In relatively dry states with large agricultural sectors, such as Colorado, these percentages are even lower (table 2.1). Although small in terms of quantity, municipal water use looms large in terms of average value per unit.

Shape of the Annual Demand Curve for Residential Water

Residential water demand has received considerable study. Danielson (1979), Young et al. (1983), and Gibbons (1986) each summarized the price elasticity findings of earlier studies and examined 23 unique studies published by 1980. Tables 2.4 and 2.5 list the elasticity findings of another 16 residential water demand studies published since 1980. All estimates of elasticity from these 39 studies are negative, indicating the expected downward sloping demand curve. Furthermore, nearly all estimates are above –1, indicating inelastic demand. On an annual basis, estimates of elasticity of demand among the 39 studies vary from –0.02 to –1.24, with most from –0.3 to –0.7.

Table 2.4 Price elasticity of annual demand for residential water.[a]

Author	Location	Elasticity
Billings (1990)	Tucson, AZ	-0.57
Griffin (1990)	Texas	-0.37
Hanke & de Mare (1984)	Malmo, Sweden	-0.15
Jones & Morris (1984)	Denver, CO	-0.14 to -0.44
Martin & Thomas (1986)	5 cities in arid areas	-0.49
Nieswiadomy (1992)	Northeastern U.S.	-0.28
	Southern U.S.	-0.60
	Western U.S.	-0.45
Rizaiza (1991)	Saudi Arabia (4 cities)	-0.40, -0.78
Schneider et al. (1991)	Columbus, OH	-0.26 to -0.50
Stevens et al. (1992)	Massachusetts	-0.41 to -0.69
Williams & Suh (1986)	United States	-0.49

[a] In most cases, the elasticities were estimated from a constant-elasticity functional form. Where a variable-elasticity functional form was used, we report the arc or point elasticity that was reported in the original, which is estimated at the average price for the sample. A range is also listed if different estimation procedures or different conditions resulted in more than one estimate. Where both long- and short-run elasticities were reported, only the long-run elasticities are listed. Griffin (1990), Hanke and de Mare (1984), and the -0.5 estimate of Schneider et al. (1990) were listed as "municipal;" all others were listed as "residential."

Table 2.5 Price elasticity of seasonal demand for residential water.[a]

Author	Location	Elasticity Winter	Elasticity Summer
Danielson (1979)	Raleigh, NC	-0.31	-1.38
Griffin (1990)	Texas	-0.32	-0.40
Griffin & Chang (1990)	Texas	-0.16	-0.38
Grima (1973)	Toronto, ON	-0.75	-1.07
Howe (1982)	U.S. (21 cities)	-0.06	-0.43 to -0.57
Lyman (1992)	Moscow, ID	-0.65	-3.33
Renzetti (1992)	Vancouver, BC	-0.01	-0.65

[a] Griffin (1990) and Griffin and Chang (1990) were listed as "municipal" and all others were listed as "residential."

Studies (e.g., Schneider et al. 1991, Lyman 1992) show that long-run demand is more elastic than short-run demand, which reflects adaptations to changing prices that occur gradually as consumers change habits and alter water using appliances or landscape vegetation. Most studies of water demand elasticity, however, have not attempted to measure both short- and long-run elasticities, leaving the length of run to be determined by their methods and data. The estimates of elasticity among the 39 studies include a mixture of short- to long-run estimates.

Nearly all studies of residential or municipal water demand use an econometric approach, most with cross-sectional data but some with time series data. Most studies assume a non-linear functional form, thereby predetermining the shape of the annual demand curve. Many studies assume a Cobb-Douglas (power) function that yields a constant elasticity curve; note the number of studies listed in table 2.4 with only one elasticity estimate, which indicates a constant elasticity model. Some other studies (e.g., Foster and Beattie 1979) assume an exponential function on water price.

Studies of water demand in the U.S., whether cross-sectional or time-series studies, have used data with relatively little variation in water price. For example, average prices charged by the 218 cities studied by Foster and Beattie (1979) varied across cities from \$0.10 to \$1.79/m^3, and average prices charged by the 30 Texas communities studied by Griffin and Chang (1990) varied across communities from \$0.34 to \$1.62/m^3. U.S. studies do not include cases with sufficiently high water prices to allow accurate estimates of the shape of the upper left portion of the demand curve. Thus, the estimates of price elasticity reported in the 39 studies apply to the low-price portion of the residential demand curve.

Martin and Thomas (1986) provided a unique estimate of the entire demand curve for residential water via their comparison of water use in five cities that, although sharing an arid climate, differ markedly in the cost of providing water and in the price charged to consumers. These prices

varied from \$0.16 to \$25.01/m^3 and represent cities in the U.S., Kuwait, and Australia (table 2.6). The authors reported that a demand curve with constant elasticity of –0.49 provided the best fit of the five points. We found one other high-priced case in the literature (Taif, Saudi Arabia) reported by Rizaiza (1991) (table 2.6).

Table 2.6 Residential water price and quantity data for selected cities.

Author	Location	Quantity (l/c/d)[a]	Price (\$/m^3)[b]
Martin & Thomas (1986)[c]	Coober Pedy, Australia[d]	50	25.01
	Kuwait urban areas	184	1.19
	Perth, Australia	288	0.55
	Tucson, AZ	371	0.48
	Phoenix, AZ	595	0.16
Rizaiza (1991)[e]	Taif, Saudi Arabia	35	8.39

[a] Liters per capita per day..
[b] 1995 dollars.
[c] Marginal prices.
[d] Desalinized water delivered by tanker.
[e] Average prices. Delivered by tanker.

Representative Annual Demand Curve for Residential Water

All evidence about residential demand suggests a downward sloping demand curve concave to the origin. Power and exponential functions are options for characterizing such a curve. An exponential function has the advantage of being able to intersect the price axis to represent the cost of a more expensive alternative if one exists. If the source being modeled is the municipal supplier, possible alternatives include trucking water in from other locations and purchasing bottled water from the supper market. For example, two of the locations listed in table 2.6 have prices for water delivered by tanker (one is for desalinized water). Bottled water sells for about \$1/gal (\$264/m^3). See Abdalla et al. (1992, table 1) and Laughland et al. (1993, table 2) for estimates of bottled water prices for some Pennsylvania communities.

One approach to estimating a representative residential water demand curve is to adopt an exponential function. The point of intersection along the price axis ($P_{Q=0}$) would equal the cost of the next more expensive source of residential supply. As seen above, this cost might range from \$25 to \$250/m^3; the exact cost would depend on the available alternatives in the location of interest. Assume, for the purpose of the example, that $P_{Q=0}$ = \$100. As an estimate of $Q_{P=Pe}$, the quantity demanded at the existing price P_e, we adopt the U.S. average. Americans paid an average of \$0.48/m^3 for publicly supplied treated domestic water and consumed an average of 397 liters per capita per day (l/c/d) (table 2.7). This yields an inverse demand function of P=100 e$^{-Q/74}$ using the exponential function approach described previously. A more accurate estimate of the curve might be obtained by incorporating elasticity information using the approach described in Appendix B, Case III.

Table 2.7 Residential water price and quantity data for Western states.[a]

State	Quantity	Price (\$/m^3)
Arizona	550	0.69
California	504	0.55
Colorado	572	0.38
Idaho	1076	0.33
Montana	557	n.a.
Nevada	812	0.34
New Mexico	678	0.64
Oregon	481	0.33
Texas	542	0.47
Utah	826	0.21
Washington	553	0.47
Wyoming	701	0.52
Western average[b]	654	0.45
U.S. (all 50 states)	397	0.48

[a] Domestic use of publicly supplied water in 1985 from Solley et al. (1988). Average cost of publicly supplied residential water, updated to 1995 dollars, from van der Leeden et al. (1990).
[b] Simple average for the 12 states listed above.

Commercial Water Use

Few studies have estimated demand for commercial water uses. Table 2.8 lists three of the available studies. One of these studies, by Schnieder et al. (1991), separated government and school use from other commercial uses. Schneider et al. also estimated residential demand and concluded that commercial demand was much more elastic than residential. This conclusion is sensitive to the particular kinds of commercial establishments included in their data. Lynne et al. (1978) estimated demand for numerous types of commercial establishments (e.g., motels and department stores) and found a wide range in price elasticity at existing water prices.

Given the small number of commercial water-use studies, the wide range in elasticity estimates among these studies, and the small variability in water price across studies, estimating a representative demand curve for commercial water is risky. However, it may be possible to use the residential demand curve to represent M&I uses, with an adjustment for the additional use per capita. As seen in table 2.1, commercial use is about 30 percent of residential use.

Table 2.8 Price elasticity of annual demand for commercial and industrial water.

Author	Location	Type of water use	Elasticity
	Commercial		
Lynne et al. (1978)	Miami, FL	Commercial	-0.11 to -1.33
Schneider et al. (1991)	Columbus, OH	Commercial	-0.92
		Government	-0.78
		School	-0.96
Williams & Suh (1986)	United States	Commercial	-0.36
	Industrial		
De Rooy (1974)	New Jersey	Industrial	-0.35 to -0.89
Elliott (1973)	29 US cities	Industrial	-0.64
Grebenstein & Field (1979)	United States	Industrial	-0.33 to -0.80
Renzetti (1992a)	Vancouver, BC	Industrial	-1.91
Renzetti (1992b)	Canada	Industrial	-0.15 to -0.59
Renzetti (1993)	Canada	Industrial	-0.66 to -2.17
Schneider et al. (1991)	Columbus, OH	Industrial	-0.44
Turnovsky (1969)	16 towns in MA	Industrial	-0.50
Williams & Suh (1986)	United States	Industrial	-0.74

Demand for Raw Water

The cost of treatment and delivery must be subtracted from the total payment to yield the raw water value. The best generally available estimate of treatment and delivery costs is the average cost of delivered municipal water because utilities providing water typically set rates to just cover their costs. As mentioned, the average U.S. cost is \$0.48/m^3 for publicly supplied treated domestic water, but costs may vary considerably from one location to another (see table 2.7 for state averages). Assuming constant returns to scale, the cost is subtracted from the willingness to pay over the full range of quantity demanded to yield the demand curve for raw municipal water.

Monthly Distribution of Municipal Demand

Several studies found that residential demand elasticity differs by season, with elasticity being greater in summer than in winter (table 2.5). The principal difference between the seasons is that outdoor use, largely for lawn and garden sprinkling, occurs in the warmer months. Apparently demand for outdoor use is more sensitive to water price than is demand for indoor use. However, whereas winter elasticities are consistently below summer elasticities, there is little consistency across studies in the level of elasticity in either season. Winter estimates range from –0.01 to –0.75 and summer estimates range from –0.38 to –3.33 (table 2.5). The wide range in elasticity estimates for a given season reflects climatic differences among the locations studied and

methodological differences among the studies. Indoor water use remains quite constant throughout the year, but outdoor use responds to weather. Table 2.9 gives monthly breakdowns of annual water use for some comunities in Texas and along the Colorado Front Range. The greater concentration of deliveries during the summer months along the Front Range versus Texas reflects the drier conditions and greater seasonal variability in weather along the Front Range.

As with irrigated agriculture, the most direct approach to specifying monthly demand curves is to horizontally disaggregate annual water demand based on the typical monthly proportions of annual water use. Because indoor water use is the most valuable portion of domestic use and does not vary with weather, the point where the demand curve intersects the vertical axis should remain constant across months. The greater elasticity of demand in the summer is reflected in the flatter curves of these large quantity months (figure 2.3).

Table 2.9 Examples of monthly allocation of of annual municipal deliveries (in percent)[a]

	Texas communities[b]	Front Range communities[c]
January	6.7	5.3
February	6.8	5.6
March	6.9	5.6
April	7.9	6.3
May	8.5	6.4
June	9.5	9.8
July	11.2	14.8
August	11.2	16.8
September	9.9	11.4
October	7.5	7.2
November	6.8	5.6
December	6.8	5.2

[a] Columns may not total 100 because of rounding.
[b] From Griffin (1990), based on data from 221 communities. Figures are for 1981-85. Average annual use was 629 l/c/d.
[c] Weighted (by population) average 1995 deliveries of the following Colorado cities: Fort Collins, Loveland, Longmont, Greeley/Evans, Pueblo, and Denver. Average annual use in 1995 was 745 l/c/d.

Industrial Water Use

Industrial water use in the U.S. is dominated by use in thermoelectric power generation (table 2.1). For the country as a whole, thermoelectric power generation accounts for 40 percent of total withdrawals, with other industrial uses accounting for an additional 9 percent. However, the relative importance of industry is considerably less in the West, where thermoelectric power generation and other industrial uses account for 7 and 3 percent of total withdrawals, respectively. In some states industry uses even less water. In Colorado, for example, withdrawals for residential use alone are three times as large as withdrawals for all industrial uses (table 2.1).

The estimates of elasticity for industrial water use summarized in table 2.8 appear in aggregate to be larger than those for residential water (table 2.4). As with commercial uses, elasticity of demand for industrial uses varies among alternative types of industries (Renzetti 1992b, 1993, De Rooy 1974). Thus, the elasticity of demand in any urban area would be sensitive to the particular industries located there.

The cost of water is a very small part of total production costs in most industries (Bower 1966, Gibbons 1986), suggesting that industries might be able to pay considerable sums for water. However, because most industrial water users can recycle water in their production processes, they are unwilling to pay more for additional water withdrawals than the cost of installing or improving a recycling capability. Thus, the value of marginal withdrawals is approximated by the marginal cost of recycling. Gibbons (1986), citing Young and Gray (1972) and Russell (1970), reported marginal cost estimates of $9 to $20/acre-ft for cooling water and $91 to $134/acre-ft for industrial process water.

With complete recycling, withdrawal equals consumptive use. However, as seen in table 2.1, the industrial sector in general is far from achieving complete recycling. Thus, the value of withdrawals should approximate the marginal cost of recycling for a substantial proportion of the total industrial withdrawal. However, as withdrawal amount approaches consumptive use amount, the value of industrial water use must increase substantially. When this occurs, the demand curve for industrial water can be expected to rise sharply as quantity demanded approaches consumptive use. This suggests a nonlinear demand curve, convex to the origin, as could be depicted by a power or exponential function.

Unfortunately, specific estimates of an industrial water use demand curve are not generally available in the literature. If industrial water use is significant in a basin where water allocation is being analyzed using a model like Aquarius, a site-specific study may be necessary.

Hydropower

Electricity prices are so heavily regulated that they cannot be used as the basis for deriving the value of the water input at hydroelectric plants. As Young and Gray (1972) and Gibbons (1986) explained, the value of hydroelectric energy is therefore commonly estimated using the alternative cost technique, based on the reasoning that electricity not produced at hydroelectric dams will be produced at the next more expensive alternative. Use of the alternative cost valuation method is appropriate because the energy produced at a hydroelectric plant typically enters a large electric grid, composed of many hydro and thermal electric plants that supply numerous demand areas. The various plants in the grid are substitute suppliers, and the grid typically has some amount of excess capacity. If one supplier reduces production, other suppliers make up the difference. Typically, baseload power produced at a hydroelectric plant is replaced by a coal-fired plant and peaking power is replaced by a gas- or oil-fired turbine plant. In the Western U.S., gas-fired turbines are most common. More expensive oil-fired turbines also play an important role in the Eastern U.S.

Using the alternative cost method, the value of hydropower in dollars per acre-foot is estimated to be equal to 0.87 × feet of head × cost savings, where the cost savings is the cost per kilowatt hour (kWh) at thermal plants minus the cost per kilowatt hour at hydro plants. The 0.87 reflects the efficiency of converting the energy of falling water into electrical energy. The cost savings

may be determined for the short run or long run. In the short run, capital costs are fixed and the only costs of note are those for operation and maintenance (O&M). At thermal plants, O&M costs are dominated by fuel. Variable costs tend to be constant per unit of output, allowing simple average costs to be used regardless of the quantity of electricity. Gibbons (1986) reported that O&M costs at U.S. thermal plants averaged 18.52 and 44.01 mills/kWh at coal-fired and gas-fired plants, respectively, whereas the O&M costs at private hydroelectric plants averaged 1.52 mills/kWh (1980 dollars). The short-run values of hydropower averaged $0.0148 and $0.0370/acre-ft per foot of head for baseload and peaking power, respectively.

However, at about the time Gibbons (1986) published her report, the prices that electricity plants paid for fuel dropped and these lower prices have largely been maintained. Nationally, prices per kWh dropped to about 14 mills for coal and 23 mills for natural gas (Energy Information Administration 1996). These price reductions have had corresponding effects on total O&M costs at these plants. Further, prices in some areas of the West may be lower than these national averages. Accurate estimates of the value of hydropower require careful examination of costs at the affected thermal plants.

A long-run value would take into account the full costs of both types of plant and would include capital costs in addition to O&M costs. Estimating these costs is an involved process. Young and Gray (1972) provided one attempt to estimate the long-run value of hydropower. As Gibbons (1986) indicated, in an update of Young and Gray's work, the long-run cost savings per kilowatt hour may be smaller than the short-run cost savings. Most economic studies use short-run values. Currently in the West, an additional reason for using short-run values is the excess capacity in many areas.

Gibbons (1986) reminds us that using the alternative cost method described above ignores some costs, such as the environmental costs of thermal plants (e.g., air pollution) and hydro plants (e.g., inundation of a riparian area), and ignores the differences in the reliability of service between the two kinds of generating plants. However, similar costs of other water uses (e.g., nonpoint source pollution in irrigated agriculture) are also typically ignored when estimating water value. Such costs should be separately accounted for if economic efficiency is at issue.

Water Demand Curve in Hydroelectric Energy Production

Because per unit variable costs tend to be constant in electricity production, and the short-run cost savings is nearly constant per unit of output, demand for water at hydroelectric plants is aptly characterized by a horizontal demand curve. The point where this horizontal demand curve intersects the price axis depends on the relative costs of the hydroelectric plant and its least cost substitute. As described earlier, this depends on whether the hydroelectric plant produces peaking or baseload energy or some combination of the two. The annual and monthly demand curves would be identical except for their lengths, which indicate the capacities of the hydro plants for the respective time periods. This capacity constraint is best represented in Aquarius as a physical constraint.

Aquarius can also adopt a decreasing demand curve that reflects the changing return from hydroenergy during different periods of the day. This is classically represented by a step function that shows the change of the daily demand from a low during late night/early morning hours to a peak during normal business hours. See details in the chapter on benefit functions.

Riparian Recreation Water Use

Streamflow may have immediate effects on recreation, as well as lagged (future) effects. Immediate effects usually follow an inverted-U relation, with recreation quality improving with flow increases to a point but then decreasing with further flow increases (Brown et al. 1991). Consider the following examples. As flow increases from low levels, rafting quality improves because portages are avoided and rapids become more exciting but, if flow continues to increase, rafting quality deteriorates as rapids become unsafe or washed out (Shelby et al. 1992a). The scenic beauty of streamside views increases with flow as water begins to move freely and riffles appear but declines if flow level rises sufficiently to give the stream an over-full, flooded appearance (Brown and Daniel 1991). The quality of streamside fishing reaches an optimum at flows that moderately concentrate fish but still allow movement along the stream channel but declines at higher flows when the channel becomes flushed and wading becomes difficult or dangerous.

Lagged effects also occur for various recreation activities. For example, flows affect the ability of fish to propagate (Cheslak and Jacobson 1990), which eventually affects angler catch rates. Also, flows affect streamside vegetation, which over time affects the quality of streamside camping or picnicking (Shelby et al. 1992b).

Immediate and lagged effects on the quality of a recreation experience may translate into changes in individual willingness to pay for a recreation trip (quality effect) and in the number of trips taken (participation effect). Thus, the recreational value of a given flow level, *V(Q)*, has the following four effects:

$$V(Q) = \begin{pmatrix} \textit{immediate} \\ \textit{quality} \\ \textit{effect} \end{pmatrix} + \begin{pmatrix} \textit{immediate} \\ \textit{participation} \\ \textit{effect} \end{pmatrix} + \begin{pmatrix} \textit{lagged} \\ \textit{quality} \\ \textit{effect} \end{pmatrix} + \begin{pmatrix} \textit{lagged} \\ \textit{participation} \\ \textit{effect} \end{pmatrix} \tag{2.3}$$

Adapting the model of Duffield et al. (1992), the aggregate value of a change in flow Q in the current time period t is given by the partial total derivative of PV with respect to Q_t:

$$\frac{dPV}{dQ_t} = \left[P_t \left(\frac{\partial W_t}{\partial Q_t} + \frac{\partial W_t}{\partial P_t} \frac{\partial P_t}{\partial Q_t} \right) + W_t \frac{\partial P_t}{\partial Q_t} + P_{t+a} \left(\frac{\partial W_{t+a}}{\partial Q_t} + \frac{\partial W_{t+a}}{\partial P_{t+a}} \frac{\partial P_{t+a}}{\partial Q_t} \right) + W_{t+a} \frac{\partial P_{t+a}}{\partial Q_t} \right] (1+r)^{-a} \tag{2.4}$$

where P = participation quantity (e.g., in recreation visitor days), W = willingness to pay (WTP) per unit of P, a = a lag period, and r is a discount rate. The four terms within the brackets of equation (2.4) correspond to the four effects listed in equation (2.3). The two quality effects in equation (2.4) have two components: the direct effect of flow on WTP and a congestion effect. In all the partial derivatives of the effect of flow on WTP there is an implicit effect that the flow change has on the quality of the recreation experience; that quality change leads to the WTP change. Equation (2.4) may represent different kinds of recreation that are each affected by flow level.

Economists have been estimating the value of recreation for over 30 years using methods such as contingent valuation and the travel cost technique (U.S. Water Resources Council 1983). The first studies that attempted to determine the relation of streamflow to riparian recreation value were published in the early 1980s (table 2.10). Such studies have focused on specific activities such as fishing or white water boating. Different studies measured different effects of flow on recreation value. For example, Bishop et al. (1987) estimated the immediate quality effect, and Johnson and Adams (1988) estimated the lagged quality effect. Only one study (Walsh et al. 1980) estimated a congestion effect. In some cases, effects that were not estimated were assumed nil. For example, Bishop et al. ignored a congestion effect for boating because use was fully controlled by permit, and Daubert and Young (1981) ignored congestion because they found no difference in WTP between the least and most crowded days. In other cases, effects were simply ignored because of lack of interest or data, or because of the limits of the valuation method employed.

Two studies (Daubert and Young 1981, Hansen and Hallam 1991) achieved a value estimate that to some extent included both immediate and lagged effects. However, even in these cases interactions between immediate and lagged effects, such as the effect of current fishing pressure on future fish populations and catch rates, were ignored.

Most of the studies in table 2.10 calculated a recreational value of instream flow, usually in terms of acre-feet. Five of the studies estimated the change in marginal value of flow as flow changed, but others only reported average values or marginal values for a common flow level. All else equal, unit value of flow is expected to be greater the: 1) more recreation activities occur, 2) longer the stretch of river that receives recreation, 3) greater the number of trips received per activity per mile of river, 4) better the quality of the recreation experience, and 5) less is the river flow level. Bishop et al. (1987) reported an average value of about 50¢/acre-ft for fishing and boating recreation downstream of Glen Canyon Dam in the relatively high-volume Colorado River. Hansen and Hallam (1991) reported a wide variety of current marginal values across rivers, but values above $30/acre-ft were uncommon.

Shape of the Demand Curve for Instream Flow for Recreation

Daubert and Young (1981) and Duffield et al. (1992) presented demand functions that show the marginal value of instream flow dropping linearly with flow level from a maximum

Table 2.10 Studies of the economic value of streamflow for recreation.

				Measured effects of flow on value[b]					Economic values estimated		
				Immediate			Lagged		Trip	Fish caught	Flow volume[c]
Author	River	Method[a]	Activity	Qual.	Part.	Cong.	Qual.	Part.			
Bishop et al. (1987)	Colorado (AZ)	CV	Fishing; boating	X					X		X
Duffield et al. (1992)	Big Hole & Bitterroot (MT)	CV	Fishing; shoreline[d]	X	X				X		
			Fishing+shoreline	X	X						X
Daubert & Young (1981)	Poudre (CO)	CV	Fishing[e]	X			X		X		X
			Boating; shoreline	X							
Hansen & Hallam (1991)	Many in U.S.	CR	Fishing[e]		X			X			X
Harpman et al. (1993)	Taylor (CO)	CV	Fishing				X			X	
Johnson & Adams (1988)	John Day (OR)	CV	Fishing				X				X
Narayanan (1986)	Blacksmith (UT)	TC+CB	Fishing+shoreline		X				X		X
Walsh et al. (1980)	Seven in CO	CV	Fishing; boating		X	X			X		X
Ward (1987)	Chama (NM)	TC	Fishing+boating		X						X

[a] CV = contingent valuation method; TC = travel cost method; CR = cross-sectional analysis; CB = contingent behavior (i.e., contingent visitation).
[b] Qual. = quality effect; Part. = participation effect; Cong. = congestion effect.
[c] Dollars per acre-foot at selected flow levels. The relation usually applies across months of the season; Daubert and Young is an exception as they estimated separate relations for each month of the fishing season.
[d] Picnicking, camping, hiking, and relaxing.
[e] Combined current and lagged effects without accounting for interactions between them.

of $25 and $31/acre-ft, respectively, at 100 cfs, to minimums below zero at sufficiently high flows. Walsh et al. (1980) and Ward (1987) presented demand relations that show the marginal value of instream flow rising to a maximum of $53 and $41/acre-ft, respectively, at moderate flow levels and then falling below zero at sufficiently high flows. Similarly, Narayanan's (1986) demand function rises to a maximum value of $1.32/acre-ft at moderate flows, then drops to near zero at very high flows. A rising marginal benefit curve at very low flows, as reported in the latter three studies, indicates that flows must reach some minimum level before additions to flow have the expected impact on the quality of recreation. The former two studies might also have found a demand curve that rises and then falls as flow increases if they had investigated very small flow levels (below 100 cfs). In any case, once the minimum flow level is reached, the evidence from these five studies is that the demand curve is downward sloping.

Demand Monthly Distribution

All but one of the above studies gathered data for the principal recreation season—usually from May to October—and essentially assumed that the seasonal relation applied to each month within the season. Daubert and Young (1981) estimated separate relations of flow to value for each separate month during the season; however, the amount of data per individual month was small. As a first approximation, the seasonal demand curve of aggregate WTP versus flow level could be applied to each individual month of the recreation season, based on the assumption that variation in recreation participation and quality across months is a function of changing flow level.

Nonuse Values

Nonmarket, or noncommodity, uses of water include not only recreation (discussed in the previous section) but also preservation. Whereas riparian recreation involves an actual trip to a river or stream, preservation of riparian areas and aquatic habitat does not. Nevertheless, preservation is valuable to many people, as evidenced by the millions of dollars annually donated to organizations such as the Nature Conservancy. Preservation is known by economists as a nonuse value.

Using contingent valuation, economists have attempted to estimate preservation value, focusing on categories of nonuse value called existence and bequest values (see Brown 1993 for a survey of nonuse value studies). A few of the nonuse value studies have focused on water flow. For example, Loomis (1987) studied the nonuse value of flows into Mono Lake, and Brown and Duffield (1995) studied the nonuse value of preserving flows in two Montana rivers. However, application of contingent valuation to estimate nonuse value remains controversial (Arrow et al. 1993, Portney 1994). No doubt nonuse values for preserving certain species or ecosystems are substantial; however, there is no consensus that current methods accurately measure such values. In the absence of nonuse values for preservation of streamflows, preservation concerns can be handled in Aquarius using physical constraints.

Aggregate Consumptive Water Demand

In reviewing various studies, we found that demands for different consumptive uses in Western irrigation areas relate to each other roughly as depicted in the upper graph of figure 2.4. This figure is from Kelso et al. (1973), who were conceptualizing water demand in Central Arizona. At one extreme, residential users are expected to demand relatively small quantities of water but be willing to pay relatively high amounts. At the other extreme, agricultural users are expected to demand relatively large quantities of water but be willing to pay relatively low amounts. Commercial and industrial users are expected to fall in between these two extremes.

Aggregate consumptive water demand in an area competing for the same water supply can be expressed as the horizontal sum of the individual demand curves, as in the lower graph of figure 2.4. Although Aquarius allows agriculture and M&I to be represented by their individual demand curves, the size of the water allocation problem may be reduced by combining these two categories of use into an aggregate demand curve.

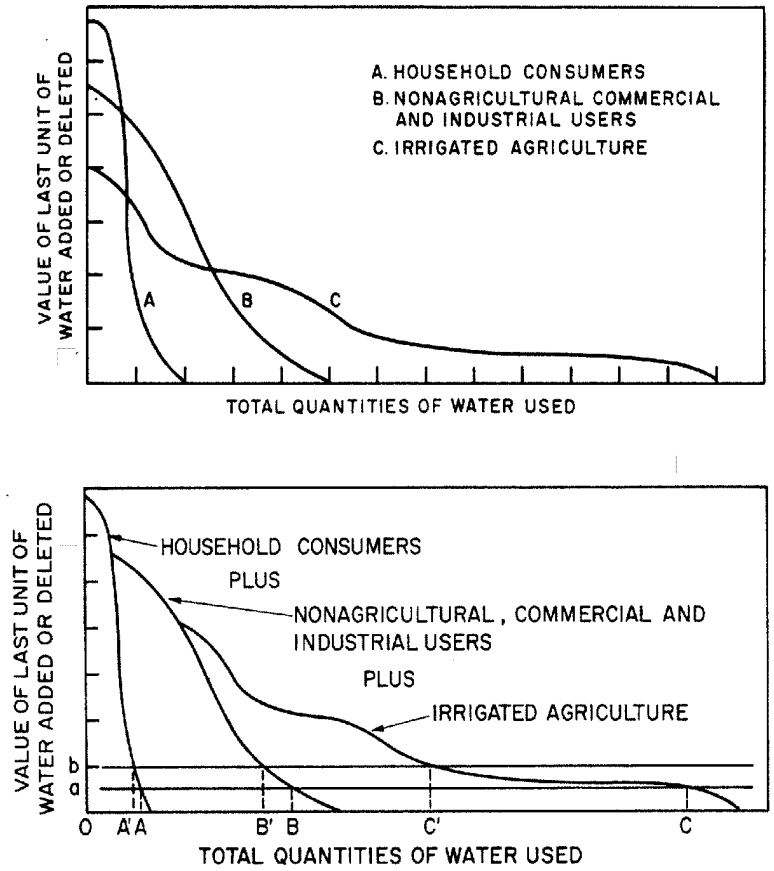

Figure 2.4. Individual demand curves (top); horizontal aggregation (bottom) (Kelso et al. 1973).

Final Remarks

Specifying demand curves is a difficult task. Although we know much about demand for different water uses, the precise location of a given demand curve is difficult to estimate (as evidence, observe the variety of elasticity estimates in tables 2.2, 2.4, 2.5, and 2.8). All attempts to plot demand curves must be regarded as approximate. In many situations, much extrapolation of demand in other locations, where demand studies have been done, is needed to proceed. Nevertheless, price-quantity relations do exist—though they may be difficult to precisely plot—and they do affect actual water allocation. Our understanding of efficient water allocation will be enhanced to the extent that we can model water allocation based on reasonably accurate demand functions. Even suboptimal solutions (based on approximate demand functions) are useful for understanding water allocation if they include all relevant water uses. With the growing demand for riparian recreation, this nontraditional water use can be equated with traditional uses in terms of how it is represented in the model and how an efficient allocation is reached.

In this chapter we have provided information about the shape of typical demand functions for different water uses to facilitate the task of specifying demand curves when good site specific demand studies are lacking. Because any such specification is an approximation, sensitivity analysis is essential if the resulting optimization is sensitive to the demand specifications. Aquarius has been designed with such sensitivity analysis in mind.

Chapter 3

Modeling of System Components

This chapter presents functional objectives, basic principles of operation, and modeling assumptions for the various water-using sectors included in the model. This material provides background information for more detailed discussions in subsequent chapters about the development of benefit functions and the formulation of the general water allocation problem. The operational characteristics of the system components presented here address only those elements that are relevant for our modeling purposes. For detailed information concerning the management and operation of water systems, consult specialized publications like those from the US Army Corps of Engineers (1986).

The River Basin System

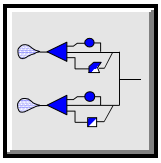

Water resource engineering has benefited enormously from systems analysis, which has provided a framework for the conceptualization and analysis of river basin systems. Hall and Dracup (1970) define a system as:

> *". . . a set of elements which interact in a regular manner. Every system must have a well defined boundary or rule which specifies and distinguishes that which is in the system from the environment in which it exists. There will be inputs and outputs across the boundary which must also be defined."*

This general definition aptly characterizes a water resource system. The elements interacting within the system, such as reservoirs, irrigation demand areas, and instream recreation activities, are called system components. System boundaries are defined by the flow network, which the analyst creates to represent the river basin to be modeled. The network specifies which components will be part of the system. Inputs, which consist of information necessary to simulate the operation of a system include, among others, natural flows, water demands for irrigation, instream flow requirements, and the price of energy. As explained latter, some of the inputs can be controlled by the analyst, but others are portrayed as uncontrollable inputs. Outputs are quantitative measures of the system performance that consist of many component objectives. Depending on the objectives, performance may be measured in terms of monetary values, amount of energy produced, biological indexes, or amount of water supplied to offstream demand areas.

A model is a conceptualization, and usually a simplification, of a real-world system. The degree of detail with which each component is characterized varies with the desired accuracy. For a model to reflect the real behavior of a system with accuracy, it must preserve all the essential operational characteristics of the river basin. For a generalized model, such as the one proposed here, this is a challenge.

Storage Reservoirs

The purpose of a storage reservoir (RES) is to transform the random and periodic nature of flows into a series of releases that more closely correspond with the seasonal water demands in a river basin. This objective is achieved by regulating the amount of stored water by passing flows through the reservoir outlet works and spillway to meet downstream water supply functions and to prevent flood damages. Flow regulation takes an uncontrolled flow, such as water flowing naturally in an undeveloped upstream basin, and turns it into a controlled flow, such as releases from a reservoir, to satisfy a particular demand. Figure 3.1 shows a sketch of a reservoir with all possible inflows and outflows.

XI = controlled inflows
d^u = upstream decision variable

UI = uncontrolled inflows
NF^u = upstream natural flows
L^u = upstream reservoir spillage

XR = controlled releases
d = decision variable

UR = uncontrolled releases
L = reservoir spillage
E = reservoir evaporation

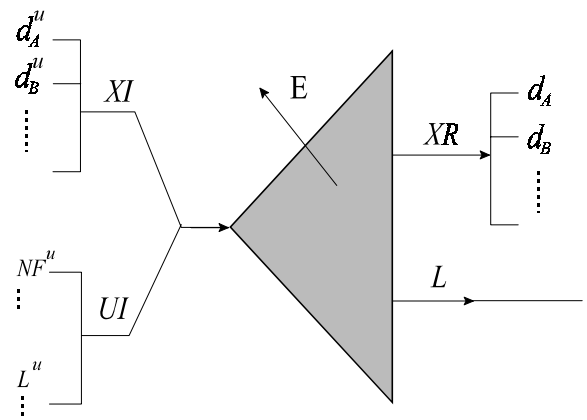

Figure 3.1 Variables used to describe storage dynamics in a reservoir.

A basic water balance equation that is used repeatedly in this study is:

$$dS(t)/dt = I(t) - O(t) \tag{3.1}$$

When equation (3.1) is used to describe the dynamics of storage in a reservoir, $dS(t)/dt$ is the rate of change of the reservoir storage with time, $I(t)$ is the rate of inflows into the reservoir, and $O(t)$ is the rate of outflows from the reservoir including controlled releases, spillage, and evaporation and seepage losses.

Analytical optimization techniques require that flows be classified as either controlled or uncontrolled flows. In figure 3.1, any upstream controlled flow, d^u, which reaches the reservoir under consideration, becomes a controlled inflow to the reservoir. If several d^u flows exist, they are all grouped under the term XI. Spillage from upstream reservoirs L^u and natural flows NF^u are

considered uncontrolled inflows to the reservoir and are grouped under the term *UI*. As with d^u, the inflow variable L^u, and NF^u may be indicative of one or more sources of flow. Note that all inflows with the superscript $^{(u)}$ originated upstream from the reservoir under consideration.

Among reservoir outflows, we present two groups: the controlled releases *d* and the uncontrolled reservoir releases, such as spills *L* and evaporation losses *E*, grouped under the term *UR* (not depicted in figure 3.1). As more than one controlled release *d* is possible, we group them under the term *XR*. Controlled releases encompass water for offstream uses such as hydropower, municipal water supply and irrigation demand areas. Moreover, two more uses have the capability to withdraw water from a reservoir, they are: instream recreation areas (where the released flow is considered a controlled reservoir release that becomes part of the *XR* term) and releases to protect the integrity of the river ecosystem (which impose minimum and maximum instream flow requirements but dos not have the capability to compete economically for water).

Using the notation indicated above and substituting the time index *i* for *t* to indicate discrete time intervals, the inflow to a reservoir during any time period *i* is expressed as a function of:

$$I(i) = f[XI_i + UI_i] = f[(d^u_{A_i}, d^u_{B_i}, \ldots) + (NF_i^u, L_i^u)] \tag{3.2}$$

where the expression $(d^u_{A_i}, d^u_{B_i}, \ldots)$ is used to indicate the contribution of upstream control variables to the reservoir inflows. Similarly, total outflows from the reservoir are expressed by:

$$O(i) = f[XR_i + UR_i] = f[(d_{A_i}, d_{B_i}, \ldots) + UR_i] \tag{3.3}$$

where again the expression $(d_{A_i}, d_{B_i}, \ldots)$ groups all controlled reservoir releases and UR_i encompasses spills and evaporation losses.

The physical characteristics of a reservoir are defined by two basic functions: the elevation-storage curve, which defines the variation of the storage capacity in the reservoir with the water surface elevation; and the area-storage curve, which represents the area enclosed by the reservoir at different elevations. Both functional relations can often be approximated by the following power functions:

$$H = c_1 S^{d_1} \tag{3.4a}$$

$$A = c_2 S^{d_2} \tag{3.4b}$$

where *S* is storage volume in millions of cubic meters (Mcm), *A* is reservoir area in square kilometers (Km^2), *H* is the depth of water above a given datum in meters (m), and *c* and *d* are the parameters of the analytical models. Because of natural changes, such as sedimentation,

occurring in the reservoir over time, the parameters may need to be recomputed after some years of operation. Other functional forms, such as a polynomial, can be used instead of (3.4a,b) if a good fit cannot be obtained with the power functions.

In addition to spills, two types of water losses to consider in a reservoir are evaporation and seepage. Both are functions of the level of storage in the reservoir. Evaporation is estimated by multiplying the surface area of the lake, computed using (3.4b), times the seasonal evaporation rate in millimeters. Evaporation rates can be estimated from pan evaporation data available for the region where the reservoir is located. Because precipitation over the lake is another source of inflow, the analyst should consider the net-evaporation rate, obtained as the difference between the pan-evaporation rate minus the expected precipitation depth during the season.

The consideration of seepage losses should be decided in a case-by-case basis. In general, assume that the amount of water lost by seepage increases with the level of storage in the reservoir because of the increase in the hydraulic gradient with additional storage. At present, the model does not account explicitly for seepage losses, although seepage losses can be imbedded into the evaporation losses as a first approximation.

Aquarius considers a single storage pool for flow regulation. This volume S is defined between the maximum S_{max} and minimum S_{min} allowed operating storages, which are prescribed by the user (figure 3.2). In addition, the user must indicate the reservoir storage at the beginning of the operation and that required at the end of the optimization horizon, which are denoted as S^o and S^f, respectively. Reservoir elevation can be converted into reservoir storage by applying (3.4a). The single regulation pool in Aquarius contrasts with some other reservoir simulation models, such as HEC-5 (HEC 1989), where the storage in each reservoir is discretized into levels for operational control purposes. In fact, no more than a single operating pool is necessary when an optimization algorithm is used to determine the system operation, because the model finds the optimal strategies based on perfect foreknowledge of inflows and demands. Nevertheless, future versions of the model will probably define several operational levels in a reservoir, such as those included in HEC-5 (inactive, buffer, conservation, and flood control pools), to be able to simulate the historical system operation based on a set of reservoir operation priorities (reservoir operation rule curves).

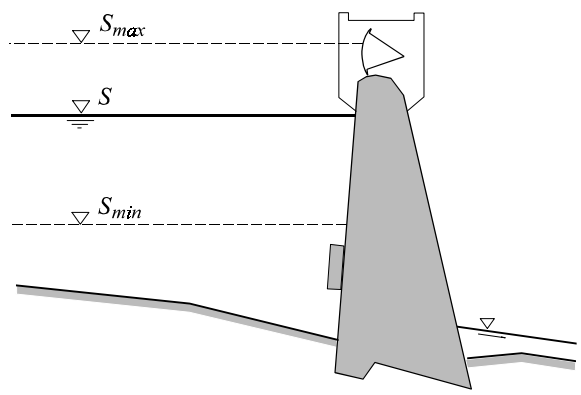

Figure 3.2 Reservoir regulation pool.

Practically all reservoirs have structures used to release floodwater that cannot be passed by other water passage facilities at the dam. Spillway crest gates are used to control the spillway discharge according to pre-established operation rules; ungated spillways are not subject to man-induced control. For the purpose of our modeling, we compute the total outflowing discharge, Q, of a reservoir through an ungated (uncontrolled) spillway by means of the following power function:

$$Q = C\, l\, H_1^{3/2} \tag{3.5}$$

where l is the net length of the spillway, H_1 is the total head-on crest including velocity head, and C denotes the coefficient of discharge of the overfall spillway. Knowing the water surface elevation in the reservoir, obtained from the elevation-storage function, and the elevation of the spillway crest (level of zero outflow), the model computes the volume spilled during the time interval of analysis.

For gate-controlled spillways (figure 3.3), outflow releases occur as orifice flow. The controlled discharge Q is computed mathematically by (3.6a), where H_1 indicates the head on the upper edge of the gate and H_2 is the head on the lower edge; both refer to the level of zero outflow. Again, C denotes the discharge coefficient, but for the case of a gate-controlled spillway, C is a function of the gate opening, as indicated by (3.6b). The coefficient of orifice discharge for various ratios of gate opening can be expressed in an analytical or tabular format and provided to the model by the user (not included in the present version of the model).

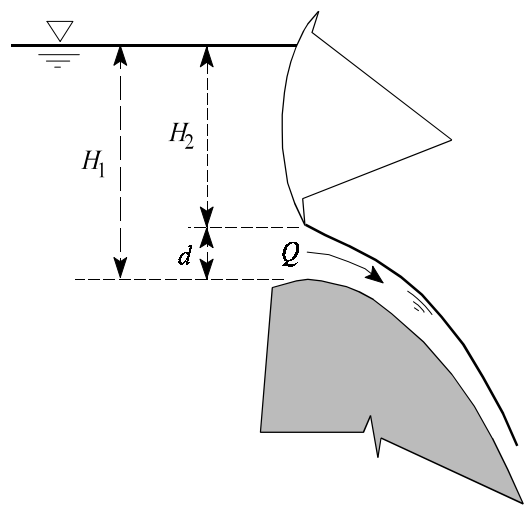

Figure 3.3 Section of a gate-controlled spillway.

$$Q = \frac{2}{3}\sqrt{2g}\; l\; C\,(H_1^{2/3} - H_2^{2/3}) \tag{3.6a}$$

$$C = f(d/H_1) \tag{3.6b}$$

The capacity of the spillway to pass a flood wave during a given time interval depends on the water surface elevation in the reservoir forebay at the beginning of the interval and on the length of the simulation time step. Iterative computational procedures are needed to estimate the gate-controlled spillway discharge coefficient C and to compute the residual reservoir storage volume

at the end of the simulation time step. Detailed simulation of the spillway operation becomes more relevant for small-time simulation steps (daily or hourly). For monthly or weekly time steps (depending on the size of the reservoir and inflow conditions), detailed operation of the spillway is usually omitted. For coarse time steps, the model passes any excess flood water downstream of the reservoir as a block, without attempting any spillway operation procedure. Details of the spillway operation simulation for short-time intervals will be provided in future versions of the model.

Hydropower Systems

Operation of an electric power system involves considering three basic components or subsystems, the: 1) energy sources (thermal, hydro, nuclear); 2) electric network components (generators, transformers, transmission lines); and 3) energy demand or load, constituted by a large number of electrical devices connected by the customers to the system. Each one of these components is a highly specialized engineering field that may require detailed modeling efforts depending upon the problem under consideration (e.g., El-Hawary and Christensen 1979). Our model deals only with the energy source component the hydropower (HPW) within it. Future additions of the model may include thermal energy sources to satisfy the electrical demand, providing the opportunity for a more comprehensive economical electric power operation.

In hydropower systems, hydraulic turbines convert the water energy stored in reservoirs or other structures into kinetic energy, which in turn is converted into electric energy by the generators. Hydropower facilities are typically hydraulically linked to reservoirs, and it is convenient to model the power plant and the reservoir as a unit. Aquarius can represent the following types of hydroelectric installations:

- storage plants, which have considerable water storage capacity in the reservoir that feeds the powerplant;
- run-of-river plants, which have negligible storage capacity and use water as it becomes available; and
- pumped-storage plants, which pump water from a lower reservoir to a higher reservoir (using inexpensive energy), to be run through turbines during on-peak demand periods. Pumped storage plants are not implemented in the present version.

Storage plants can be further classified as variable-head plants and fixed-head plants. A hydropower installation is treated as a variable-head powerplant when the net hydraulic head acting on the turbines changes with water surface elevation changes in the reservoir. Typical layouts of variable-head plants show the powerhouse as: an integral part of the dam; a separate unit constructed at the toe of the dam (figure 3.4, left); or built at a distance from the dam and connected to the reservoir by tunnel and penstock. A fixed-head powerplant operates under a nearly constant net hydraulic head and is connected to the reservoir by a canal or some other type of open-channel structure (figure 3.4, right). This is also called a canal powerplant.

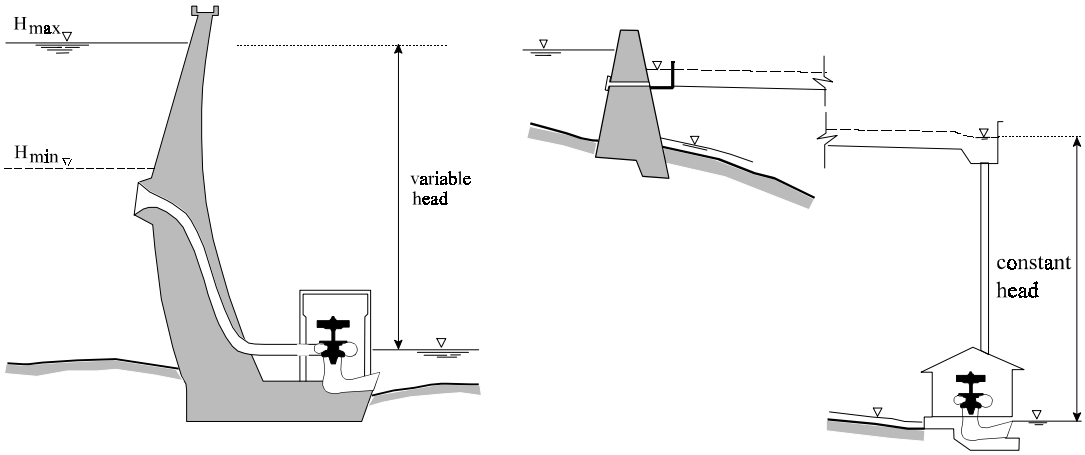

Figure 3.4 Layouts of storage hydro plants. Left = variable-head (H_{max} = maximum head; H_{min} = minimum head); right = fixed-head.

Flow regulation at the reservoir requires a decision to control the amount of flow being allocated from the reservoir to the storage powerplant. The model recognizes any link transporting water from a reservoir to a powerplant as a decision link, and creates the corresponding set of control variables.

The second basic type of power stations, run-of-river plants, are located in or alongside the main water course. Although several different layouts of run-of-river plants can be encountered, they all present: a diversion dam across the river with its intake; a canal that conveys the water into the forebay of the powerplant while gaining hydraulic head; the power-house; and another canal that routes the flow back to the river. The energy head acting on the hydraulic machinery is typically assumed fixed. This type of installation has insignificant impoundment at the powerplant. Therefore, water that cannot be passed through the hydro turbine runners because of a turbine shut down is spilled.

It is assumed that because flow going into a run-of-river plant is unregulated, the generated electric power is not a controllable variable. However, when the same run-of-river plant is analyzed within the context of a multi-user water system, it is necessary to make a decision as to how much water should be diverted into the powerplant and how much should remain in the river to comply with some instream use. As an example, figure 3.5 shows a fishery located in a river reach between the points of diversion and return of flows from a powerplant. The water allocation conflict between the two uses arises because of the need to limit the amount of flow that can be diverted into the powerplant in order to protect the fishery.

Aquarius considers any diversion node as a location in the flow network where a water allocation decision should be made. The diversion link branching out of the node becomes a decision link when formulating the water allocation problem. In other words, even for run-of-river plants, the model converts the diversion link conveying water to the powerplant into a decision link and creates the corresponding set of decision variables.

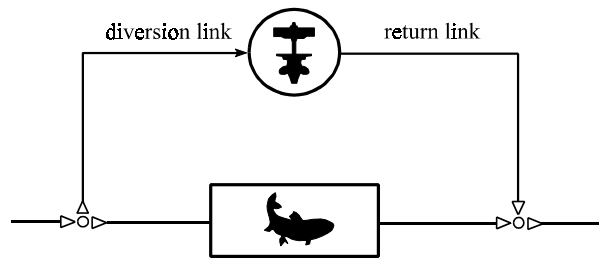

Figure 3.5 Power diversion in conflict with instream use.

The electric energy output of a hydropower plant is primarily a function of two variables: 1) the hydraulic head and 2) the rate of water passing through the turbines. The rate *P,* in kilowatts (kW), at which electrical energy can be generated is approximated by:

$$P\,[\mathrm{kW}] = 9.8\ \eta_t\ \eta_g\ Q\ H_n \tag{3.7}$$

where Q is the rate at which water is discharged by the powerplant in cubic meters per second (m^3/s), H_n is the net (or effective) hydraulic head on the turbines in meters, η_t is the turbine efficiency, and η_g is the generator efficiency. Both efficiencies can be grouped into an overall efficiency η, which depends on discharge and effective head. The net head H_n in (3.7) is equal to the gross head minus energy losses before entrance to the turbine and outlet losses. The gross head of a powerplant is defined as the difference between forebay elevation and tailwater elevation.

Customarily, the capability of a powerplant to produce energy is expressed by the energy rate function (*erf*), which calculates the amount of energy in kilowatt hours generated by the plant per unit volume of water released through its turbines (in cubic meters) during a unit period of time (one hour):

$$erf\,[\mathrm{kWh}/m^3] = (1/367)\ \eta\ H_n \tag{3.8}$$

In its most general expression, the energy rate function (3.8) depends on the plant efficiency and tailwater conditions, which in turn are a function of storage in the reservoir and discharge. This is shown qualitatively in figure 3.6, which shows a smooth and practically linear variation of the *erf* with H_n within the normal range of operation of the powerplant. Complete modeling of the *erf* also requires knowledge of: 1) the tailrace elevation versus discharge function; and 2) a function that estimates losses of the energy grade line versus discharge.

As presented later, the modeling of power production requires a continuous and differentiable form of the *erf*. As a first approximation, we can use the simple analytical expression given in (3.8), where the effect of discharge is implicitly considered within the variation of H_n and η. If necessary, a family of curves parametric on the discharge Q can be used to represent the surface in figure 3.6. When backwater effect from downstream reservoirs affects the tailrace elevation, special modeling considerations should be adopted, which are not in this version.

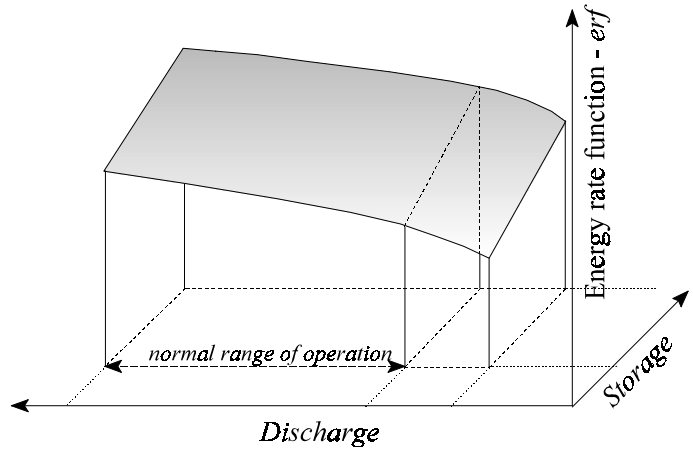

Figure 3.6 Energy rate function surface.

Agricultural Water Use

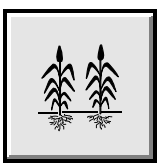

The lack of precipitation in many arid and semi-arid regions precludes crop production unless moisture is supplemented with irrigation (IRR) water. Historically, the need to ameliorate these moisture deficiencies has led to development of agricultural water supply projects, which are the largest consumptive users of water in a river basin. In the Western United States, such projects store runoff that occurs during the spring snow melt and releases it during the drier period of the growing season.

Large irrigation developments are composed of a complex array of water related structures for flow regulation, diversion, conveyance, distribution, and application. Once the irrigation water is applied to a field, additional structures may be required for capturing and transporting return flows back to the main water course. Aquarius deals with the first and last stages of the agricultural water use system: 1) the supply of water to the demand area and 2) the physical link to return the nonconsumptive portion of that supply to the system. The model does not analyze the intricacies of the distribution and application subsystems.
Water for irrigation may be diverted directly (i.e., without prior storage) from a river to a farm if natural streamflow is sufficient. However, low flows in a river may severely limit the capacity of a natural system to reliably supply water, particularly for large irrigation developments. By creating a storage capacity between the water source and the demand area, the reliability of the water source increases dramatically. The net increase in dependable water supply, the firm yield, is a direct function of reservoir storage. Typically, a storage capacity that supplies irrigation water holds a portion of the incoming water in storage during the high flow season until the

natural flow recedes to the point where it is no longer sufficient to meet the downstream irrigation demand. Releases of stored water from the reservoir are then used to augment flows in the river to meet the demand. Often the need for augmented flows persists until the end of the growing season. Even during the winter months, small amounts of water may still be allocated to the demand area for domestic use, stock water, or other purposes.

Aquarius can simulate the following possible schemes for providing water supply to an agricultural demand area:

- direct water diversion from existing flows in the river to an irrigation project;
- water released from a storage reservoir into a river and then withdrawn at a downstream diversion dam; and
- water released by gravity from a storage reservoir directly into a canal or conduit, rather than into the riverbed, and conveyed to the demand area. This also covers water pumped directly from the reservoir for irrigation.

Whether irrigation water is diverted from reservoirs, diversion dams or directly from natural river channels, the model individualizes the decision links in the network that are necessary to convey water to the demand areas and automatically creates the necessary sets of decision variables to control the supply.

The amount of water to supply to an agricultural area (water duty) must be specified by the analyst as Aquarius does not include an agricultural consumptive use submodel to estimate water demand for a given crop and condition. Water duties in the Unites States may range from about 3,000 to as much as 20,000 m^3/ha (1 to 7 acre-ft per acre). Losses in conveyance structures from the point of diversion to the point of application should be estimated by the analyst and added to the water duty. The return flow of water from irrigated lands may be collected in drainage channels where it flows back into a natural river channel at a known location. Alternatively, return flows may percolate into the regional aquifer to emerge as base flow at some location downstream in the river (distributed inflow). This return flow augments the prevailing river flow and, depending primarily on water-quality parameters, the return flow may be reused downstream by other users. As reported in the literature, the amount of return flow averages about 50 percent of the water diverted for irrigation purposes, varying from about 20 to 70 percent.

Return flows in the model are computed as a fixed percent of the flow allocated for the period, a percent (provided by the user) that is assumed constant for all seasons of the year. The model does not consider delays in the routing of flow return from the agricultural area to the site of recapture by the flow network. That is, the return flow is made fully available downstream during the same time interval of simulation. A more realistic conceptualization of return flow routing, necessary when considering return flows that move as subsurface flow and short simulation time intervals, will be included in a future version of the model. Whether return flows are transported back to the main watercourse using a conveyance structure or as groundwater accretion, the location in the flow network where return flows are regained should be indicated by the user during the process of creating the flow network. The return link is connected to the natural channel using a junction node (left- or right-bank). If no link is provided for return flows,

applicable when representing a transbasin diversion, the total amount of water diverted is assumed consumed in the demand area.

Once the area under cultivation is defined, the maximum and minimum amounts of irrigation water required for consumptive use is fixed. Early estimates of the amount of agricultural water available for the growing season are used to predetermine the planting area. Then, the amount of water required to meet the demand for growing the crops for the entire season is also defined. Water should be supplied period after period during the whole growing season to cover the expected deficiencies in consumptive water use. Failure to supply the demanded water at any period may cause the complete loss of the area under cultivation, with corresponding economic loss. Figure 3.7 shows a typical pattern of water requirements for agricultural water in the Rocky Mountain region of the Western U.S., with the maximum demand occurring at the end of the summer. In contrast to the well defined growing season shown in figure 3.7, other agricultural areas have a year-round growing season. Aquarius allows the user to prescribe the total amount of water to be delivered to an irrigation area during the entire growing season, the seasonal pattern of the deliveries, and even the maximum and minimum volumes at each time interval.

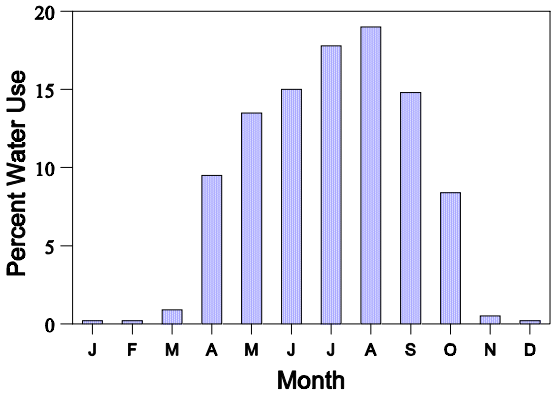

Figure 3.7 Seasonality of agricultural water use.

At present, surface water is the only source of irrigation water available in the model. In the future, we plan to incorporate surface and subsurface water to satisfy the demand of the agricultural sector. It is expected that as the marginal cost of acquiring surface water for satisfying irrigation demand increases, ground water may become an economical alternative.

Municipal and Industrial Water Use

Historically, urban water has been supplied separately from other uses, although municipal water supply intakes are sometimes provided in dams built for other purposes. For example, in some locations municipal water is conducted in combination with agricultural water where both use the same installations. A municipality water demand can be modeled as a single user using the system component described here, or it can be integrated with some other demand, using a combined demand curve. In this section, we concentrate on the basic operational characteristics and modeling of water supply for household, industrial, commercial, public and other activities,

usually termed M&I. The model simulates the water demand in the M&I zone as a single block, transporting the allocated water from the flow regulation subsystem to the boundary of the M&I area. The model makes no consideration of the distribution subsystem inside the demand area.

Practically all river systems supply water for municipal and industrial use. Supply of M&I water in a highly reliable manner is usually given a high priority. As a whole, M&I water demand is relatively small compared with irrigation demand. The normal range of demand from an urban area is from 250 to 400 lpcd (liters per capita per day) (70 to 100 gallons per capita per day), although this varies considerably with the climate and economic conditions of the demand area. In arid and semi-arid regions with an abundant and low-cost water supply, the average annual demand can be up to twice those values. The amount of water supplied for municipal and industrial uses is fairly uniform through the year, except in areas with substantial lawn sprinkling. Although indoor use remains practically constant over the year, the sprinkling of open areas contributes to the seasonality of urban demand. Figure 3.8 shows the typical monthly distribution of water use for a city in a semi-arid region in the U.S. The almost uniform distribution in figure 3.8 contrasts with the highly seasonal demand in figure 3.7 for irrigation.

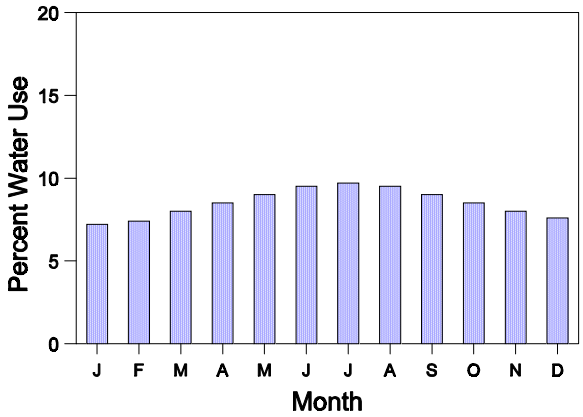

Figure 3.8 Seasonality of municipal and industrial use.

Similar to irrigation water, M&I water may be withdrawn directly from the stream using open channel flow diversions or from reservoirs that release water from storage into canals or pipes. The three schemes of water supply listed previously for agricultural water can also be simulated for M&I use by Aquarius. Whether M&I water is diverted from reservoirs, diversion dams or directly from natural river channels, the model detects decision links in the network that convey water into M&I demand areas and automatically creates the necessary sets of decision variables to control the supply.

Return flows from urban areas are collected by a network of sewers and transported to treatment plants before being finally restored to the river channel. It is generally reported that between 60 and 90 percent of the total water supplied to an M&I area is returned as waste water, with small changes in water quality after treatment. The return flow augments the prevailing river flow and, depending on water-quality parameters, it may be reused downstream by some other water users. Return flows in the model are computed as a percent (entered by the user) of the total allocated inflow; this percentage is held constant for all seasons of the year. Losses in conveyance structures from the point of diversion to the point of use should be estimated by the analyst and added to the water demand. As indicated earlier for irrigation return flows, the present version of the model cannot delay flows returning from the demand area to some later time step, although

for M&I use this is less critical. While building the flow network, the user should indicate the junction site where M&I return flows are routed back to the main watercourse (using a left- or right-bank junction node). If no link for return flows is provided, the model assumes that the total amount of diverted water is consumed in the demand area.

Instream Recreation Water Use

The importance of instream water recreation (IRA), such as fishing, boating, swimming, and picnicking at the water's edge, has recently increased dramatically. Throughout earlier decades, when many of the reservoirs and diversion works in the US were constructed, recreation was an incidental use of rivers, streams, lakes and reservoirs. After passage of the Flood Control Act of 1936, which required benefit-cost analysis of federal water development projects, recreation was often given formal recognition. Although the expected recreation at a new reservoir was counted as a benefit, the reduction in recreation quantity or quality in a dewatered channel downstream was ignored.

As water development continued to alter instream recreational opportunities and as incomes and leisure time grew, stream-based recreation received enhanced recognition. The federal government began to require more formal consideration of recreation in analyses of water developments. Consider the procedures for evaluation of water and related land resources promulgated by the Water Resources Council during the 1960s and 1970s, passage of the National Environmental Policy Act of 1969, the 1965 and 1972 amendments to the Clean Water Act requiring states to specify designated uses of its water bodies, and the 1986 amendments to the Federal Water Power Act requiring that the Federal Energy Regulatory Commission give equal consideration to conservation in the licensing of hydroelectric projects. Thus, reservoir management has moved from ignoring instream recreation to recognizing the impact of streamflows for recreation and esthetics purposes.

Because the value of stream-based recreation is related to the level of instream flow, quantification of the relation of instream flow to the quality of recreation for activities, such as rafting and kayaking, is becoming an important consideration in operating reservoirs and scheduling releases on many rivers (see Brown et al. 1991).

The attention given to instream flows goes beyond the demand for stream-based recreation. Colby (1990) comments that additional benefits are generated by the maintenance of instream flows, benefits related to the knowledge that the riparian ecosystem is preserved (nonuser values) and a stream's waste assimilation capacity (water quality benefits). Such benefits are often included with recreation benefits as conservation or environmental benefits. Because such inclusion is confusing, we, following the recommendation of the National Research Council (1992), separated water-based recreation from water use to protect ecosystem effects, fish and wildlife management, and habitat preservation, which is discussed later. The water use discussed in this section is the more commercially oriented water-related

recreational activities, specifically, those occurring on natural waterways, excluding reservoirs and lakes.

A complex example of today's increasing demand for a host of water uses including high-quality water-based recreation is found in the Tennessee Valley. The growing number of requests from the local community prompted the Tennessee Valley Authority (TVA) to re-examine the operation of its large network of river-reservoir units, many of which were originally single-purpose power projects. The resulting study (TVA 1990) is a major effort to find a socially acceptable balance between the traditional uses of water in the TVA system, such as hydroelectric power production, navigation and flood control, and nontraditional uses such as recreation, water quality, and residential development.

A key decision variable in balancing competing water uses is the timing of reservoir drawdown (figure 3.9). For lake-based recreation and tourism, lakeside residential development, and some environmental issues, the longer high lake levels are maintained the better. However, delayed drawdown could cause water spills at the dams creating a risk of substantial hydropower losses, lack of flexibility in the operation of the power system, and increased pollution introduced by alternative energy sources.

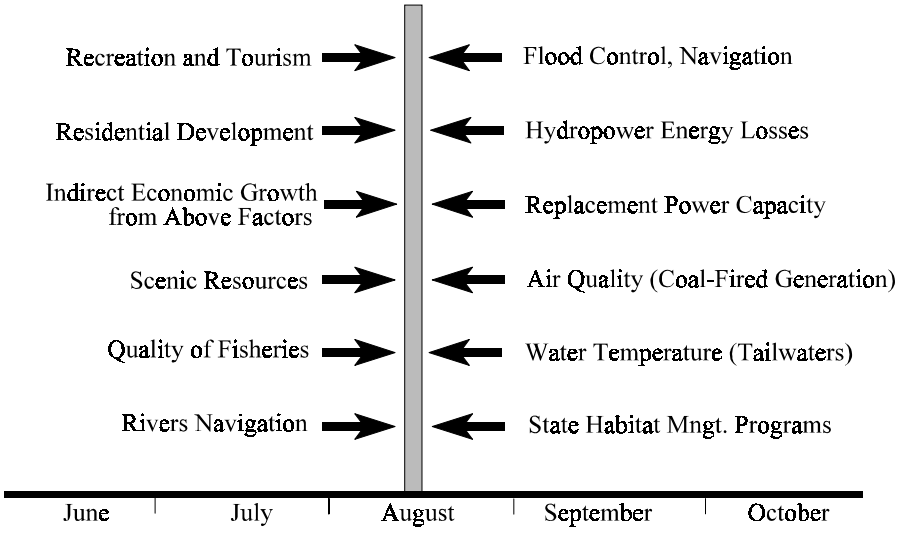

Figure 3.9 Forces acting on lake drawdown (TVA 1990).

Recreational use of streams has increased remarkably where whitewater floating is possible. For example, on the Cache la Poudre River of Northern Colorado, the number of people participating in commercial raft trips grew from 125 in 1984 to over 30,000 in 1995. During the same time, private river use by kayakers, rafters, and canoeists increased from a few hundred to about 9,000 trips per year. Similar increases have occurred on many rivers throughout the United States.

In addition to whitewater boating, many rivers have a large number of anglers and participants in water-enhanced activities such as camping and sightseeing. All this activity has a significant impact on local economies, where recreationists purchase goods and services related to their water-based activities. More difficult to measure but equally important is the value of the recreation to the participants. The value of stream-based recreation can be estimated in economic terms commensurate with the values of more traditional water uses by allowing such values to be incorporated into the multipurpose modeling process. Because stream-based recreation is not sold in competitive markets like many other water projects, the recreation value estimation requires specialized approaches. Nevertheless, this should not discourage attention to instream economic benefits. Recent studies (e.g., Duffield et al. 1992) have provided strong evidence that instream benefits can sometimes exceed those generated by offstream uses, and that gains are achievable on some systems by reallocating water from consumptive to instream uses. Similarly, Colby (1990) argues that instream values are high enough to compete in the market for water rights with offstream uses when important recreation sites and wildlife species are involved.

Note that water recreation has marked seasonal characteristics, similar to agricultural water use. The number of visitors can vary from very low during cold winter months to the very high during the spring and summer. For recreation, seasonality is also at the daily level as weekday use is typically much lower than weekends use. This suggests the need to use very short-time intervals when simulating the operation of a river system that includes recreation activities (see Morel-Seytoux et al. 1995).

The use of water for instream recreation is not exempt from conflicts with other uses. For instance, maintaining higher instream flows during the weekends increases opportunities for activities such as kayaking and boating but conflicts with electric power objectives because electricity demand tends to be lower during the weekends. Extra weekend releases may reduce the capability of the powerplants to meet energy and power demand during weekdays because of lower reservoir levels. Helping solve conflicts of this nature is the focus of multipurpose water system analysis.

Reservoir Recreation Water Use

In addition to the instream recreation activities described previously, other water-related recreational activities are practiced by the general public on and around reservoirs and lakes. Residential development is also a common shoreline use where the land is privately owned. Reservoir recreation activities (RRA) include fishing, boating including water skiing, swimming, camping, picnicking and sightseeing. These activities have become an important use of some reservoirs. Indeed, it is no longer uncommon for systems to be operated to maximize reservoir recreation activities during the summer months at the expense of other water uses such as hydropower.

Reservoir recreation is typically a highly seasonal activity, similar to instream recreation water use. The number of visitors is higher during the summer months, particularly for water sports activities such as sailing and water skiing. The same requirement for short-time intervals of analysis discussed for instream recreation applies here.

The use of water for reservoir recreation is not exempt from conflicts with other uses. Reservoir operation for recreation tends to keep the water surface high and minimize water level fluctuation. Excessive drawdown and large fluctuations may prevent sailing, disturbs access to docks and creates unpleasant view for visitors, campers and home owners living along the reservoir shoreline. Examples of such conditions include a water supply reservoir that provides recreation during the late summer when agricultural withdrawals are greatest; and a reservoir with hydropower facilities generating electricity during high demand on-peak hours, causing water surface elevations to fluctuate enough to interfere with boating access during the summer, cause beach erosion affecting shoreline properties, and affect boat docks due to ice damage during the winter.

Instream Flow Protection

Fish and wildlife habitat protection has become an important instream flow (IFP) concern. In general terms, maintaining habitat involves protecting the ecosystem integrity of a river reach from excessive human activities. Preservation also involves geomorphological concerns. For instance, the volume and time distribution of water supplied to a river reach govern its sediment transfer capability, in turn altering the physical processes in the river and hence, its morphology (i.e., channel-forming flows). Riparian plant communities are also significantly affected by the level and frequency of channel inundation, water quality and temperature concerns. A detailed discussion of these topics is beyond the scope of this work. Our purpose is to recognize their importance in the analysis of flow networks and to provide some basic modeling elements.

Endemic fish populations throughout the U.S. are protected under the Endangered Species Act of 1973, and several recovery programs for fish and wildlife have been established by the U.S. Fish and Wildlife Service. Flow-habitat models are used to support flow recommendations to protect endangered fish. These models define the necessary flow conditions to protect and enhance biological species in a river (Lamb 1995), ideally, by re-establishing the natural variability of the flow regime lost by human-induced changes.

The two most common structural measures causing disruptions in natural flow regimes are construction of reservoirs that regulate flow and depletion of instream flows by offstream withdrawals. Figure 3.10 illustrates the effect of flow regulation in a snow-melt dominated basin. The graph, two mean annual hydrographs for the Black Canyon of the Gunnison River in Colorado, shows flows before and after reservoirs were built upstream in the mid 1960s. Note the drastic change in the pattern of flows caused by the presence of the reservoirs. Regulated flows

are significantly higher outside the snowmelt season, and the natural peak in runoff occurring during the spring and early summer has been totally eliminated.

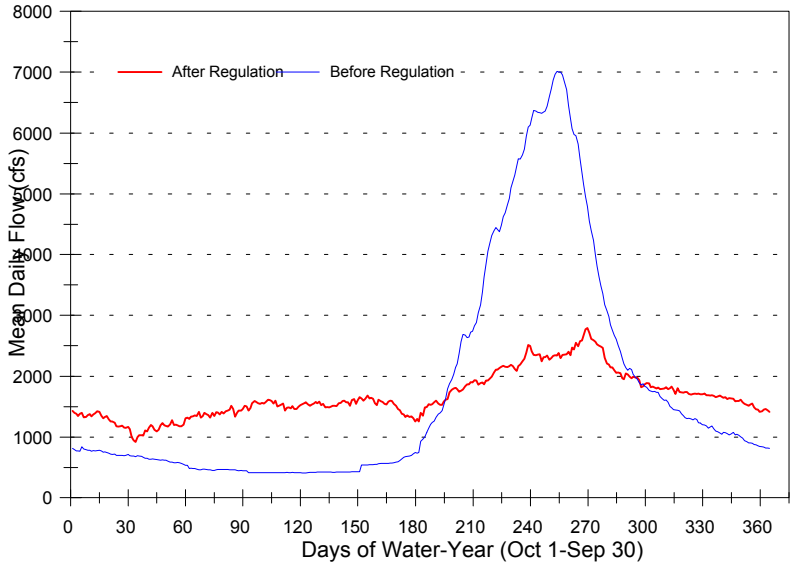

Figure 3.10 Annual hydrographs, pre- and post-regulation, for the Black Canyon of the Gunnison River.

The effects of flow regime alterations on habitat, and of habitat changes on species populations, are complex. Stream ecologists are, however, gaining a sufficient understanding of these relations, at least for some species, to recommend changes in water management to maintain habitat. Analysis is then needed on the feasibility of the changes, and on the effect of these changes on other water uses. Sometimes such analyses can be accomplished at a monthly time step, but other analyses require shorter time steps. For instance, the operation of a peaking hydropower facility can result in releases from zero (during off-peak hours) to maximum plant capacity (during on-peak hours). Although average flow values for the day may be adequate based on biological requirements, the within-the-day flow oscillations would be unacceptable. In addition to water quantity considerations, water quality is also critical. The release of cold-water from a reservoir can be detrimental for tailwater fisheries, creating ecological discontinuities in a colony of microinvertebrates that sustain the food web (see Stanford 1994).

Although not in the current version of the model, we plan to incorporate elements of the Instream Flow Incremental Methodology (IFIM), developed by the U.S. Fish and Wildlife Service (see Bovee 1982), to quantify stream habitat availability. This additional analysis component will be a tool to measure the effect of the dynamics of flows on fish populations. IFIM has evolved into a comprehensive river model incorporating fish habitat, recreational space, and woody vegetation responses to alternative water management schemes (Stalnaker 1994). This is achieved by constructing time-series of habitat from the time-series of flows at selected points within a river

system. The capability of Aquarius to estimate the quantity and quality of habitat at one or several locations in a basin, along with the other water uses, will enable scientists and decision makers to evaluate the adverse effects of planned or existing water developments and water transfers and identify opportunities for mitigation, restoration, or enhancement of affected instream and riparian resources.

Although economically significant fisheries are often identified, reliable estimation of nonuse and preservation values in economic terms is not possible. Therefore, Aquarius does not assume that direct economic values for fish and wildlife habitat are available. This does not imply that this particular instream use of water has no economic value. Economic valuation research has confirmed that the American public attaches significant value to wildlife and fish preservation (Boyle and Bishop 1987), even though that value cannot be estimated with the same precision as other goods and services. Although the public's willingness to pay for kilowatt-hours of electricity generated, tons of corn produced, and whitewater kayaking opportunities can be quantified, quantification of the economic value for the preservation of endangered species and similar environmental concerns for direct incorporation in this model is insufficient.

What is proposed is to address the water allocation problem for noncommensurate values in a unique manner. For a river site where the level of instream flow has been predetermined (e.g., using the IFIM technique mentioned above), but where the demand function in economic terms is difficult or impossible to define, the analyst can experiment with fictitious demand curves until the required water allocation level for that instream use is satisfied. Indirectly, this approach indicates the societal willingness to pay for incremental increases of flow for difficult to value water uses. In other words, this approach estimates the economic subsidy required to sustain the activity in open competition with the other directly valued uses in the basin.

Conveyance Structures

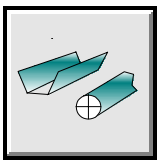

A river reach is the portion of a natural river system conveying flows between system components. The river reach, together with human-made conveyance structures, such as canals and pipelines, constitute the water system links of a river-flow network.

River reaches can experience different types of open channel flow, ranging from uniform to nonuniform flow and from steady to unsteady flow conditions, depending on whether the main flow characteristics are unchanged in space and time. The flow condition created in a natural channel when a reservoir discharges at varying flow rates creates unsteady flow conditions in the receiving channel requiring the consideration of time as an additional variable to describe flow in the river reach. This situation is illustrated in figure 3.11 in which releases from the upstream reservoir are modified by the river reach before entering the second reservoir.

The movement of a flood wave down a channel is associated with changes in timing and attenuation of the wave. The numerical analysis of this process is accomplished using some form of channel routing techniques. Any hydrologic routing technique is advised for this model. Hydrologic routing involves balancing inflow, outflow, and storage volume through use of the continuity equation (3.1). A storage-discharge relation is also required between outflow rate and storage in the system. There is a vast body of literature describing applications of hydrologic routing techniques (see Bedient and Huber 1988).

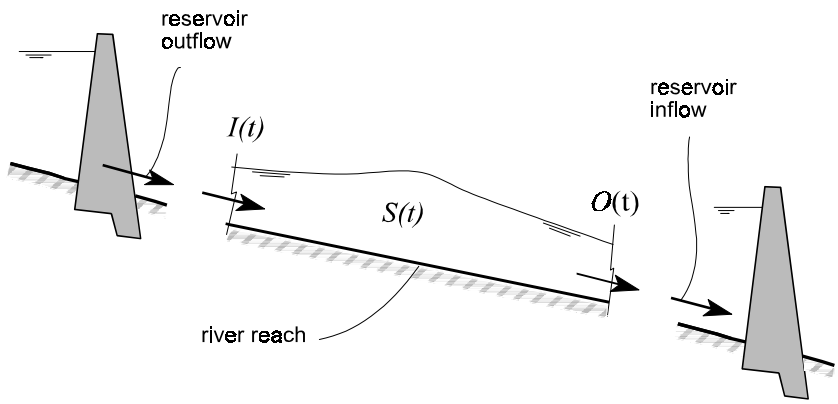

Figure 3.11 Flow routing in a river reach.

When equation (3.1) is used to describe the dynamics of storage in a river channel, *dS(t)/dt* is the rate of change of storage within the reach, *I(t)* is the inflow rate to the reach, and *O(t)* is the outflow rate from the reach (figure 3.11). One of the most applied hydrologic routing procedures is the Muskingum Method, which assumes that outflow from a routing reach is a linear function of the sum of prism and wedge storage in the reach. Under this assumption, the Muskingum routing equation yields:

$$O_t = C_1 I_t + C_2 I_{t-1} + C_3 O_{t-1} \tag{3.9}$$

Equation (3.9) indicates that the channel output at a given time step is a linear combination of the inflow to the reach during the same time step and the inflow and outflow during the previous time step. The coefficients C_1, C_2, and C_3 can be computed once the storage time constant for the reach *"K"* and the weighting factor *"x"*, the two Muskingum parameters, are known for the reach under consideration.

The time required for a flood wave to traverse the reach dictates the need for routing procedures. When the water allocation problem is simulated using long time intervals of analysis (e.g., weekly or monthly periods) it is assumed that all water entering a river reach is available at the

downstream end of the reach within the same time interval of simulation. Hence, channel routing procedures are unnecessary. This can be verified by knowing the length of the river reach and a flow velocity for any representative flow rate. In contrast, when the time interval of simulation is short (e.g., 24 hours or less) streamflow routing is generally required to predict the temporal variations of a flood wave as it travels from the beginning to the end of the river reach.

Other Water Uses Not Included in the Model

The main goal of the first version of the model is to provide the general framework and basic elements for the analysis of river networks. As future opportunities permit, additional water uses will be incorporated into the model, allowing for a more comprehensive analysis of multipurpose water projects. The following water uses are candidates for future inclusion in the model:

Flood Control Area (FCA): Flooding, the overflow of water in land areas alongside a river or stream that would not normally be inundated, can cause severe economic and human losses. The operational objective of flood control is to minimize the frequency and the magnitude of flood damages by implementing a series of structural and nonstructural control measures, although the risk of damage by extreme events is rarely eliminated. Flood control is a common objective of reservoir management.

Instream Water Quality (IWQ): Changes in the physical and chemical characteristics of instream flow are triggered by point and non-point pollution sources in the watershed. As surface flow levels are depleted, pollutants become concentrated and water quality standards (e.g., dissolved oxygen level) may be violated. Enhancing instream flows provides economic benefits by mitigating the treatment cost that would be incurred by discharges and by downstream water users to ensure compliance with federal and state standards (Young and Gray 1972).

Subsurface Water Supply (SSW): The current version of the model ignores ground water as a potential source. Considering the conjunctive use of surface and ground water will add a new dimension to the water supply component, allowing for water transfers between surface and ground water resources. In general, the cost of groundwater is higher than the cost of surface water due to pumping costs. However, where surface water is scarce, the cost of ground water may be less than it is for surface water, making augmentation of the supply using ground water sources a viable economic alternative. Note that where surface and ground water are hydraulically connected, the use of ground water can alter surface flows, with potential adverse effects on downstream third parties.

Commercial River Navigation (CRN): Commercial navigation requires sufficient flow to allow ship passage. Instream flow needs for navigation may conflict with other water uses. For example, periodic fluctuations in reservoir releases from power peaking operations may disrupt navigation.