CONCEPTUAL STORMWATER MANAGEMENT PLAN
FOR THE
SUMMIT AT SNOQUALMIE

Submitted to:

SE Group, Inc.
3245 146th Pl. SE
Bellevue, Washington 98007

Submitted by:

Golder Associates Inc.
18300 NE Union Hill Road, Suite 200
Redmond, Washington 98052

Andreas Q. Kammereck, P.E
Senior Engineer

Charles W. Lockhart, P.E.
Senior Consultant

Colby L. Caywood, P.E.
Project Engineer

July7, 2005

023-1209.000

TABLE OF CONTENTS

1.0 INTRODUCTION 1

2.0 DESIGN OBJECTIVES AND CRITERIA 2

3.0 PROPOSED STORMWATER MANAGEMENT PLAN 4
- 3.1 Existing Condition 4
- 3.2 Proposed Stormwater Facility Objectives 4
- 3.3 Conceptual Treatment Train Alternatives 5
  - 3.3.1 B1 - Basic Treatment Train 5
  - 3.3.2 B2 - Basic Treatment Train with Oil and Grease Treatment 5
  - 3.3.3 B3 - Bioswale at Discharge 6
  - 3.3.4 E1 - Enhanced Water Quality and Quantity Treatment Train 6
- 3.4 Parking Lot Grading Alternatives 7
- 3.5 Proposed Conceptual Stormwater Facility Designs/Recommendations 7
  - 3.5.1 Silver Fir Lot 7
  - 3.5.2 Summit West Lot 2 7
  - 3.5.3 Summit West Lot 1 8
  - 3.5.4 Alpental Lot 3 8
  - 3.5.5 Alpental Lot 4 8
  - 3.5.6 Alpental Lot 5 9
  - 3.5.7 Alpental Lot 6 9
  - 3.5.8 Alpental Lot 7 9
  - 3.5.9 Alpental Road 10

4.0 SNOW MANAGEMENT 11
- 4.1 Proposed Strategies 11
  - 4.1.1 Creek Shelf Removal at Parking Lot A6 11
  - 4.1.2 Access Ramp Removal between A6 and A5 11
  - 4.1.3 A6/A5 Pond and Switch 12

5.0 CLOSURE 13

6.0 REFERENCES 14

LIST OF FIGURES

Figure 1 Project Area Site Map
Figure 2 Silver Fir Parking Lot, Conceptual SMP Facility Layout
Figure 3 SW1 and SW2 Parking Lots, Conceptual SMP Facility Layout
Figure 4 Alpental Parking Lots, Conceptual SMP Facility Layout

LIST OF DRAWINGS

Drawing 1000 Conceptual Stormwater Management Treatment Train Alternatives
Drawing 1010 Conceptual Parking Lot Grading Alternatives
Drawing 1020 Conceptual Cross-Section of Lot A6 Shelf Removal
Drawing 1030 Conceptual Layout for Pond and Switch Structure

LIST OF TABLES

Table 2-1 Proposed Quantitative SMP Performance Goals

LIST OF APPENDICES

Appendix A Conceptual Design Calculations
Appendix B Typical Sections/Schematics for Stormwater Structures
Appendix C Preliminary Unit Costs for Stormwater Structures

1.0 INTRODUCTION

This draft report presents our recommendations for the Conceptual Stormwater Management Plan (SMP) for various parking areas located within the Special Use Permit (SUP) boundary for the Summit at Snoqualmie (Summit) and the Alpental Ski areas. Those portions of the project area included in this report are outlined below. Section 3.2 provides a summary of the proposed improvements at each lot.

- Silver Fir (SF) Lot 1 at Summit East located just below the Silver Fir chair;
- Summit West Lot 2 (SW2) located between the maintenance building and the rental lodge;
- Summit West Lot 1 (SW1) located north of the rental lodge;
- Lot 3 at Alpental (A3) located on the east side of the South Fork Snoqualmie;
- Lot 4 at Alpental (A4) located on the west side of South Fork Snoqualmie;
- Lot 5 at Alpental (A5) located on the west side of South Fork Snoqualmie;
- Lot 6 at Alpental (A6) located on the west side of South Fork Snoqualmie; and,
- Lot 7 at Alpental (A7) located on the west side of South Fork Snoqualmie.

Refer to Figure 1 for a site map showing the lot locations. The following sections of this report define the objectives of the SMP, summarize the existing conditions, summarize the regulatory criteria used for recommendations in this conceptual report, and presents concepts for proposed stormwater facilities at each parking lot. In selected areas, additional alternative snow management recommendations are also provided.

2.0 DESIGN OBJECTIVES AND CRITERIA

The project area for this report addresses the public lands within the Master Development Plan (MDP) for the Summit. These public lands are under the jurisdiction of the United States Forest Service (USFS) within the Department of Agriculture (USDA), and are designated as National Forest System Lands (NFSL). Conceptual design alternatives for the SMP are therefore governed by Standards and Guidelines (S&G's) provided in the Mount Baker-Snoqualmie National Forest Land and Resource Managfement Plan (USDA, 1990a) and the Wenatchee National Forest Land and Resource Management Plan (USDA, 1990b), as amended. These S&Gs include those provided in the Record of Decision for the Northwest Forest Plan (USDA, USDI, 1994) and as clarified in a 2004 Record of Decision (USDA, USDI, 2004). Under the 2004 clarifications, consistency with the ACS is to be determined through evaluation of project consistency with the Riparian Reserve S&G's presented in the Northwest Forest Plan Record of Decision (USDA, USDI, 2004). This SMP has been designed to support consistency with S&G's related to Riparian Reserves, as described in the EIS (refer to Section 1.2 – Tiering, Management Direction, U.S. Forest Service Policy).

In addition to addressing the Riparian Reserve S&Gs, the 2004 clarification indicates that a project record must evaluate the existing conditions of resources, display the effects of the project on the existing conditions, and then display efforts taken to avoid, minimize, mitigate, or otherwise reduce impacts on the aquatic environment. Inclusion of this SMP into the MDP is intended to serve as one method of reducing impacts of the MDP on the aquatic environment, as well as a potential means of maintaining or improving watershed conditions in the vicinity of parking areas on NFSL at The Summit (e.g., sediment delivery to streams, increased flows from impervious surfaces, snow management).

In general, this report has used the guidelines provided in the King County Surface Water Design Manual (KCSWDM, 1998) to further refine the criteria governing the development of this conceptual SMP. Table 2-1 below summarizes the key design criteria.

TABLE 2-1

Proposed Quantitative SMP Performance Goals

Event	*Water Quality*	*Sediment Regime*	*In-stream Flows*
6-month, 24-hour	Maintain or reduce effluent concentrations of TSS[1] and oil and grease	Maintain or increase the sediment trap efficiency	N/A
2-year, 24-hour	N/A	Same as for the 6-month, 24-hour event	Reduce the existing condition peak discharge by at least 50%
10-year, 24-hour	N/A	Same as for the 6-month, 24-hour event	Maintain or reduce the existing condition peak discharge
100-year, 24-hour	N/A	Same as for the 6-month, 24-hour event	Maintain or reduce the existing condition peak discharge

Notes:

[1] Total Suspended Solids.

Design criteria outlined in the King County Surface Water Design Manual includes Flow Control, Conveyance Requirements and Water Quality Control. The Flow Control standard used in design meets the criteria outlined in Level 3 Flow Control which is defined as a duration and peak matching performance standard. Conveyance requirements include the design of new channels to convey the 100-year peak flow to prevent flooding and erosion problems.

3.0 PROPOSED STORMWATER MANAGEMENT PLAN

The following discussion outlines the existing condition of the project areas and summarizes proposed stormwater recommendations for targeted areas.

3.1 Existing Condition

There are no existing stormwater facilities in-place for the parking lot areas addressed under this report at the Summit or Alpental. In general, the existing parking areas consist of a compacted gravel surface graded in some cases to drain to the perimeter of the lot boundaries. No sediment or oil and grease treatment facilities are currently in place. Improvements through implementation of new stormwater facilities would therefore focus on addressing the fine grained sediment transported by run-off from the existing gravel surfaces and treating for oil and grease.

The following discussion provides an overview of the stormwater plan objectives, outlines treatment train alternatives, and provides recommendations to each parking area.

3.2 Proposed Stormwater Facility Objectives

The focus of the development of a stormwater plan for the Summit and Alpental parking lot areas is to provide comprehensive collection and routing of surface drainage water, improve water quality by addressing fine grained sediments, and treat for potential hydrocarbon contaminants.

Mitigating for fine grained sediments washing off the existing compacted gravel parking lots would be accomplished by paving all parking lot areas. It is therefore assumed that paving of the lot areas would significantly reduce the contribution of fine grained sediments. Paved parking areas would be graded generally towards the center of the lot, and/or away from the perimeter snow storage areas. Where parking lot areas are proposed to be increased in size, the increase in runoff would be treated (i.e. water quantity treatment) to maintain pre-developed conditions, per the criteria provided in Section 2.0, Table 2-1. Where no increase in parking area is proposed, runoff would be collected and routed to designated discharge locations.

Magnesium Chloride (MgCl) would be used as a deicer on all paved lot areas and at the Alpental road connecting the parking lots. Use of MgCl would eliminate the need for sanding. The combined treatment of paving and use of MgCl is assumed to significantly reduce potential sources of fine grained sediments originating from the project area. As an added precaution to mitigate for potential fine grained sediments, and in the event that localized sanding is necessary or other fine grained sediments are transported to the project area by vehicles traveling to the ski area(s), sediment traps would installed at all paved lot areas.

Oil and grease contaminants would be addressed through the installation of oil water separators (OWS) at each parking lot sub-basin discharge location. These would be sized to treat anticipated runoff corresponding to the design criteria outlined in Section 2.0. Schematics of an OWS are provided as examples in Appendix B for various flow ratings.

In general, we assumed that runoff quantities from compacted gravel surfaces during frozen winter conditions would be very similar to the runoff from paved surfaces (refer to Section 4.2 Geology and Soils of The Summit at Snoqualmie MDP DEIS). Treatment for increases in water quantity would be provided where parking lots are proposed to increase in size. Where water quantity treatment is required, underground vaults are proposed which would be located within the perimeter of the parking area. Section 3.3 below provides a more detailed discussion of the proposed alternatives for water quality and

quantity treatment. The final treatment process will be determined in the Record of Decision (ROD) for The Summit at Snoqualmie MDP. Currently, only Lot SW1 is proposed to increase in size.

The feasibility of the conceptual stormwater facilities proposed in this report is based on preliminary design assessments specific to the site. No site topographic survey was available for the feasibility assessment. We assume that a detailed survey would be completed to support the final design. The conceptual design recommendations are supported by calculations presented in Appendix A. Typical diagrams/schematics for individual stormwater facility components are provided in Appendix B. Preliminary planning level unit costs are provided in Appendix C. Final design and specification of stormwater facilities should be completed at the time of final SMP implementation using the detailed site specific survey information and the most current inventory of existing conditions.

3.3 Conceptual Treatment Train Alternatives

The following discussion outlines treatment train alternatives for achieving the water quality criteria provided in Section 2.0 and Table 2-1. A treatment train is defined as a sequence of stormwater quality and/or quantity treatment facilities. Conceptual parking lot grading alternatives are discussed in Section 3.4 below. Recommended treatment trains for each parking lot area are discussed in Section 3.5 below. In general, armored erosion control pads would be installed at all discharge locations. In all cases, the final location of erosion control pads, manholes, OWSs, vaults, piping or any other drainage facility would be coordinated with The Summit at Snoqualmie personnel to make sure that locations consider snow management operations and overall ski area management issues.

3.3.1 B1 - Basic Treatment Train

The B1 basic treatment train focuses primarily on helping attain the water quality standards for sediment. The basic treatment train consists of (in series) paved parking lot areas; catch basins collecting and routing flows as well as acting as sediment traps; and discharge to designated areas. The B-1 basic treatment train does not include oil-water separators (OWS). As such, the B1 basic treatment train, as described above, is not proposed or analyzed in the Summit at Snoqualmie MDP DEIS. It is included in this discussion for comparison purposes against the other treatment trains. .

The catch basins would serve two primary functions: (1) to collect surface water and convey it to underground piping and (2) provide preliminary treatment for sediment. Individual catch basins would have a minimum of 2 feet of dead storage space below the inverts for outflow piping to act as a sediment trap.

Although it is anticipated that sediment would be reduced through proposed paving of parking lots and application of MgCl deicer instead of sand, catch basins would need to be inspected a minimum of three times per year: in at the beginning of summer in approximately June, at the beginning of winter in approximately October, and during the winter season in approximately February. Maintenance should include removal of accumulated sediments as needed.

Refer to the B1 conceptual cross-section in Drawing 1000.

3.3.2 B2 - Basic Treatment Train with Oil and Grease Treatment

The B2 treatment train includes the components discussed for the B1 basic treatment train (as discussed in Section 3.3.1), as well as oil-water separators (OWS) to treat oil and grease contaminates.

The B2 treatment train focuses primarily on helping attain the water quality standards for sediment and oil and grease contaminates. This treatment train consists of (in series) paved parking lot areas; catch basins collecting and routing flows as well as acting as sediment traps, oil-water separators (OWS); and discharge to designated areas.

Catch basins would function and be maintained as described in treatment train B1.

The OWS is a self-continued unit. An OWS is designed to separate petroleum contaminates from stormwater discharges. Final placement would depend on long-term operation and maintenance (O&M) requirements determined in coordination with The Summit at Snoqualmie personnel during the final design. OWSs should be inspected and maintained as needed at a minimum of three times per year: in at the beginning of summer in approximately June, at the beginning of winter in approximately October, and during the winter season in approximately February. OWSs should also be inspected after large storm events. The criteria for large storm inspections would be determined in the final design.

Refer to the B2 conceptual cross-section in Drawing 1000.

3.3.3 B3 - Bioswale at Discharge

Where space is available, a swale with rock check dams would be installed to further address suspended sediments and reduce velocities at the discharge location. Bioswales would be included at the discharge locations for either the B1 or B2 treatment trains. Bioswale designs are based on the water quality and conveyance criteria outlined in the King County Surface Water Design Manual (1998). Bioswales would be vegetated with native grasses, shrubs, and trees. Final determination of vegetative types would be determined in the final design (pending USFS Botanist approval). Selection of grass/shrub/tree types would recognize that establishing new vegetation at the site can be difficult and may take some time to establish sustainable plant communities.

Refer to the B3 conceptual cross-section in Drawing 1000.

3.3.4 E1 - Enhanced Water Quality and Quantity Treatment Train

The E1 treatment train includes the components discussed for the B2 treatment train (as discussed in Section 3.3.2). In addition, detention vaults would be utilized to maintain and/or restore in-stream flows.

The E1 treatment train consists of (in series) paved parking lot areas; catch basins collecting and routing flows as well as acting as a sediment trap; oil-water separators (OWSs); routing to detention vaults; and discharge to designated areas.

A detention vault would be designed and installed to treat increases in the water quantity, as outlined in Section 2.0, and Table 2-1. Detention vaults would be located within the perimeter limits of parking lot areas. The conceptual design assumes standard pre-cast vault sections with an approximate 20-foot width and a 6-foot inside depth. Pre-cast vault sections were selected to minimize overall costs and simplify construction installation. Refer to Appendix A for conceptual design calculations and Appendix B for typical schematics of vault structures.

Refer to the E1 conceptual cross-section in Drawing 1000.

3.4 Parking Lot Grading Alternatives

All parking lot areas discussed in this document would be paved, providing the opportunity to collect and route surface drainage as needed. Management of snow accumulations is important to the continued viability of the operation of the ski area, and therefore grading of the parking lots would be done to generally maximize snow storage and direct run-off and snow melt to open areas away from snow storage areas. In general, snow storage areas are located along the perimeter of the parking lots.

Two conceptual grading approaches are proposed for paved parking lot areas. The first approach involves reverse crowning of the lot in the center, providing graded slopes (approx. 2%) to drain areas from the outside perimeter towards the center of the lot where manholes would collect and convey the water. This approach would work better for smaller or narrow parking lots where graded surface areas sloped towards catch basins are less than approximately 100 feet.

The second approach would be to crown and grade slopes to drain away from the center of the lot to catch basins located just inside the perimeter of the lot. This approach would most likely work better in larger parking lots where it is not possible to drain surface water across long open areas, or distances between catch basins are greater than approximately 100 feet.

Refer to Drawing 1010 for typical grading sections. Final determination of grading for paved parking lot areas would be made at the time of final SMP design.

3.5 Proposed Conceptual Stormwater Facility Designs/Recommendations

This section summarizes the proposed conceptual stormwater design recommendations for each of the targeted parking lot areas.

3.5.1 Silver Fir Lot

Silver Fir (SF) Lot 1 at Summit East is located just below the Silver Fir chairlift (refer to Figures 1 and 2).[1] SF Lot 1 is located on both private and public land. The entire lot would be paved and incorporate stormwater management. The SF Lot would be paved to reduce the transport of fine grained sediments off-site. The lot would not be increased in size, and therefore no water quantity treatment is proposed. The B2 and B3 treatment train is proposed for this lot. The paved area would be graded per the approach outlined above in Section 3.4. Collected drainage would be routed to the east side of the lot into a swale that would run south to north along an existing shelf of ground (refer to Figure 2). The swale would discharge into the adjacent stream via an armored rock pad.

3.5.2 Summit West Lot 2

The Summit West Lot 2 (SW2) is located between the maintenance building and the main rental lodge at Summit West (refer to Figures 1 and 3). The SW2 Lot would be paved to reduce the transport of fine grained sediments off-site.

The SW2 Lot is proposed to be broken into three sub-catchment areas (refer to Figure 3): SW2-maint. referring to the area immediately surrounding the maintenance shop at the south end of SW2; SW2-south including the approximate upper half of SW2 extending from the maintenance shop downslope; and SW2- north including the approximate lower half of SW2 down to the rental lodge. The combined area

[1] The USFS approved the upgrade of the *Silver Fir* chairlift to a detachable quad in a Categorical Exclusion in 2008. While the *Silver Fir* chairlift has not yet been replaced as of this FEIS, the replacement and realignment of the chairlift is considered an existing condition in this FEIS analysis.

of SW2-maint. + SW2-south + SW2-north = SW2, and would not increase in size from the existing condition, and therefore no water quantity treatment is proposed. SW2-maint. represents a small area in the immediate vicinity around the maintenance shop. The SW2-north and SW2-south catchment areas make up the majority of the SW2 parking lot.

All paved areas would be graded per the approach outlined above in Section 3.4. The B2 and B3 treatment train is proposed for SW2-maint. The swale for SW2-maint would be located along the east side of the maintenance shop. The B2 treatment train is proposed for SW2-south and SW2-north. Collected drainage from these two sub-catchment areas would be routed to the north (downslope) and discharged into an existing 36-inch corrugated metal pipe (CMP) located along the west edge of the highway (Figure 3).

3.5.3 Summit West Lot 1

Summit West Lot 1 (SW1) is located just east of the main rental lodge at Summit West (refer to Figures 1 and 3). The SW1 Lot currently consists of three levels. There is an existing drainage ditch located between the lower two parking areas that drains to the north towards Interstate-90. The Summit plans to re-grade the upper two parking areas to create one large area, while leaving the lower elevation area in the same configuration. All final parking areas would be paved to reduce the transport of fine grained sediments off-site. All paved areas would be graded per the approach outlined above in Section 3.4.

The re-grading would result in two final parking levels, called SW1-upper and SW1-lower (refer to Figure 3). SW1-upper would include the combined area of the two previous upper parking areas, and SW1-lower would include the area of the existing lower lot area.

SW1-upper would increase in size, and therefore treatment is proposed for the increased quantity of water resulting from the larger surface area. The E1 treatment train is proposed for SW1-upper. The detention vault is proposed to be installed within the perimeter of SW1-upper. Discharge from the vault would be routed into the drainage ditch just to the east of the vault (Figure 3). Refer to Appendix A for preliminary design calculations.

The SW1-lower lot would not change in size and therefore no water quantity treatment is proposed. The B2 treatment train is proposed for SW1-lower. Collected drainage from SW1-lower would be routed to the east side of the same lot and discharged into an existing CMP (Figure 3).

3.5.4 Alpental Lot 3

The Alpental Lot 3 (A3) is located on the east side of the Upper South Fork Snoqualmie River, across from the Alpental Lodge (refer to Figures 1 and 4). The A3 Lot would be paved to reduce the transport of fine grained sediments off-site. A3 would not increase in size from the existing condition, and therefore no water quantity treatment is proposed. The B2 treatment train is proposed for A3.

All paved areas would be graded per the approach outlined above in Section 3.4. Collected drainage would be routed to the south side of the parking lot and discharged into an existing ravine which eventually drains into the South Fork Snoqualmie (Figure 4).

3.5.5 Alpental Lot 4

The Alpental Lot 4 (A4) is located on the west side of the Upper South Fork Snoqualmie River, immediately north of the Alpental Lodge (refer to Figures 1 and 4). The A4 Lot would be paved to reduce the transport of fine grained sediments off-site. A4 would not increase in size from the existing

condition, and therefore no water quantity treatment is proposed. The B2 treatment train is proposed for A4.

All paved areas would be graded per the approach outlined above in Section 3.4. Collected drainage would be routed to the east side of the parking lot and tightlined along the Alpental road to a central discharge point at the bridge crossing of the Upper South Fork Snoqualmie River between Alpental Lots 3 and 7 (refer to Figure 4). A tightline is a conveyance pipe that is intended to transport stormwater from one location to another.

3.5.6 Alpental Lot 5

The Alpental Lot 5 (A5) is located on the west side of the Upper South Fork Snoqualmie River, north of the Alpental Lodge and Lot A4 (refer to Figures 1 and 4). The A5 Lot would be paved to reduce the transport of fine grained sediments off-site. A5 would not increase in size from the existing condition, and therefore no water quantity treatment is proposed. The B2 treatment train is proposed for A5.

All paved areas would be graded per the approach outlined above. Collected drainage would be routed to the east side of the parking lot and tightlined along the Alpental road to a central discharge point at the bridge crossing of the Upper South Fork Snoqualmie River between Alpental Lots 3 and 7 (refer to Figure 4).

3.5.7 Alpental Lot 6

For Lot 6, snow management strategies are proposed in tandem with stormwater management design. In addition to the stormwater facilities recommended below, suggested snow management strategies are also recommended for Lot 7 and discussed further in Section 4.0.

Alpental Lot 6 (A6) is the most northern parking lot at the Alpental ski area (Figure 1 and 4). A6 would be paved to reduce the transport of fine grained sediments off-site. A6 would not increase in size from the existing condition, and therefore no water quantity treatment is proposed. The B2 treatment train is proposed for A6.

All paved areas would be graded per the approach outlined above. Collected drainage would be routed to the south end of the parking lot to a switch structure (refer to Section 4.1.3) that would direct flows either to the snow storage pond or to a tightline under the Alpental road for discharge at the bridge crossing of the Upper South Fork Snoqualmie River between Alpental Lots 3 and 7 (refer to Figure 4).

Refer to Section 4.1.3 for a description of the proposed pond and switch structure.

3.5.8 Alpental Lot 7

The Alpental Lot 7 (A7) is located on the east side of the Upper South Fork Snoqualmie River, north of the Alpental Lodge and Lot A3 (refer to Figures 1 and 4). The A7 Lot would be paved to reduce the transport of fine grained sediments off-site. A7 would not increase in size from the existing condition, and therefore no water quantity treatment is proposed. The B2 treatment train is proposed for A7.

All paved areas would be graded per the approach outlined above in Section 3.4. Collected drainage would be routed to the east side of the parking lot and tightlined along the Alpental road to a central discharge point at the bridge crossing of the Upper South Fork Snoqualmie River, downstream of A7 (refer to Figure 4).

3.5.9 Alpental Road

The road that provides access to the Alpental parking lots is also considered in this SMP. The road is proposed to be paved to reduce the transport of sediments off-site (Figure 1 and 4). The road would not be widened or otherwise increased in size, therefore water quantity control is not proposed.

The road would be crowned with a minimum 2 percent slope to either side of the centerline to provide drainage to the sides of the roadway. The B2 treatment train is proposed for road areas. Runoff would be directed into catch basins located along the sides of the roadway, routed through OWS's and then discharged to the South Fork Snoqualmie River. The preliminary discharge location is in the vicinity of the bridge over the South Fork Snoqualmie River (Figure 4). The final discharge location would be determined in the final design.

4.0 SNOW MANAGEMENT

Managing snow represents one of the biggest challenges in the operation of a ski area and design of a stormwater management plan for cold climates (CWP, 1997). The following proposals for snow management are based on review of available cold weather climate literature (CWP, 1997), (NCCG, 1997), and discussions with SE the Summit staff.

4.1 Proposed Strategies

Snow storage opportunities were evaluated for the parking areas addressed by this report. The A6 lot at Alpental was identified as having the most potential for developing additional snow storage. The following discussion outlines recommendations for optimizing snow storage at A6 to maximize parking efficiency. This action would not expand the parking area, but would provide additional snow storage capacity along the perimeter of the lot, thereby opening up parking space within the lot itself.

4.1.1 Creek Shelf Removal at Parking Lot A6

A small stream discharges off the steep slopes above Lot A6 and A5 on the west side of the lots (Figure 4). The stream takes an abrupt turn onto a shelf of fill material and flows along the top of the shelf around the north end of lot A6 before flowing into the South Fork Snoqualmie River. The shelf is not a natural feature, and appears to have been constructed for the purpose of diverting the stream around lot A6. Currently this area is used as a ski trail during winter. The existing shelf provides a base for the trail.

The proposal calls for changing the alignment of the stream starting at the point where it currently drops onto the shelf (at the edge of the parking lot). The stream would be re-aligned to flow to the south to lot A5 (Figure 4). The shelf along the west edge of lot A6 would be excavated to match the adjacent upslope area (refer to Drawing 1020 for a typical cross-section). The fill excavated from the shelf would be spread across the parking lot and/or be used to complete the final grading plan for the parking lot. We assume that the soil materials comprising the shelf would be suitable for use in constructing and grading the parking lot areas. Soil sampling and analysis would be completed in support of the final design.

The space previously occupied by the shelf would be used as snow storage for snow removed from the A6 parking lot (approximately 0.75 acre). Trail access would be maintained by grooming the snow flat to provide a trail surface each time snow is deposited. We anticipate that the skier trail would therefore change in elevation as snow is added into storage or as snow melts. The trail would remain accessible and function throughout the operation ski season.

4.1.2 Access Ramp Removal between A6 and A5

Lots A6 and A5 are connected by an access ramp that runs between the south end of Lot 6 down to the north end of A5 (Figure 4). This access ramp is used during the summer months, and is typically covered with snow in the winter months. This ramp is proposed for removal, creating additional snow storage areas accessible from both A6 and A5 (approximately 0.25 acre). The excavated slope where the ramp would be removed would be graded to a stable slope angle (maximum slope of 2H:1V) and covered with an erosion resistant quarry spalls armor layer of riprap. We assume that the soil materials comprising the ramp would be suitable for use in constructing and grading the parking lot areas. Soil sampling and analysis would be completed in support of the final design. Refer to Drawing 1030 for a typical cross-section.

4.1.3 A6/A5 Pond and Switch

The excavation of the access ramp between lots A6 and A5 discussed in the previous section offers the opportunity to provide a large snow storage area. To further increase the volume of available snow storage, the bottom of the ramp area would be over-excavated to create a shallow pond. Stormwater runoff from A6 would be routed to the pond through a 'switch' control structure (Figure 4). The stormwater flowing through the pond could have the secondary benefit of accelerating snow melt.

This alternative is proposed as a pilot program. There are uncertainties regarding the performance of the pond to increase melting of stored snow, and there may be modifications necessary at a later date to optimize the performance of the structure. Monitoring guidelines are addressed in the monitoring portion of the Summit at Snoqualmie MDP – Implementation, Operation, Restoration and Monitoring Plan (SE GROUP, 2004). Final details would be addressed in the final design.

The extent of melting is unknown at this time, and would be heavily influenced by temperature and precipitation conditions. The switch would consist of a manhole structure with inlet and outlet piping located at elevations that would automatically direct flows to the pond during normal operation, and direct flows around the pond if it is full or frozen. Flows that pass through the pond would be routed to the discharge point at Lot A7 at the bridge crossing of the South Fork at the River along Alpental road between Lots 3 and 7. Flows that are directed around the pond would also be routed to the discharge point at Lot A7 at the bridge crossing of the South Fork at the River along Alpental road between Lots 3 and 7.

Final switch piping elevations and piping layout would be completed in the final design. Refer to Drawing 1030 for a typical conceptual plan view and cross-sections.

5.0 CLOSURE

The report has been prepared exclusively for the use of the Summit at Snoqualmie, USFS and consultants for specific application to the DEIS for the Summit at Snoqualmie MDP. The information presented in this report is based on the available data and generally accepted standard of practice engineering principles. The recommendations presented herein outline a conceptual stormwater plan that is based on assumptions corresponding to the available data as outlined in the report. Development of a final stormwater plan would require confirmation of site conditions, completion of final design calculations, development of final design layouts, and development of specifications to support construction and a stamp by a Professional Engineer. Final design would require additional site specific topographic survey information detailing the elevations and locations of pertinent features of the parking lot areas discussed in this report. The recommendations presented herein are not intended to nor should they be construed to represent a warranty. We recommend that Golder be consulted if any changes to the recommendations are required, or if conditions encountered in the field are different than anticipated.

6.0 REFERENCES

Center for Watershed Protection (CWP), 1997, Stormwater BMP Design Supplement for Cold Climates, Prepared for US EPA Office of Wetlands, Oceans and Watersheds and US EPA Region 5.

Hydraulic Engineering Center Hydrologic Modeling System (HEC-HMS), U.S. Army Corps of Engineers, Version 2.2.1, http://www.hec.usace.army.mil/software/hec-hms/hechms-hechms.html.

King County Surface Water Design Manual (KCSWDM), 1998, http://dnr.metrokc.gov/wlr/dss/manual.htm .

Northwest Colorado Council of Governments (NCCG), 1997, Water Quality Protection Standards, Version: 12/30/1997.

USDA, 1990a. MBSNF LRMP.

USDA, 1990b. OWNF LRMP.

USDA, USDI, 1994. Northwest Forest Plan

USDA, USDI. 2004. Record of Decision Amending Resource Management Plans for Seven Bureau of Land Management Districts and Land and Resource Management Plans for Nineteen National Forests Within the Range of the Northern Spotted Owl: Decision to Clarify Provisions Relating to the Aquatic Conservation Strategy. U.S. Department of Agriculture.

Western U.S. Precipitation Frequency Maps, National Oceanic Atmospheric Administration (NOAA) Atlas 2, (http://www.wrcc.dri.edu/pcpnfreq.html)

FIGURES

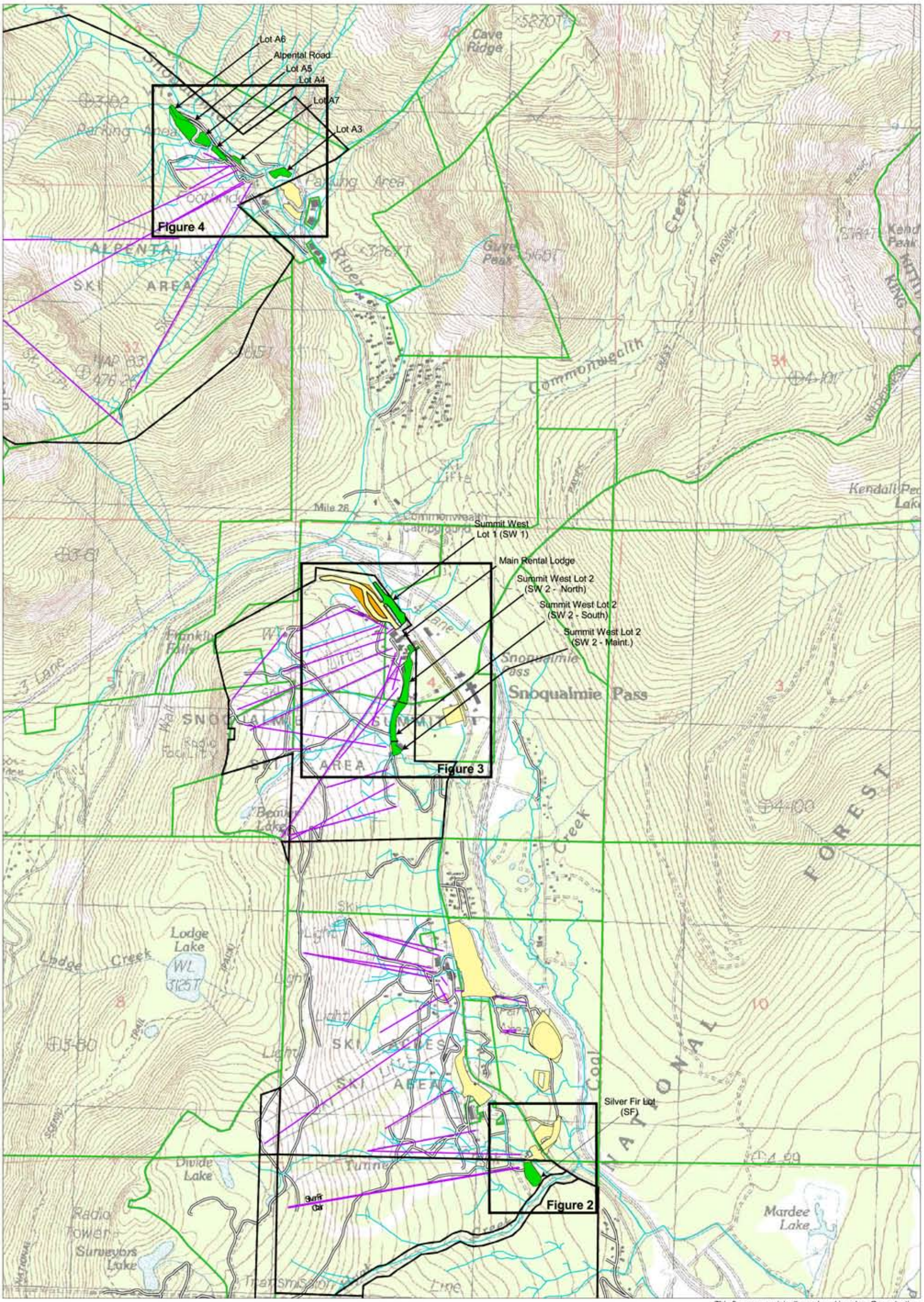

This figure was originally produced in color. Reproduction in black and white may result in loss of information.

LEGEND

- Parking Lot - Proposed Modifications
- Parking Lot - Existing and Proposed Area
- Parking Lot - Existing
- Building
- Land Allocation
- Chair Lift
- Stream
- SUP Boundary
- Road

0 1500
Scale 1" = 1500 Feet

Map Projection:
Washington State Plane
South Zone, NAD 83, Feet.

Source: USGS, SE Group

N

Summit at Snoqualmie Conceptual Stormwater Management Plan

Project Area Site Map

Drawn: RMT	Revision: 4	Date: Apr. 28, 2004	Figure: 1

0231209_102903.apr

Golder Associates

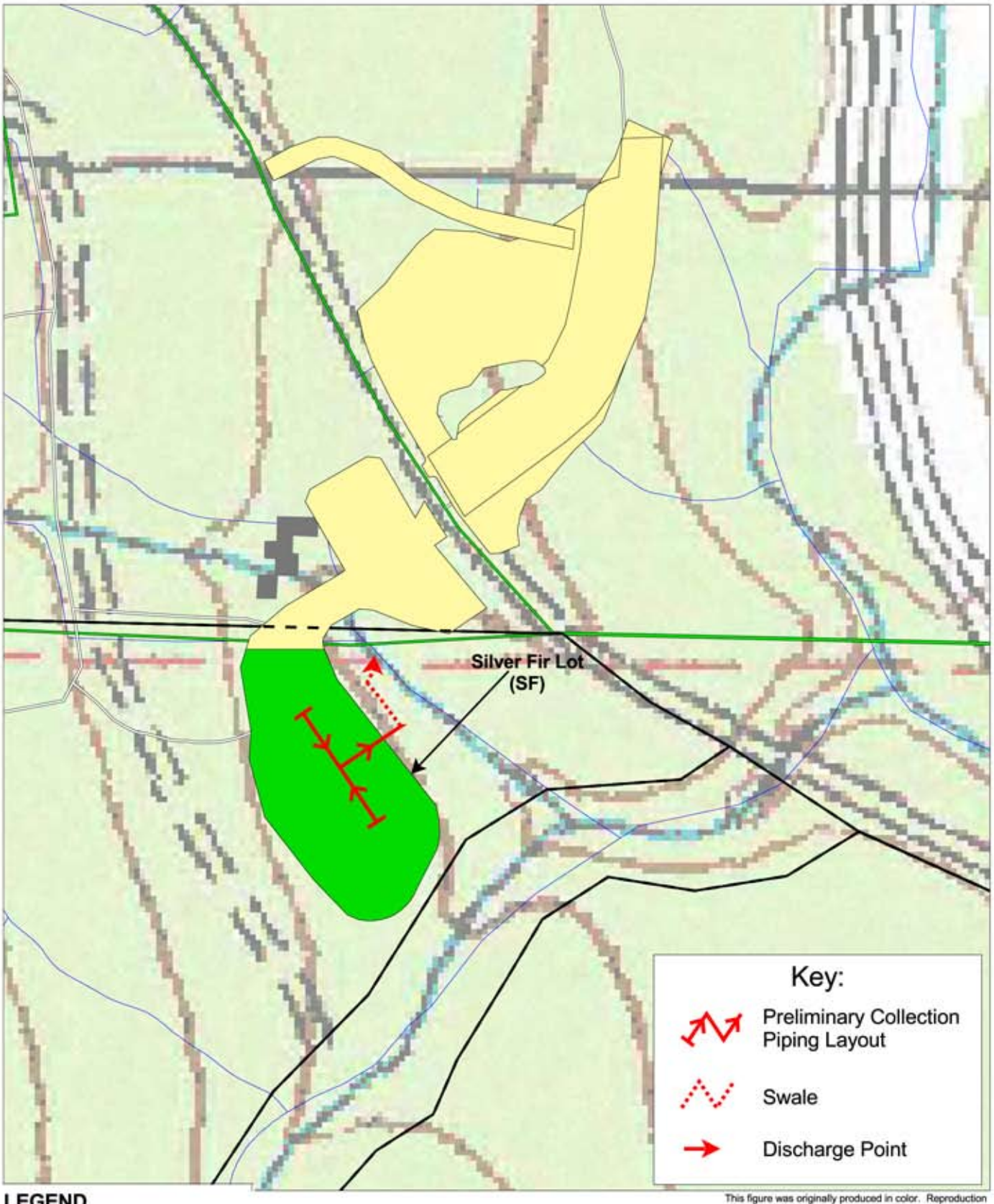

This figure was originally produced in color. Reproduction in black and white may result in loss of information.

LEGEND

- Parking Lot - proposed modifications
- Parking Lot - existing and proposed Area
- Parking Lot - Existing
- Building
- Land Allocation
- Stream
- SUP Boundary
- Road

0 200

Scale 1" = 200 Feet

Map Projection: Washiongton State Plane, South Zone, NAD 83.

Source: SE Group, USGS

N

SUMMIT AT SNOQUALMIE STORMWATER MANAGEMENT PLAN

Silver Fir Parking Lot Conceptual SMP Facility Layout

Drawn: RMT	Revision: 4	Date: May 4, 2004	Figure: 2

0231209100_102903.apr

Golder Associates

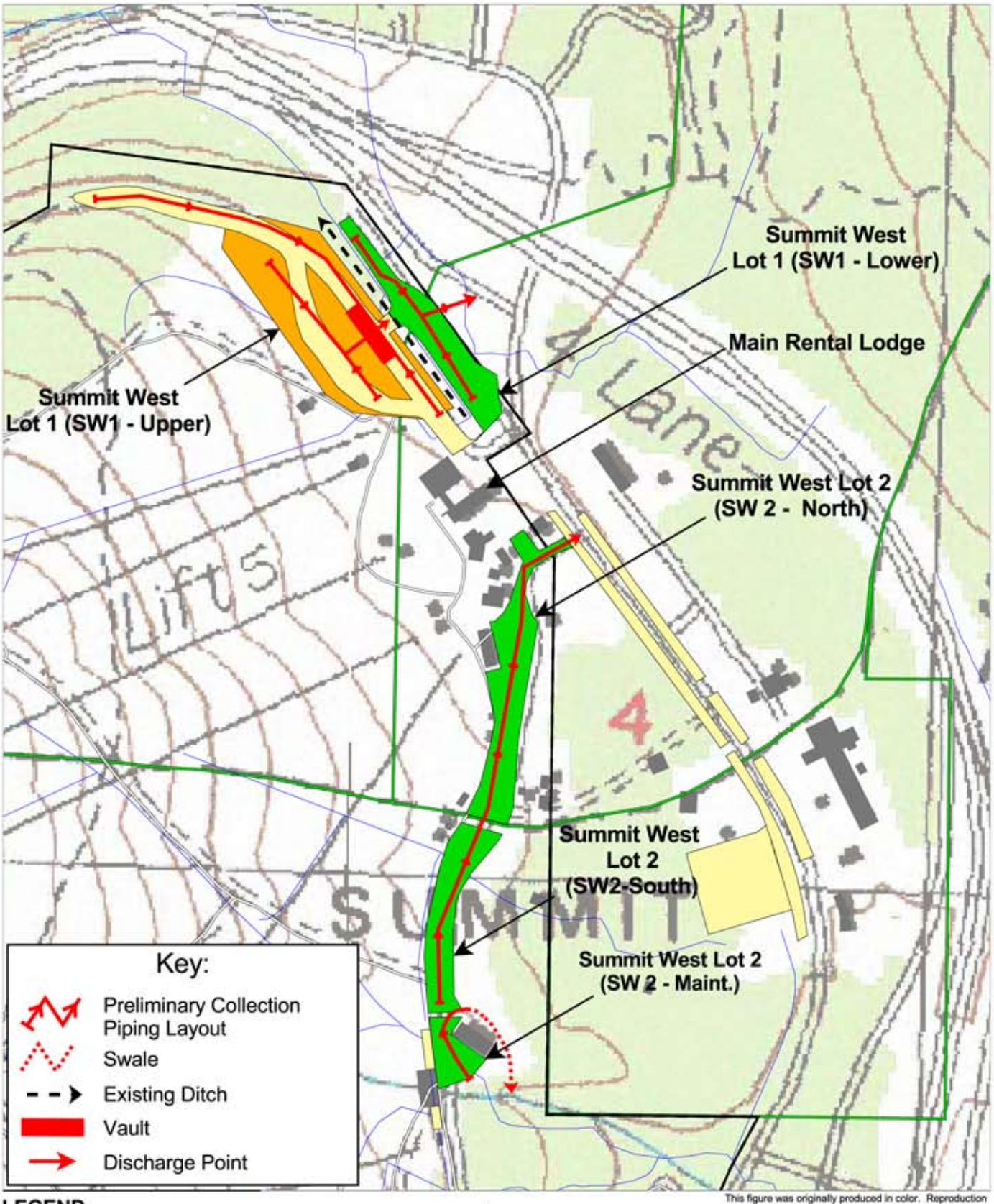

This figure was originally produced in color. Reproduction in black and white may result in loss of information.

LEGEND

- Parking Lot - proposed modifications
- Parking Lot - existing and proposed Area
- Parking Lot - Existing
- Building
- Land Allocation
- Stream
- SUP Boundary
- Road

0 450

Scale 1" = 450 Feet

Map Projection: Washiongton State Plane, South Zone, NAD 83.

Source: SE Group, USGS

N

SUMMIT AT SNOQUALMIE STORMWATER MANAGEMENT PLAN

SW1 and SW2 Parking Lots Conceptual SMP Facility Layout

Drawn: RMT	Revision: 4	Date: May 4, 2004	Figure: 3

0231209100_102903.apr

Golder Associates

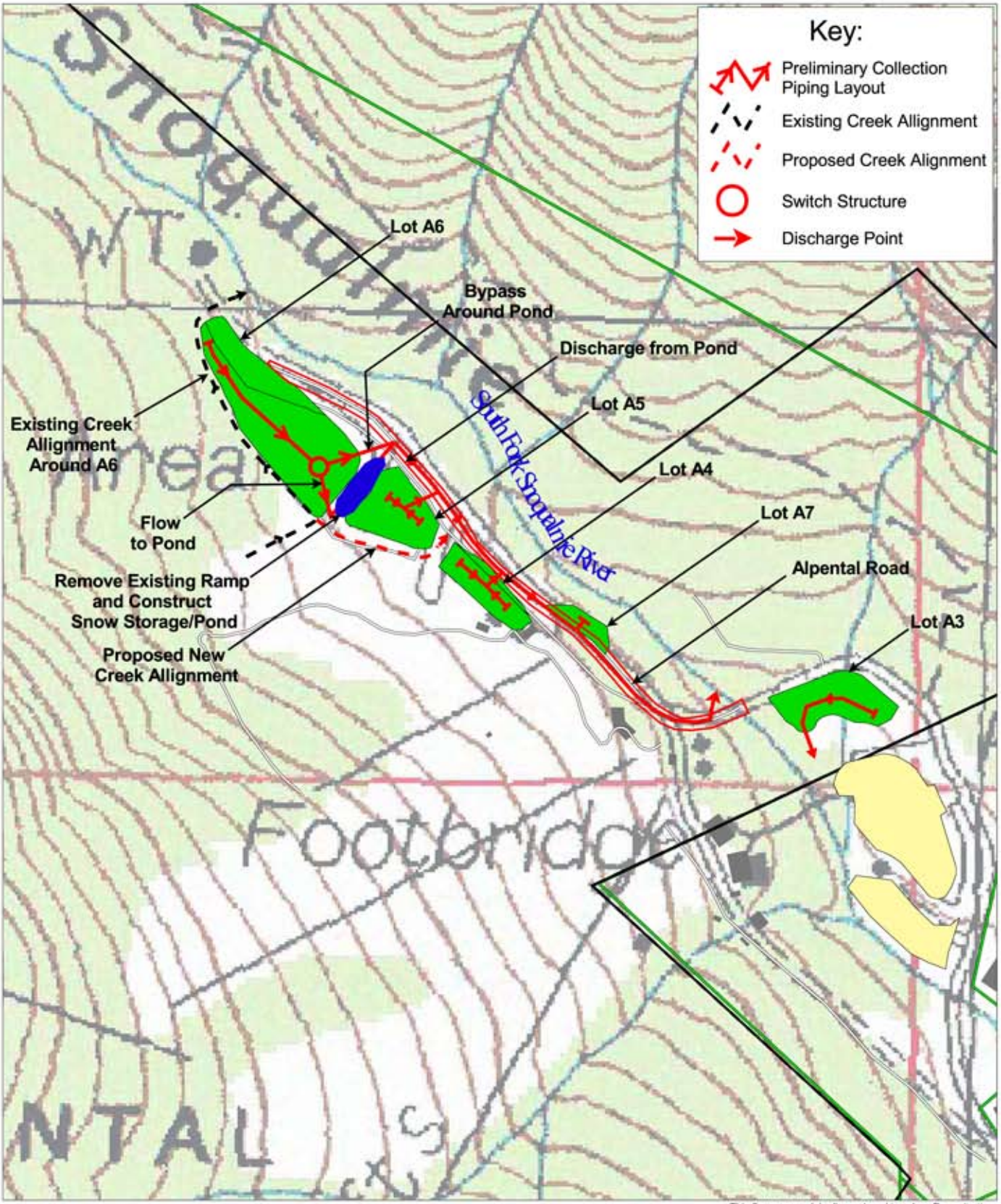

This figure was originally produced in color. Reproduction in black and white may result in loss of information.

LEGEND

- Parking Lot - proposed modifications
- Parking Lot - existing and proposed Area
- Parking Lot - Existing
- Building
- Land Allocation
- Stream
- SUP Boundary
- Road

0 400

Scale 1" = 400 Feet

Map Projection: Washiongton State Plane, South Zone, NAD 83.

Source: SE Group, USGS

N

SUMMIT AT SNOQUALMIE STORMWATER MANAGEMENT PLAN

Alpental Parking Lots Conceptual SMP Facility Layout

Drawn: RMT	Revision: 4	Date: May 4, 2004	Figure: 4

0231209100_102903.apr

Golder Associates

DRAWINGS

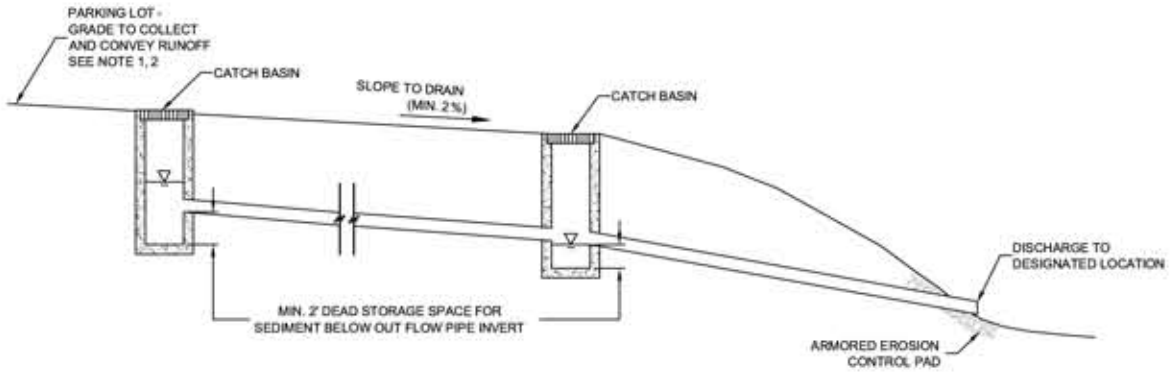

1/1000 **B1 - BASIC TREATMENT TRAIN 1**

NOT TO SCALE

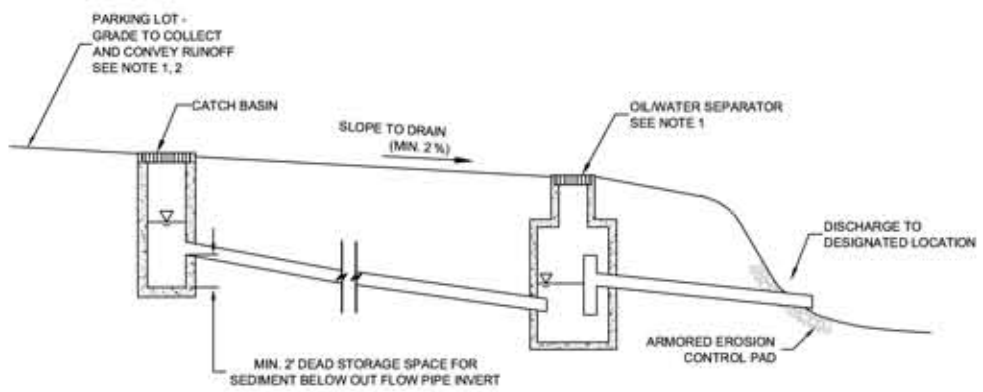

2/1000 **B2 - BASIC TREATMENT TRAIN 2**

NOT TO SCALE

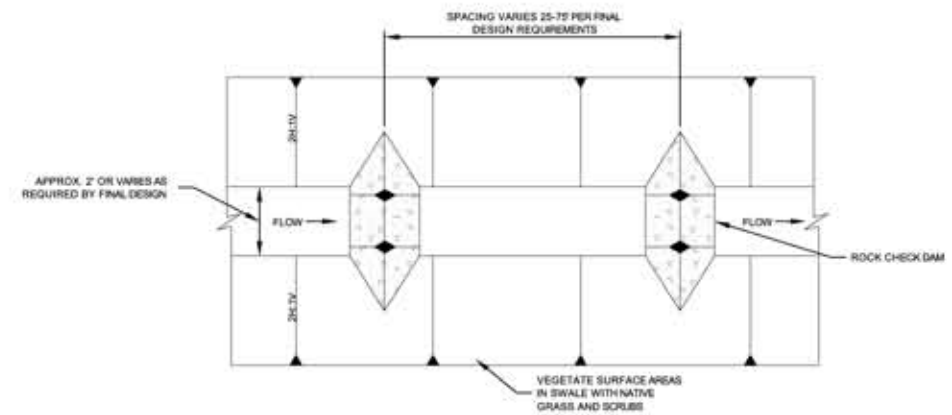

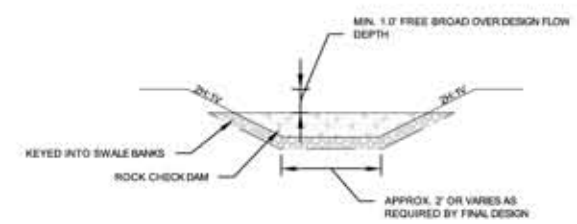

3/1000 **B3 - BIOSWALE AT DISCHARGE**

NOT TO SCALE

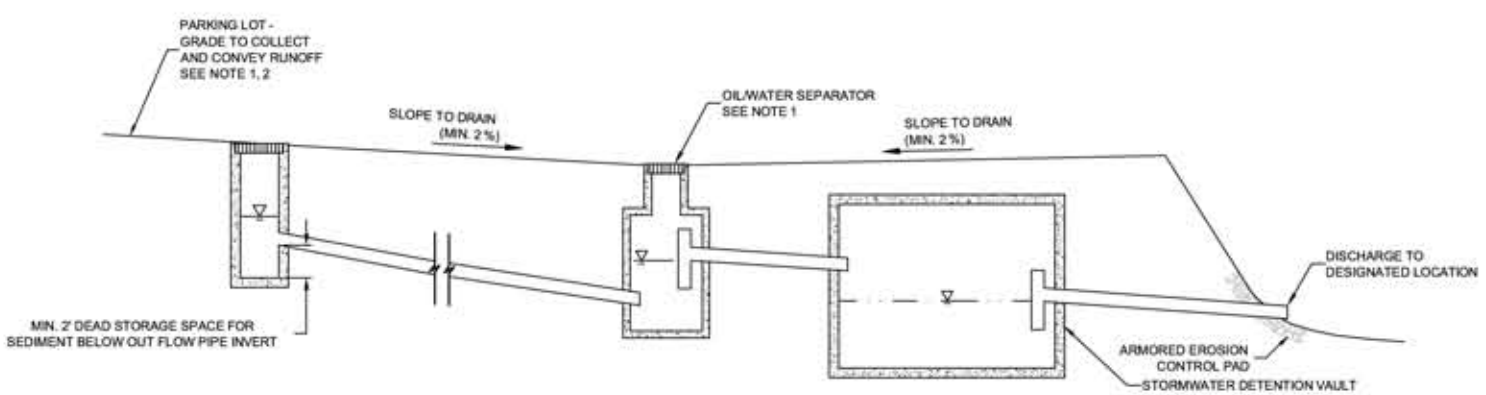

4/1000 **E1 - ENHANCED TREATMENT TRAIN AND UNDERGROUND VAULT**

NOT TO SCALE

NOTES:

1. FINAL CONFIGURATION TO BE DETERMINED IN THE FINAL DESIGN.
2. PARKING LOT GRADED PER ALTERNATIVES ON DRAWING 1000.
3. SWALES ONLY PROPOSED AT SILVER FIR AND SW2 (MAINT) AREAS.

Golder Associates
GOLDER ASSOCIATES INC.
18300 NE UNION HILL ROAD, SUITE 200
REDMOND, WA USA 98052-3333
TEL: (425) 883-0777
FAX: (425) 882-5498

REV	DATE	DES	REVISION DESCRIPTION	CADD	CHK	RVW

PROJECT: SE GROUP/ SNOQUALMIE PASS SMP/WA

TITLE: CONCEPTUAL STORMWATER MANAGEMENT TREATMENT TRAIN ALTERNATIVES

PROJECT No.	023-1209.000	
FILE No.	0231209000C01	
REV. 0	SCALE	AS SHOWN
DESIGN	AGK	–
CADD	SMB	4/19/04
CHECK	CWL	–
REVIEW	CWL	–

DRAWING 1000

K:\CAD\Projects\2002\0231209\1000\0231209000C01.dwg 06/04/2004, 11:13 Layout: 1000

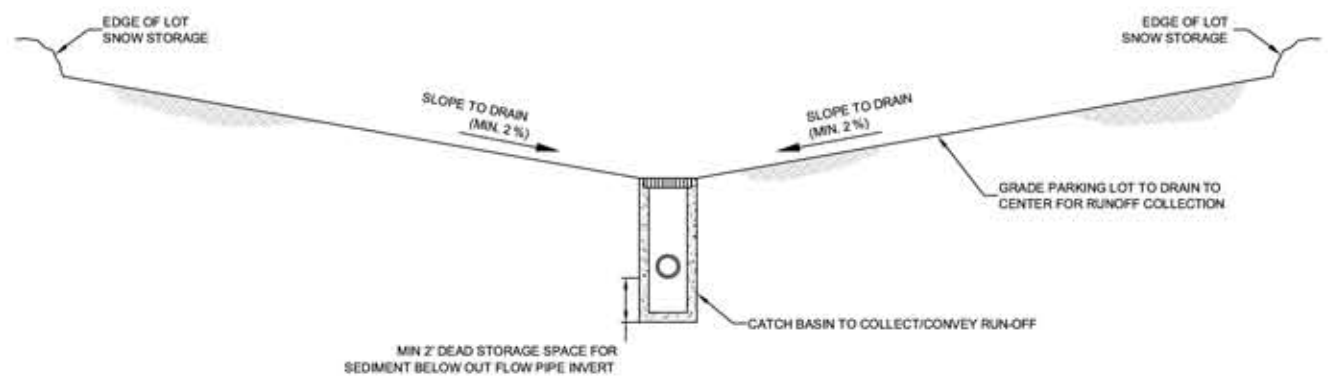

1 / 1010 **REVERSE CROWN PARKING LOT GRADING ALTERNATIVE**

NOT TO SCALE

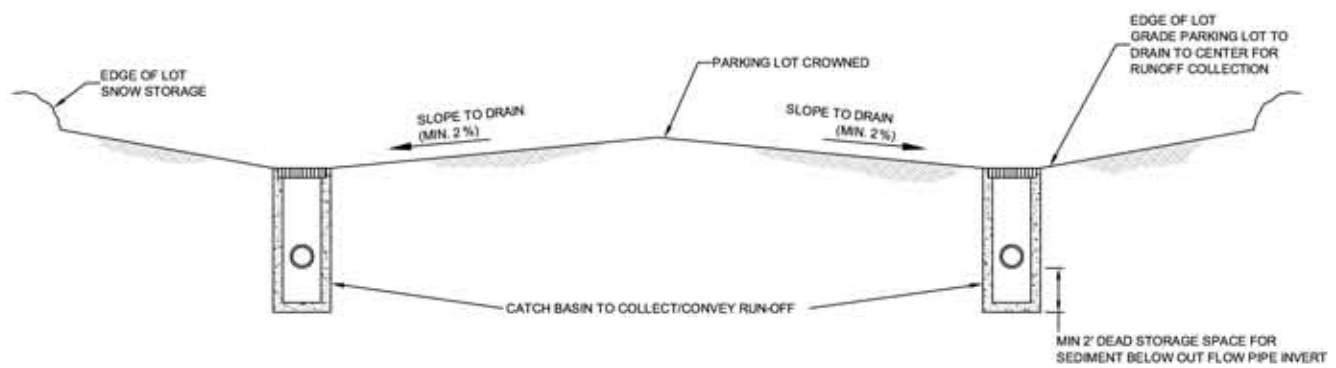

2 / 1010 **CROWNED PARKING LOT GRADING ALTERNATIVE**

NOT TO SCALE

Golder Associates
GOLDER ASSOCIATES INC.
18300 NE UNION HILL ROAD, SUITE 200
REDMOND, WA USA 98052-3333
TEL: (425) 883-0777
FAX: (425) 882-5498

REV	DATE	DES	REVISION DESCRIPTION	CADD	CHK	RVW

PROJECT: **SE GROUP/ SNOQUALMIE PASS SMP/WA**

TITLE: **CONCEPTUAL PARKING LOT GRADING ALTERNATIVES**

PROJECT No.	023-1209.000	
FILE No.	0231209000C01	
REV. 0	SCALE	AS SHOWN
DESIGN	AGK	–
CADD	SMB	4/19/04
CHECK	CWL	–
REVIEW	CWL	–

DRAWING 1010

K:\CAD\Projects\2002\0231209\000\0231209000C01.dwg 06/04/2004, 11:13 Layout: 1010

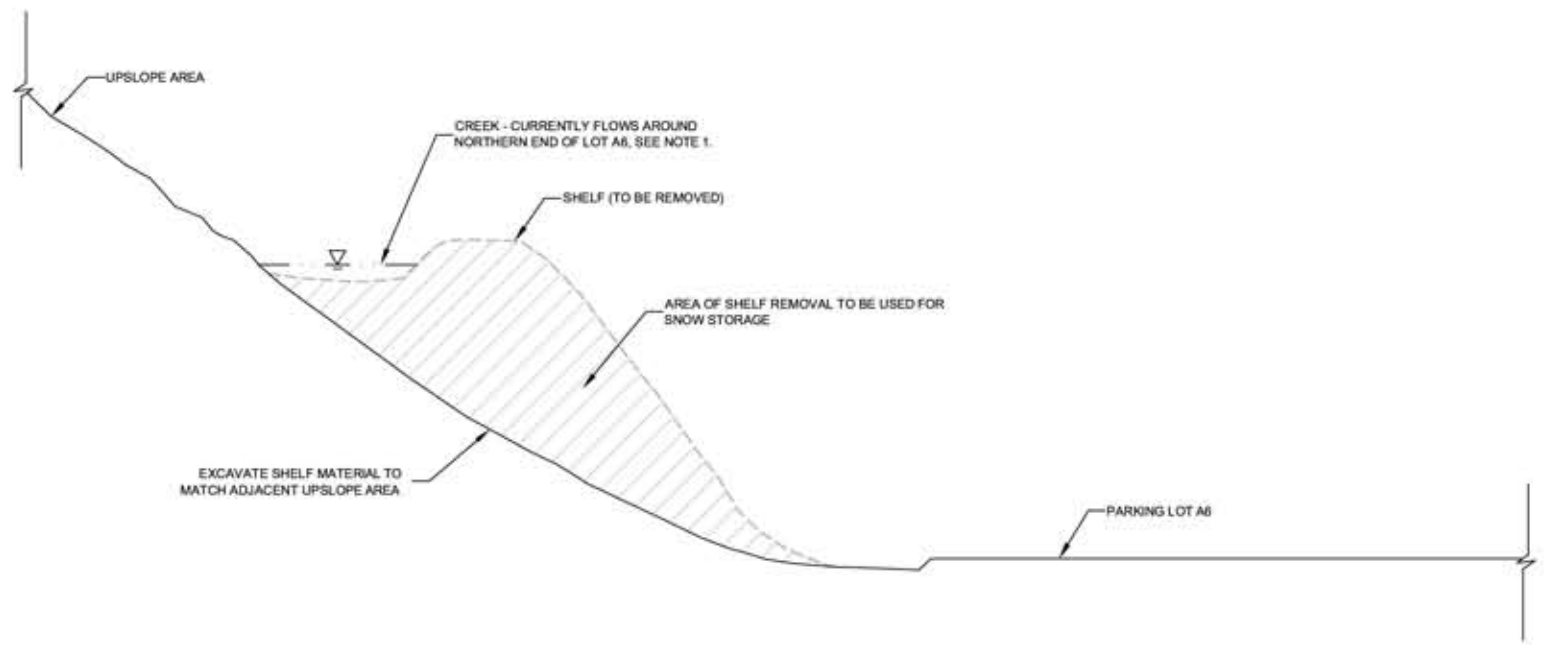

NOTE: VIEW LOOKING NORTH ALONG WEST EDGE OF LOT A6

1/1020 **CONCEPTUAL CROSS-SECTION OF LOT A6 CREEK SHELF REMOVAL**

NOT TO SCALE

NOTE: CREEK TO BE RELOCATED AROUND LOT 5, SEE FIGURE 4, AND REFER TO SECTION 4.1.1 IN REPORT FOR DESCRIPTION OF PROPOSED WORK.

K:\CAD\Projects\2002\0231209\000\0231209000C01.dwg 06/04/2004, 11:12 Layout:1020

Golder Associates
GOLDER ASSOCIATES INC.
18300 NE UNION HILL ROAD, SUITE 200
REDMOND, WA USA 98052-3333
TEL: (425) 883-0777
FAX: (425) 882-5498

REV	DATE	DES	REVISION DESCRIPTION	CADD	CHK	RVW

PROJECT: **SE GROUP/ SNOQUALMIE PASS SMP/WA**

TITLE: **CONCEPTUAL CROSS-SECTION OF LOT A6 CREEK SHELF REMOVAL**

PROJECT No. 023-1209.000		
FILE No. 0231209000C01		
REV. 0	SCALE	AS SHOWN
DESIGN	AQK	–
CADD	SMB	4/19/04
CHECK	CWL	–
REVIEW	CWL	–

DRAWING 1020

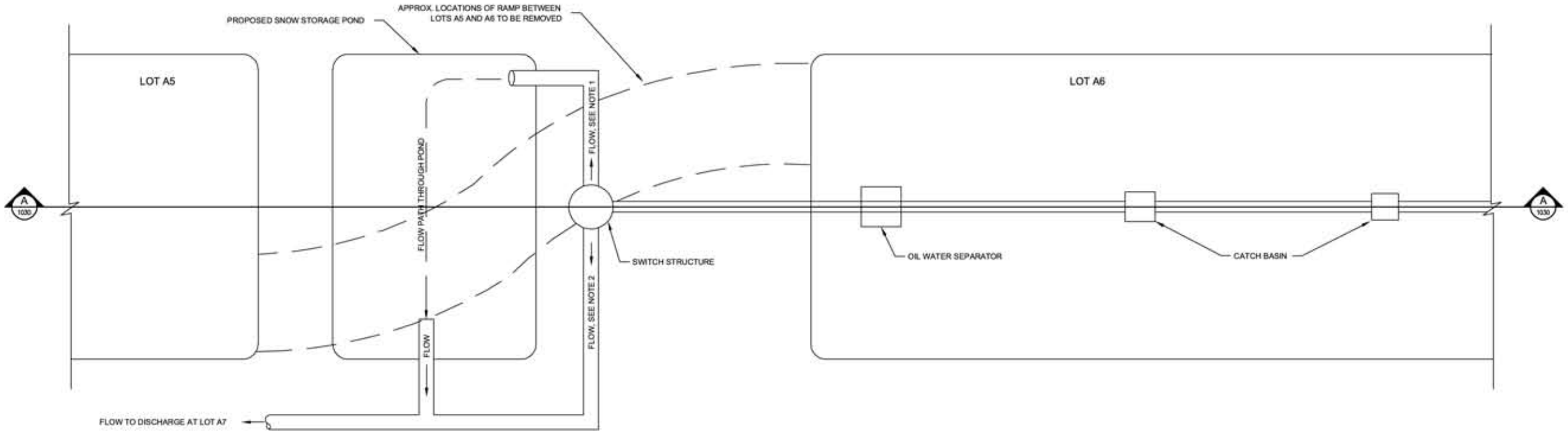

NOTES:

1) FLOWS FROM LOT A6 PASS THROUGH POND (SEE 1 BELOW) BEFORE FLOWING TO DISCHARGE AT LOT A7.

2) FLOWS BY-PASS POND (SEE 2 BELOW) AND FLOW DIRECTLY TO DISCHARGE AT LOT A7.

1
1030

PARKING LOTS A5/A6 POND AND SWITCH STRUCTURE CONCEPTUAL PLAN VIEW

NOT TO SCALE

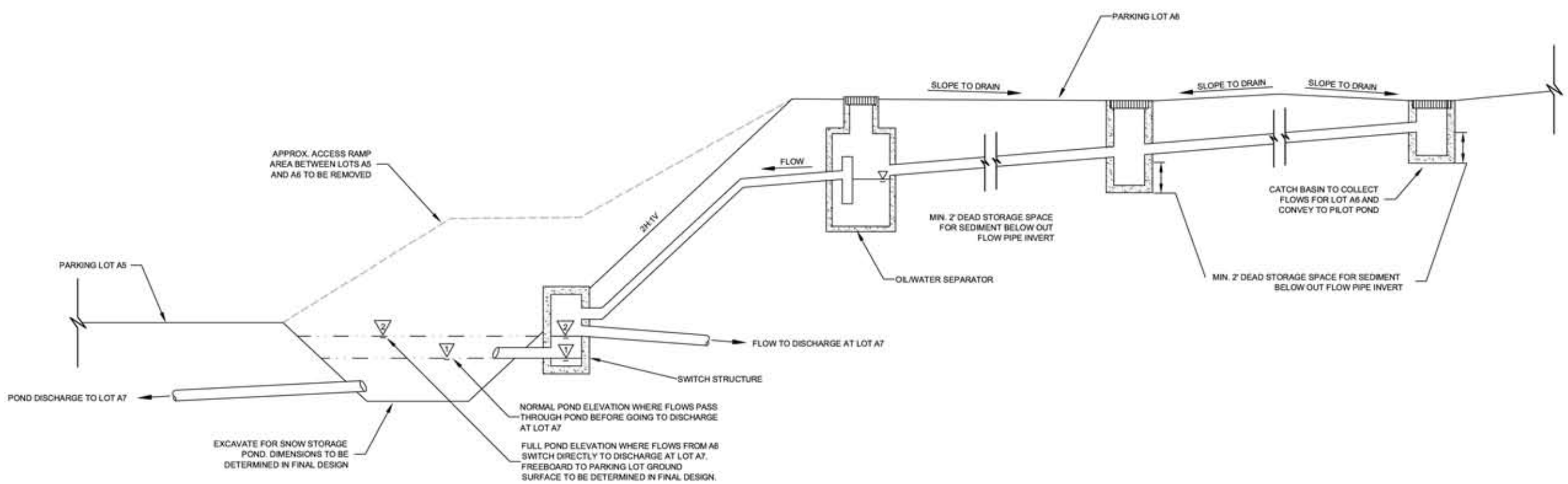

A
1030

PARKING LOTS A5/A6 POND AND SWITCH STRUCTURE CONCEPTUAL CROSS-SECTION

NOT TO SCALE

Golder Associates
GOLDER ASSOCIATES INC.
18300 NE UNION HILL ROAD, SUITE 200
REDMOND, WA USA 98052-3333
TEL: (425) 883-0777
FAX: (425) 882-5498

REV	DATE	DES	REVISION DESCRIPTION	CADD	CHK	RVW

PROJECT: SE GROUP/ SNOQUALMIE PASS SMP/WA

TITLE: CONCEPTUAL LAYOUT FOR POND AND SWITCH STRUCTURE

PROJECT No.	023-1209.000	
FILE No.	0231209000C01	
REV. 0	SCALE	AS SHOWN
DESIGN	AGK	–
CADD	SMB	4/19/04
CHECK	CWL	–
REVIEW	CWL	–

DRAWING 1030

K:\CAD\Projects\2002\0231209\000\0231209000C01.dwg 06/04/2004, 11:11 Layout:1030

APPENDIX A

CONCEPTUAL DESIGN CALCULATIONS

APPENDIX A

TECHNICAL APPROACH AND CALCULATIONS FOR VAULT AND SWALE DESIGN

As described in the conceptual design for the stormwater management plan, quantity control (detention and peak flow attenuation) of stormwater runoff is provided for parking lot areas that increase in size (Summit West Lot 1). Quantity control (treatment for sediment and hydrocarbons) is provided for all parking lots. Quantity control would be provided through the use of underground stormwater vaults. Quality control would be provided through a combination of oil/water separators (OWS) and swales.

A hydrologic analysis was performed of each parking lot area for both existing conditions, and proposed modifications. The results from these analyses were used in the design of stormwater vaults and swales. Of all parking lot areas, only Lot SW 1 (Upper Portion) is proposed to increase in size; therefore, a stormwater vault was conceptually designed for this parking lot.

The following technical analysis is preliminary, and intended to support proposed conceptual designs. Final design of stormwater facilities should be completed at the time of final SMP design, based in detailed site specific survey information and the most current inventory of existing conditions. The following conceptual design calculations are intended to provide a preliminary understanding for feasibility and general sizing of proposed facilities.

Hydrology

Hydrologic parameters used in analysis such as curve number and time of concentration (lag time) were determined for existing and proposed conditions for each lot. Parking lot areas were delineated by GIS and confirmed by SE Group. Parking lot SW 2 was separated into three segments for the hydrologic analysis: the Maintenance Lot, the South Lot and the North Lot. SW 1 was separated into two segments: Upper and Lower.

The parameters and basin characteristics were input into HEC-HMS 2.2.1, a hydrologic modeling program developed by the Army Corp of Engineers. The SCS Curve Number Method was used, with a Type 1A storm distribution. See Table A.1 for input parameters for existing conditions, and Table A.2 for the proposed condition.

TABLE A.1

Hydrologic Parameters for Existing Condition

Parking Lot	Area (acres)	Curve Number	SCS Lag Time (Min.)
SF 1	1.72	89	1.9
SW 2 (Maint.)	0.74	89	2.3
SW 2 (South)	1.80	89	6.7
SW 2 (North)	1.80	89	4.4
SW 1 (Upper)	3.50	89	4.8
SW 1 (Lower)	1.70	89	4.0
Lot 7	0.20	89	1.7
Lot 6	2.50	89	4.4
Lot 5	0.85	89	2.1
Lot 4	0.60	89	2.2
Lot 3	0.91	89	2.7
Alpental Road	0.87	89	2.8

NOTE: The existing condition of SW1 has three total lots; the lower lot referenced as SW1(Lower) and two upper lots that have been combined for these calculations and referenced as SW1(Upper). This convention applies to references made in the calculations package and in Tables A.1, A.2, A.4 and A.5.

TABLE A.2

Hydrologic Parameters for Proposed Condition

Parking Lot	Area (acres)	Curve Number	SCS Lag Time (Min.)
SF 1	1.72	98	2.7
SW 2 (Maint.)	0.74	98	2.6
SW 2 (South)	1.80	98	7.8
SW 2 (North)	1.80	98	5.2
SW 1 (Upper)	6.30	98	3.0
SW 1 (Lower)	1.70	98	2.6
Lot 7	0.20	98	1.7
Lot 6	2.50	98	1.9
Lot 5	0.85	98	2.1
Lot 4	0.60	98	2.2
Lot 3	0.91	98	2.7
Alpental Road	0.87	98	2.8

NOTE: The existing condition of SW1 has three total lots; the lower lot referenced as SW1(Lower) and two upper lots that have been combined for these calculations and referenced as SW1(Upper). This convention applies to references made in the calculations package and in Tables A.1, A.2, A.4 and A.5.

Peak flows and volumes were determined from the NOAA Atlas 2 for the following storm events: 2-year, 24-hour; 10-year, 24-hour; 25-year, 24-hour; 50-year, 24-hour; and 100-year, 24-hour. See the following table for storm precipitation values.

TABLE A.3

Storm Events

Storm Event	Precipitation (inches)
2-yr, 24-hr	3.5
10-yr, 24-hr	4.0
25-yr, 24-hr	5.5
50-yr, 24-hr	6.0
100-yr, 24-hr	6.5

Results from Hydrologic Analysis

The results from the HEC-HMS model for the various storm events for both existing and proposed conditions are shown in Tables A.4 and A.5, respectively.

TABLE A.4

Peak Runoff Values (cfs) for Existing Conditions

Parking Lot	2-yr, 24-hr	10-yr, 24-hr	25-yr, 24-hr	50-yr, 24-hr	100-yr, 24-hr
SF 1	1.02	1.22	1.86	2.07	2.28
SW 2 (Maint.)	0.44	0.53	0.80	0.89	0.98
SW 2 (South)	1.04	1.26	1.91	2.13	2.35
SW 2 (North)	1.06	1.28	1.93	2.15	2.37
SW 1 (Upper)	2.06	2.49	3.78	4.21	4.64
SW 1 (Lower)	1.00	1.21	1.84	2.05	2.25
Lot 7	0.12	0.14	0.22	0.24	0.27
Lot 6	1.47	1.78	2.69	3.00	3.31
Lot 5	0.50	0.61	0.92	1.02	1.13
Lot 4	0.35	0.43	0.65	0.72	0.80
Lot 3	0.54	0.65	0.98	1.09	1.20
Alpental Road	0.51	0.62	0.94	1.05	1.15

NOTE: The existing condition of SW1 has three total lots; the lower lot referenced as SW1(Lower) and two upper lots that have been combined for these calculations and referenced as SW1(Upper). This convention applies to references made in the calculations package and in Tables A.1, A.2, A.4 and A.5.

TABLE A.5

Peak Runoff Values (cfs) for Proposed Conditions

Parking Lot	2-yr, 24-hr	10-yr, 24-hr	25-yr, 24-hr	50-yr, 24-hr	100-yr, 24-hr
SF 1	1.40	1.60	2.20	2.40	2.6
SW 2 (Maint.)	0.60	0.69	0.95	1.03	1.12
SW 2 (South)	1.44	1.64	2.26	2.46	2.67
SW 2 (North)	1.45	1.66	2.29	2.49	2.70
SW 1 (Upper)	5.12	5.85	8.04	8.77	9.50
SW 1 (Lower)	1.38	1.58	2.17	2.37	2.57
Lot 7	0.16	0.19	0.26	0.28	0.30
Lot 6	2.03	2.32	3.19	3.48	3.77
Lot 5	0.69	0.79	1.09	1.19	1.28
Lot 4	0.49	0.56	0.77	0.84	0.91
Lot 3	0.74	0.84	1.16	1.27	1.37
Alpental Road	0.71	0.81	1.11	1.21	1.31

NOTE: The existing condition of SW1 has three total lots; the lower lot referenced as SW1(Lower) and two upper lots that have been combined for these calculations and referenced as SW1(Upper). This convention applies to references made in the calculations package and in Tables A.1, A.2, A.4 and A.5.

Vault Design

A preliminary vault design was completed for Lot SW 1 (Upper). Currently, only SW1 (Upper) would increase in size. The vaults would provide detention for peak stormwater flows per applicable regulations (see Section 2.0). The primary objective of detention is as follows:

- Detain flows such that the allowed discharge during the 2-year, 24-hour event after development is equal to or less than 1/2 of the pre-developed (existing) 2-yr, 24-hour event; and,
- Detain flows such that the allowed discharge during the 100-year, 24-hour event after development is equal to or less than the pre-developed 100-yr, 24-hour event.

Vaults were sized using the reservoir routing function in HEC-HMS. A preliminary estimate of stage-storage curve for the vault is developed and entered into the model, along with appropriate outlet structure elevations and sizes. An orifice was used to discharge low flows, and an overflow weir was used to discharge higher flows. An emergency spillway was also provided.

The results from the storm hydrographs for the developed condition for each lot were specified in the model and the discharge out of the vault is calculated. The vault volume and outlet structure elevation/sizes are then manually iterated until the allowable discharges were achieved for the various storm events, while keeping the vault volume as small as possible.

Vaults were designed to be 20 feet wide (standard panel vault width), 7 feet deep, and the length needed for each lot was calculated. Each vault provides 0.5 feet of freeboard.

Swale Design

Swales were designed for the treatment of sediments for two lots: SF 1 and SW 2 (Maintenance Lot). Swale design procedure and criteria from the King County Surface Water Design Manual (1998) were used. Swales are designed to treat the 'water quality' storm and convey the 100-year event. The water quality storm is defined by the manual as 60% of the 2-year, 24-hour event.

Design criteria such as bottom length, slope of channel, depth of water, velocity of flow, and side slopes must be maintained per the manual. The following table illustrates the required design criteria used:

TABLE A.6

Design Criteria for Swales

Swale Criteria	Required Value
Max. Flow Depth	0.33 feet (based on no-mowing)
Max. Flow Velocity	1.0 feet per second
Min. Bottom Width	2.0 feet
Manning's 'n'	0.2 (low flow conditions)
Channel Slope	0.01 – 0.06 ft/ft
Channel x-sec Shape	Trapezoidal
Side Slopes	2:1 H:V (Maximum)
Min. Swale Length	100 feet

Based on these design criteria, swales were sized for the water quality flow in FlowMaster (Haestad Methods). Once a size of swale was determined that met the criteria, the 100-year peak flow was checked to ensure conveyance through the swale.

Swales would have check dams installed every 100 feet (dependant upon slope of channel) to provide additional trapping of sediments.

Calculated by: CC
Checked by: AQK

023-1209.000

Snoqualmie HEC-HMS Results

2-year, 24-hour	Peak Q cfs	Time to Peak hrs	Volume ac-ft
Lot SF 1 - Existing	1.02	8.0	0.34
Lot SF 1 - Proposed	1.40	8.0	0.50
Lot SW 2 (South) - Existing	1.04	8.0	0.35
Lot SW 2 (South) - Proposed	1.44	8.0	0.52
Lot SW 2 (North) - Existing	1.06	8.0	0.35
Lot SW 2 (North) - Proposed	1.45	8.0	0.52
Lot SW 2 (Maint) - Existing	0.44	8.0	0.15
Lot SW 2 (Maint) - Proposed	0.60	8.0	0.22
Lot SW 1 Upper - Existing	2.06	8.0	0.69
Lot SW 1 Upper - Proposed	5.12	8.0	1.84
Lot SW 1 Lower - Existing	1.00	8.0	0.33
Lot SW 1 Lower - Proposed	1.38	8.0	0.50

10-yr, 24-hr	Peak Q cfs	Time to Peak hrs	Volume ac-ft
Lot SF 1 - Existing	1.22	8.0	0.40
Lot SF 1 - Proposed	1.60	8.0	0.57
Lot SW 2 (South) - Existing	1.26	8.0	0.42
Lot SW 2 (South) - Proposed	1.64	8.0	0.60
Lot SW 2 (North) - Existing	1.28	8.0	0.42
Lot SW 2 (North) - Proposed	1.66	8.0	0.60
Lot SW 2 (Maint) - Existing	0.53	8.0	0.17
Lot SW 2 (Maint) - Proposed	0.69	8.0	0.25
Lot SW 1 Upper - Existing	2.49	8.0	0.82
Lot SW 1 Upper - Proposed	5.85	8.0	2.10
Lot SW 1 Lower - Existing	1.21	8.0	0.40
Lot SW 1 Lower - Proposed	1.58	8.0	0.57

25-yr, 24-hr	Peak Q cfs	Time to Peak hrs	Volume ac-ft
Lot SF 1 - Existing	1.86	8.0	0.61
Lot SF 1 - Proposed	2.20	8.0	0.79
Lot SW 2 (South) - Existing	1.91	8.0	0.63
Lot SW 2 (South) - Proposed	2.26	8.0	0.82
Lot SW 2 (North) - Existing	1.93	8.0	0.63
Lot SW 2 (North) - Proposed	2.29	8.0	0.82
Lot SW 2 (Maint) - Existing	0.80	8.0	0.26
Lot SW 2 (Maint) - Proposed	0.95	8.0	0.34
Lot SW 1 Upper - Existing	3.78	8.0	1.24
Lot SW 1 Upper - Proposed	8.04	8.0	2.89
Lot SW 1 Lower - Existing	1.84	8.0	0.60
Lot SW 1 Lower - Proposed	2.17	8.0	0.78

50-yr, 24-hr	Peak Q cfs	Time to Peak hrs	Volume ac-ft
Lot SF 1 - Existing	2.07	8.0	0.68

Calculated by: CC
Checked by: AQK

023-1209.000

Lot SF 1 - Proposed	2.40	8.0	0.86
Lot SW 2 (South) - Existing	2.13	8.0	0.71
Lot SW 2 (South) - Proposed	2.46	8.0	0.90
Lot SW 2 (North) - Existing	2.15	8.0	0.71
Lot SW 2 (North) - Proposed	2.49	8.0	0.90
Lot SW 2 (Maint) - Existing	0.89	8.0	0.29
Lot SW 2 (Maint) - Proposed	1.03	8.0	0.37
Lot SW 1 Upper - Existing	4.21	8.0	1.38
Lot SW 1 Upper - Proposed	8.77	8.0	3.15
Lot SW 1 Lower - Existing	2.05	8.0	0.67
Lot SW 1 Lower - Proposed	2.37	8.0	0.85

100-yr, 24-hr	**Peak Q cfs**	**Time to Peak hrs**	**Volume ac-ft**
Lot SF 1 - Existing	2.28	8.0	0.75
Lot SF 1 - Proposed	2.60	8.0	0.93
Lot SW 2 (South) - Existing	2.35	8.0	0.78
Lot SW 2 (South) - Proposed	2.67	8.0	0.97
Lot SW 2 (North) - Existing	2.37	8.0	0.78
Lot SW 2 (North) - Proposed	2.70	8.0	0.97
Lot SW 2 (Maint) - Existing	0.98	8.0	0.32
Lot SW 2 (Maint) - Proposed	1.12	8.0	0.40
Lot SW 1 Upper - Existing	4.64	8.0	1.52
Lot SW 1 Upper - Proposed	9.50	8.0	3.41
Lot SW 1 Lower - Existing	2.25	8.0	0.74
Lot SW 1 Lower - Proposed	2.57	8.0	0.92

Calculated by: CC
Checked by: AQK

023-1209.000

Golder Associates Inc.

Basin Hydrology - Parking Lot SF 1

Site Description:

The site consists of a small gravel parking lot, approximtately 1.72 acres in size, and is fairly flat. The parking lot straddles a property line between private land and public land. This calculation covers only the public portion of the parking lot. The lot is located to the southwest of SR 906, near the Summit Central Ski Area.

Input to Hydrology Model:

Model Used: HEC-HMS

See Time of Concentration sheet for additional calculations

Basin Model Parameters:

SCS Curve Number Method used

	EXISTING	*PROPOSED*	
Lot Area (ac)	1.72	1.72	
CN	89	98	
Initial Loss (in.)	0.25	0.04	*Initial Loss = 0.2((1000/CN)-10)*
% Impervious	0.0%	100.0%	
SCS Lag (0.6*Tc)	1.9	2.7	*See Time of Concentration Calcs - Same Tc for both cases*

Meteorological Model Parameters:

Model Used: SCS Hypothetical Storm

Storm Type: Type Ia Storm

Storm Events

Event	*Precip (in.)*
2-yr, 24-hr	3.5
10-yr, 24-hr	4.0
25-yr, 24-hr	5.5
50-yr, 24-hr	6.0
100-yr, 24-hr	6.5

Calculated by: CC
Checked by: AQK

023-1209.000

Golder Associates Inc.

Time of Concentration Calculation - Lot SF 1

The sum of the travel times for sheet flow, shallow concentrated flow and channel flow.

The time of concentration for existing and proposed scenarios is assumed to be the same.

Sheet Flow

T_{sheet} (minutes) =[$0.42(n_s L)^{0.8}$]/[$(P_2)^{0.527} * S^{0.4}$]

Where:

ns =	*Sheet flow Manning's n*
L =	*flow length (ft) up to 300 feet*
P2 =	*2-year, 24-hour rainfall (in.)*
S =	*Slope of hydraulic grade line (land slope), ft/ft*

Site Data:

ns =	0.011	Smooth surfaces (asphalt, gravel, packed soil)
L =	200	feet
P_2 =	3.5	From W. WA Precipitation Maps and King County Surface Design Manual
S =	0.01	sheet flow slope, ft/ft
T_{sheet} =	**2.57**	**minutes**

Shallow Concentrated Flow:

After a maximum of 300 feet, sheet flow assumes to become shallow concentrated flow.

$T_{shallow}$ = Length of sheet flow/V

$V = k(s)^{0.5}$

Where:

V =	*Velocity (ft/s)*
k =	*time of concentration velocity factor (ft/s)*
s =	*slope of flow path (ft/ft)*

Site Data:

k =	27	Paved and gravel areas
s =	0.01	ft/ft
V =	2.70	ft/s
Length of flow path =	50	ft
Time of flow =	**0.31**	**minutes**

Open Channel Flow

Same equation as above, with different k value

Where

k =	21	CMP Pipe
s =	0.010	ft/ft
V =	2.10	ft/s
L =	200.00	ft
Time of flow =	**1.59**	**minutes**

Calculated by: CC
Checked by: AQK

023-1209.000

Time of Concentration for Basin:

T_{sheet}	2.57 minutes
$T_{shallow}$	0.31 minutes
$T_{channel}$	1.59 minutes
TOTAL Tc	**4 minutes**

Calculated by: CC
Checked by: AQK

023-1209.000

Golder Associates Inc.

Basin Hydrology - Parking Lot SW 2

Site Description:

The site consists of a long, narrow gravel parking lot. For hydrologic calculations, the lot is broken into a southern, northern, and maintenance lot. The total area of the lot is approx. 4.34 acres, and the southern and northern portions are approximately the same area, but the southern side is steeper. This lot is located off SR 906, near the Summit West Ski Area.

Input to Hydrology Model:

Model Used: HEC-HMS

See Time of Concentration sheet for additional calculations

Basin Model Parameters (Southern Portion)

SCS Curve Number Method used

	EXISTING	*PROPOSED*	
Lot Area (ac)	1.80	1.80	
CN	89	98	
Initial Loss (in.)	0.25	0.04	*Initial Loss = 0.2((1000/CN)-10)*
% Impervious	0.0%	100.0%	
SCS Lag (0.6*Tc)	6.7	7.8	*See Time of Concentration Calcs*

Basin Model Parameters (Northern Portion)

SCS Curve Number Method used

	EXISTING	*PROPOSED*	
Lot Area (ac)	1.80	1.80	
CN	89	98	
Initial Loss (in.)	0.25	0.04	*Initial Loss = 0.2((1000/CN)-10)*
% Impervious	0.0%	100.0%	
SCS Lag (0.6*Tc)	4.4	5.2	*See Time of Concentration Calcs*

Basin Model Parameters (Maintenance Lot)

SCS Curve Number Method used

	EXISTING	*PROPOSED*	
Lot Area (ac)	0.74	0.74	
CN	89	98	
Initial Loss (in.)	0.25	0.04	*Initial Loss = 0.2((1000/CN)-10)*
% Impervious	0.0%	100.0%	
SCS Lag (0.6*Tc)	2.3	2.6	*See Time of Concentration Calcs*

Meteorological Model Parameters:

Model Used: SCS Hypothetical Storm

Storm Type: Type Ia Storm

Storm Events

Event	*Precip (in.)*
2-yr, 24-hr	3.5
10-yr, 24-hr	4.0
25-yr, 24-hr	5.5
50-yr, 24-hr	6.0
100-yr, 24-hr	6.5

Calculated by: CC
Checked by: AQK

023-1209.000

Golder Associates Inc.

Time of Concentration Calculation - SW LOT 2 (South) Existing

The sum of the travel times for sheet flow, shallow concentrated flow and channel flow.

The time of concentration flow path was determined to be the longest possible flow travel time for this basin. The flow path assumed follows the length of the southern portion of the lot, and is then conveyed in a ditch to the end of the northern portion of lot 2.

Sheet Flow

T_{sheet} (minutes) =[$0.42(n_s L)^{0.8}$]/[$(P_2)^{0.527} * S^{0.4}$]

Where:

ns =	*Sheet flow Manning's n*
L =	*flow length (ft) up to 300 feet*
P2 =	*2-year, 24-hour rainfall (in.)*
S =	*Slope of hydraulic grade line (land slope), ft/ft*

Site Data:

ns =	0.011	Smooth surfaces (asphalt, gravel, packed soil)
L =	300	feet
P_2 =	3.5	From W. WA Precipitation Maps and King County Surface Design Manual
S =	0.01	sheet flow slope, ft/ft
T_{sheet} =	**3.56**	**minutes**

Shallow Concentrated Flow:

After a maximum of 300 feet, sheet flow assumes to become shallow concentrated flow.

$T_{shallow}$ = Length of sheet flow/V

$V = k(s)^{0.5}$

Where:

V =	*Velocity (ft/s)*
k =	*time of concentration velocity factor (ft/s)*
s =	*slope of flow path (ft/ft)*

Site Data:

k =	27	Paved and gravel areas
s =	0.03	ft/ft
V =	4.68	ft/s
Length of flow path =	400	ft
Time of flow =	**1.43**	**minutes**

Shallow Concentrated Flow:

After a maximum of 300 feet, sheet flow assumes to become shallow concentrated flow.

$T_{shallow}$ = Length of sheet flow/V

$V = k(s)^{0.5}$

Where:

V =	*Velocity (ft/s)*
k =	*time of concentration velocity factor (ft/s)*
s =	*slope of flow path (ft/ft)*

Calculated by: CC
Checked by: AQK

023-1209.000

Site Data:

k =	27	Paved and gravel areas
s =	0.01	ft/ft
V =	2.70	ft/s
Length of flow path =	1000	ft
Time of flow =	**6.17**	**minutes**

Time of Concentration for Basin:

T_{sheet}	3.56	minutes
$T_{shallow}$	1.43	minutes
$T_{shallow}$	6.17	minutes
TOTAL Tc	**11**	**minutes**

Golder Associates Inc.

Time of Concentration Calculation - SW LOT 2 (South) Proposed

The sum of the travel times for sheet flow, shallow concentrated flow and channel flow.

The time of concentration flow path was determined to be the longest possible flow travel time for this basin. The flow path assumed follows the length of the southern portion of the lot, and is then conveyed in a ditch to the end of the northern portion of lot 2.

Sheet Flow

T_{sheet} (minutes) $=[0.42(n_s L)^{0.8}]/[(P_2)^{0.527} * S^{0.4}]$

Where:

ns =	*Sheet flow Manning's n*
L =	*flow length (ft) up to 300 feet*
P2 =	*2-year, 24-hour rainfall (in.)*
S =	*Slope of hydraulic grade line (land slope), ft/ft*

Site Data:

ns =	0.011	Smooth surfaces (asphalt, gravel, packed soil)
L =	300	feet
P_2 =	3.5	From W. WA Precipitation Maps and King County Surface Design Manual
S =	0.01	sheet flow slope, ft/ft
T_{sheet} =	**3.56**	**minutes**

Shallow Concentrated Flow:

After a maximum of 300 feet, sheet flow assumes to become shallow concentrated flow.

$T_{shallow}$ = Length of sheet flow/V

$V = k(s)^{0.5}$

Where:

V =	*Velocity (ft/s)*
k =	*time of concentration velocity factor (ft/s)*
s =	*slope of flow path (ft/ft)*

Site Data:

k =	27	Paved and gravel areas
s =	0.03	ft/ft
V =	4.68	ft/s
Length of flow path =	400	ft
Time of flow =	**1.43**	**minutes**

Open Channel Flow

Same equation as above, with different k value

Where

k =	21	CMP
s =	0.010	ft/ft
V =	2.10	ft/s
L =	1000.00	ft
Time of flow =	**7.94**	**minutes**

Calculated by: CC
Checked by: AQK

023-1209.000

Time of Concentration for Basin:

T_{sheet}	3.56 minutes
$T_{shallow}$	1.43 minutes
$T_{channel}$	7.94 minutes
TOTAL Tc	**13 minutes**

Calculated by: CC
Checked by: AQK

023-1209.000

Golder Associates Inc.

Time of Concentration Calculation - SW LOT 2 (North) Existing

The sum of the travel times for sheet flow, shallow concentrated flow and channel flow.

The time of concentration flow path was determined to be the longest possible flow travel time for this basin. The flow path assumed follows the length of the northern portion of the lot.

Sheet Flow

T_{sheet} (minutes) =[$0.42(n_s L)^{0.8}$]/[$(P_2)^{0.527} * S^{0.4}$]

Where:

ns =	*Sheet flow Manning's n*
L =	*flow length (ft) up to 300 feet*
P2 =	*2-year, 24-hour rainfall (in.)*
S =	*Slope of hydraulic grade line (land slope), ft/ft*

Site Data:

ns =	0.011	Smooth surfaces (asphalt, gravel, packed soil)
L =	300	feet
P_2 =	3.5	From W. WA Precipitation Maps and King County Surface Design Manual
S =	0.01	sheet flow slope, ft/ft
T_{sheet} =	**3.56**	**minutes**

Shallow Concentrated Flow:

After a maximum of 300 feet, sheet flow assumes to become shallow concentrated flow.

$T_{shallow}$ = Length of sheet flow/V

$V = k(s)^{0.5}$

Where:

V =	*Velocity (ft/s)*
k =	*time of concentration velocity factor (ft/s)*
s =	*slope of flow path (ft/ft)*

Site Data:

k =	27	Paved and gravel areas
s =	0.01	ft/ft
V =	2.70	ft/s
Length of flow path =	600	ft
Time of flow =	**3.70**	**minutes**

Open Channel Flow

Same equation as above, with different k value

Where

k =	15	Rock-lined waterway
s =	0.010	ft/ft
V =	1.50	ft/s
L =	0.00	ft
Time of flow =	**0.00**	**minutes**

Calculated by: CC
Checked by: AQK

023-1209.000

Time of Concentration for Basin:

T_{sheet}	3.56 minutes
$T_{shallow}$	3.70 minutes
$T_{channel}$	0.00 minutes
TOTAL Tc	**7 minutes**

Calculated by: CC
Checked by: AQK

023-1209.000

Golder Associates Inc.

Time of Concentration Calculation - SW LOT 2 (North) Proposed

The sum of the travel times for sheet flow, shallow concentrated flow and channel flow.

The time of concentration flow path was determined to be the longest possible flow travel time for this basin. The flow path assumed follows the length of the northern portion of the lot.

Sheet Flow

T_{sheet} (minutes) =[$0.42(n_s L)^{0.8}$]/[$(P_2)^{0.527} * S^{0.4}$]

Where:

ns =	*Sheet flow Manning's n*
L =	*flow length (ft) up to 300 feet*
P2 =	*2-year, 24-hour rainfall (in.)*
S =	*Slope of hydraulic grade line (iand slope), ft/ft*

Site Data:

ns =	0.011	Smooth surfaces (asphalt, gravel, packed soil)
L =	150	feet
P_2 =	3.5	From W. WA Precipitation Maps and King County Surface Design Manual
S =	0.01	sheet flow slope, ft/ft
T_{sheet} =	**2.04**	**minutes**

Shallow Concentrated Flow:

After a maximum of 300 feet, sheet flow assumes to become shallow concentrated flow.

$T_{shallow}$ = Length of sheet flow/V

$V = k(s)^{0.5}$

Where:

V =	*Velocity (ft/s)*
k =	*time of concentration velocity factor (ft/s)*
s =	*slope of flow path (ft/ft)*

Site Data:

k =	27	Paved and gravel areas
s =	0.01	ft/ft
V =	2.70	ft/s
Length of flow path =	700	ft
Time of flow =	**4.32**	**minutes**

Open Channel Flow

Same equation as above, with different k value

Where

k =	21	CMP Pipe
s =	0.010	ft/ft
V =	2.10	ft/s
L =	300.00	ft
Time of flow =	**2.38**	**minutes**

Calculated by: CC
Checked by: AQK

023-1209.000

Time of Concentration for Basin:

T_{sheet}	2.04 minutes
$T_{shallow}$	4.32 minutes
$T_{channel}$	2.38 minutes
TOTAL Tc	**9 minutes**

Calculated by: CC
Checked by: AQK

023-1209.000

Golder Associates Inc.

Time of Concentration Calculation - SW LOT 2 (South) Proposed

The sum of the travel times for sheet flow, shallow concentrated flow and channel flow.

The time of concentration flow path was determined to be the longest possible flow travel time for this basin. The flow path assumed follows the length of the southern portion of the lot, and is then conveyed in a ditch to the end of the northern portion of lot 2.

Sheet Flow

T_{sheet} (minutes) =[$0.42(n_s L)^{0.8}$]/[$(P_2)^{0.527} * S^{0.4}$]

Where:

ns =	*Sheet flow Manning's n*
L =	*flow length (ft) up to 300 feet*
P2 =	*2-year, 24-hour rainfall (in.)*
S =	*Slope of hydraulic grade line (land slope), ft/ft*

Site Data:

ns =	0.011	Smooth surfaces (asphalt, gravel, packed soil)
L =	300	feet
P_2 =	3.5	From W. WA Precipitation Maps and King County Surface Design Manual
S =	0.01	sheet flow slope, ft/ft
T_{sheet} =	**3.56**	**minutes**

Shallow Concentrated Flow:

After a maximum of 300 feet, sheet flow assumes to become shallow concentrated flow.

$T_{shallow}$ = Length of sheet flow/V

$V = k(s)^{0.5}$

Where:

V =	*Velocity (ft/s)*
k =	*time of concentration velocity factor (ft/s)*
s =	*slope of flow path (ft/ft)*

Site Data:

k =	27	Paved and gravel areas
s =	0.03	ft/ft
V =	4.68	ft/s
Length of flow path =	75	ft
Time of flow =	**0.27**	**minutes**

Open Channel Flow

Same equation as above, with different k value

Where

k =	21	CMP
s =	0.010	ft/ft
V =	2.10	ft/s
L =	0.00	ft
Time of flow =	**0.00**	**minutes**

Calculated by: CC
Checked by: AQK

023-1209.000

Time of Concentration for Basin:

T_{sheet}	3.56 minutes
$T_{shallow}$	0.27 minutes
$T_{channel}$	0.00 minutes
TOTAL Tc	**4 minutes**

Calculated by: CC
Checked by: AQK

023-1209.000

Golder Associates Inc.

Time of Concentration Calculation - SW LOT 2 (South) Proposed

The sum of the travel times for sheet flow, shallow concentrated flow and channel flow.

The time of concentration flow path was determined to be the longest possible flow travel time for this basin. The flow path assumed follows the length of the southern portion of the lot, and is then conveyed in a ditch to the end of the northern portion of lot 2.

Sheet Flow

T_{sheet} (minutes) =[$0.42(n_s L)^{0.8}$]/[$(P_2)^{0.527} * S^{0.4}$]

Where:

ns =	*Sheet flow Manning's n*
L =	*flow length (ft) up to 300 feet*
P2 =	*2-year, 24-hour rainfall (in.)*
S =	*Slope of hydraulic grade line (land slope), ft/ft*

Site Data:

ns =	0.011	Smooth surfaces (asphalt, gravel, packed soil)
L =	100	feet
P_2 =	3.5	From W. WA Precipitation Maps and King County Surface Design Manual
S =	0.01	sheet flow slope, ft/ft
T_{sheet} =	**1.48**	**minutes**

Shallow Concentrated Flow:

After a maximum of 300 feet, sheet flow assumes to become shallow concentrated flow.

$T_{shallow}$ = Length of sheet flow/V

$V = k(s)^{0.5}$

Where:

V =	*Velocity (ft/s)*
k =	*time of concentration velocity factor (ft/s)*
s =	*slope of flow path (ft/ft)*

Site Data:

k =	27	Paved and gravel areas
s =	0.03	ft/ft
V =	4.68	ft/s
Length of flow path =	350	ft
Time of flow =	**1.25**	**minutes**

Open Channel Flow

Same equation as above, with different k value

Where

k =	21	CMP
s =	0.010	ft/ft
V =	2.10	ft/s
L =	200.00	ft
Time of flow =	**1.59**	**minutes**

Calculated by: CC
Checked by: AQK

023-1209.000

Time of Concentration for Basin:

T_{sheet}	1.48 minutes
$T_{shallow}$	1.25 minutes
$T_{channel}$	1.59 minutes
TOTAL Tc	**4 minutes**

Calculated by: CC
Checked by: AQK

023-1209.000

Golder Associates Inc.

Basin Hydrology - Parking Lot SW 1

Site Description:

The existing site consists of three long, narrow, interconnected parking lots, seperated into an upper and lower area. The lower area will remain unchanged.
It is assumed that the existing lot drains down to the northern end of the third lot (near I-90). For the proposed condition, there will be an upper and lower basin, seperated into three equal area basins, of 2.1 acres each

Input to Hydrology Model:

Model Used: HEC-HMS

See Time of Concentration sheet for additional calculations

Basin Model Parameters - Upper Basin

SCS Curve Number Method used

	EXISTING	*PROPOSED # 1*	*PROPOSED # 2*	*PROPOSED # 3*	
Lot Area (ac)	3.50	2.10	2.10	2.10	*Three basins split into equal area*
CN	89	98	98	98	
Initial Loss (in.)	0.25	0.04	0.04	0.04	*Initial Loss = 0.2((1000/CN)-10)*
% Impervious	0.0%	100.0%	100.0%	100.0%	
SCS Lag (0.6*Tc)	4.8	3.0	1.7	1.7	*See Time of Concentration Calcs*

Basin Model Parameters - Lower Basin

SCS Curve Number Method used

	EXISTING	*PROPOSED*	
Lot Area (ac)	1.70	1.70	
CN	89	98	
Initial Loss (in.)	0.25	0.04	*Initial Loss = 0.2((1000/CN)-10)*
% Impervious	0.0%	100.0%	
SCS Lag (0.6*Tc)	4.0	2.6	*See Time of Concentration Calcs*

Meteorological Model Parameters:

Model Used: SCS Hypothetical Storm
Storm Type: Type Ia Storm

Storm Events

Event	*Precip (in.)*
2-yr, 24-hr	3.5
10-yr, 24-hr	4.0
25-yr, 24-hr	5.5
50-yr, 24-hr	6.0
100-yr, 24-hr	6.5

Calculated by: CC
Checked by: AQK

023-1209.000

Golder Associates Inc.

Time of Concentration Calculation - SW LOT 1 Existing

The sum of the travel times for sheet flow, shallow concentrated flow and channel flow.

Sheet Flow

T_{sheet} (minutes) =[$0.42(n_s L)^{0.8}$]/[$(P_2)^{0.527}*S^{0.4}$]

Where:

ns =	*Sheet flow Manning's n*
L =	*flow length (ft) up to 300 feet*
P2 =	*2-year, 24 hour rainfall (in.)*
S =	*Slope of hydraulic grade line (land slope), ft/ft*

Site Data:

ns =	0.011	Smooth surfaces (asphalt, gravel, packed soil)
L =	300	feet
P_2 =	3.5	From W. WA Precipitation Maps and King County Surface Design Manual
S =	0.01	sheet flow slope, ft/ft
T_{sheet} =	**3.56**	**minutes**

Shallow Concentrated Flow:

After a maximum of 300 feet, sheet flow assumes to become shallow concentrated flow.

$T_{shallow}$ = Length of sheet flow/V

$V = k(s)^{0.5}$

Where:

V =	*Velocity (ft/s)*
k =	*time of concentration velocity factor (ft/s)*
s =	*slope of flow path (ft/ft)*

Site Data:

k =	27	Paved and gravel areas
s =	0.02	ft/ft
V =	3.82	ft/s
Length of flow path =	1000	ft
Time of flow =	**4.36**	**minutes**

Open Channel Flow

Same equation as above, with different k value

Where

k =	10	Vegetated waterway
s =	0.020	ft/ft
V =	1.41	ft/s
L =	0.00	ft
Time of flow =	**0.00**	**minutes**

Time of Concentration for Basin:

T_{sheet}	3.56	minutes

Calculated by: CC
Checked by: AQK

023-1209.000

$T_{shallow}$	4.36 minutes
$T_{channel}$	0.00 minutes
TOTAL Tc	**8 minutes**

Calculated by: CC
Checked by: AQK

023-1209.000

Golder Associates Inc.

Time of Concentration Calculation - SW LOT 1 Existing

The sum of the travel times for sheet flow, shallow concentrated flow and channel flow.

Sheet Flow

T_{sheet} (minutes) =[$0.42(n_s L)^{0.8}$]/[$(P_2)^{0.527}*S^{0.4}$]

Where:

ns =	*Sheet flow Manning's n*
L =	*flow length (ft) up to 300 feet*
P2 =	*2-year, 24-hour rainfall (in.)*
S =	*Slope of hydraulic grade line (land slope), ft/ft*

Site Data:

ns =	0.011	Smooth surfaces (asphalt, gravel, packed soil)
L =	300	feet
P_2 =	3.5	From W. WA Precipitation Maps and King County Surface Design Manual
S =	0.01	sheet flow slope, ft/ft
T_{sheet} =	**3.56**	**minutes**

Shallow Concentrated Flow:

After a maximum of 300 feet, sheet flow assumes to become shallow concentrated flow.

$T_{shallow}$ = Length of sheet flow/V

$V = k(s)^{0.5}$

Where:

V =	*Velocity (ft/s)*
k =	*time of concentration velocity factor (ft/s)*
s =	*slope of flow path (ft/ft)*

Site Data:

k =	27	Paved and gravel areas
s =	0.02	ft/ft
V =	3.82	ft/s
Length of flow path =	700	ft
Time of flow =	**3.06**	**minutes**

Open Channel Flow

Same equation as above, with different k value

Where

k =	10	Vegetated waterway
s =	0.020	ft/ft
V =	1.41	ft/s
L =	0.00	ft
Time of flow =	**0.00**	**minutes**

Time of Concentration for Basin:

T_{sheet}	3.56	minutes

Calculated by: CC
Checked by: AQK

023-1209.000

$T_{shallow}$	3.06 minutes
$T_{channel}$	0.00 minutes
TOTAL Tc	**7 minutes**

Calculated by: CC
Checked by: AQK

023-1209.000

Golder Associates Inc.

Time of Concentration Calculation - SW LOT 1 Existing

The sum of the travel times for sheet flow, shallow concentrated flow and channel flow.

Sheet Flow

T_{sheet} (minutes) =[$0.42(n_s L)^{0.8}$]/[$(P_2)^{0.527}*S^{0.4}$]

Where:

ns =	*Sheet flow Manning's n*
L =	*flow length (ft) up to 300 feet*
P2 =	*2-year, 24-hour rainfall (in.)*
S =	*Slope of hydraulic grade line (land slope), ft/ft*

Site Data:

ns =	0.011	Smooth surfaces (asphalt, gravel, packed soil)
L =	150	feet
P_2 =	3.5	From W. WA Precipitation Maps and King County Surface Design Manual
S =	0.01	sheet flow slope, ft/ft
T_{sheet} =	**2.04**	**minutes**

Shallow Concentrated Flow:

After a maximum of 300 feet, sheet flow assumes to become shallow concentrated flow.

$T_{shallow}$ = Length of sheet flow/V

$V = k(s)^{0.5}$

Where:

V =	*Velocity (ft/s)*
k =	*time of concentration velocity factor (ft/s)*
s =	*slope of flow path (ft/ft)*

Site Data:

k =	27	Paved and gravel areas
s =	0.02	ft/ft
V =	3.82	ft/s
Length of flow path =	400	ft
Time of flow =	**1.75**	**minutes**

Open Channel Flow

Same equation as above, with different k value

Where

k =	10	Vegetated waterway
s =	0.020	ft/ft
V =	1.41	ft/s
L =	50.00	ft
Time of flow =	**0.59**	**minutes**

Time of Concentration for Basin:

T_{sheet}	2.04	minutes

Calculated by: CC
Checked by: AQK

023-1209.000

$T_{shallow}$	1.75 minutes
$T_{channel}$	0.59 minutes
TOTAL Tc	**4 minutes**

Golder Associates Inc.

Time of Concentration Calculation - SW LOT 1 Proposed

The sum of the travel times for sheet flow, shallow concentrated flow and channel flow.

Sheet Flow

T_{sheet} (minutes) =[$0.42(n_s L)^{0.8}$]/[$(P_2)^{0.527}$*$S^{0.4}$]

Where:

ns =	*Sheet flow Manning's n*
L =	*flow length (ft) up to 300 feet*
P2 =	*2-year, 24-hour rainfall (in.)*
S =	*Slope of hydraulic grade line (land slope), ft/ft*

Site Data:

ns =	0.011	Smooth surfaces (asphalt, gravel, packed soil)
L =	150	feet
P_2 =	3.5	From W. WA Precipitation Maps and King County Surface Design Manual
S =	0.02	sheet flow slope, ft/ft
T_{sheet} =	**1.55**	**minutes**

Shallow Concentrated Flow:

After a maximum of 300 feet, sheet flow assumes to become shallow concentrated flow.

$T_{shallow}$ = Length of sheet flow/V

$V = k(s)^{0.5}$

Where:

V =	*Velocity (ft/s)*
k =	*time of concentration velocity factor (ft/s)*
s =	*slope of flow path (ft/ft)*

Site Data:

k =	27	Paved and gravel areas
s =	0.02	ft/ft
V =	3.82	ft/s
Length of flow path =	300	ft
Time of flow =	**1.31**	**minutes**

Open Channel Flow

Same equation as above, with different k value

Where

k =	15	Rock-lined waterway
s =	0.020	ft/ft
V =	2.12	ft/s
L =	0.00	ft
Time of flow =	**0.00**	**minutes**

Time of Concentration for Basin:

T_{sheet} 1.55 minutes

Calculated by: CC
Checked by: AQK

023-1209.000

$T_{shallow}$	1.31 minutes
$T_{channel}$	0.00 minutes
TOTAL Tc	**3 minutes**

Alpental HEC-HMS Results

2-year, 24-hour	Peak Q cfs	Time to Peak hrs	Volume ac-ft
Lot 3 - Existing	0.54	8.0	0.178
Lot 3 - Proposed	0.74	8.0	0.265
Lot 4 - Existing	0.35	8.0	0.118
Lot 4 - Proposed	0.49	8.0	0.175
Lot 5 - Existing	0.50	8.0	0.167
Lot 5 - Proposed	0.69	8.0	0.248
Lot 6 - Existing	1.47	8.0	0.490
Lot 6 - Proposed	2.03	8.0	0.728
Lot 7 - Existing	0.12	8.0	0.039
Lot 7 - Proposed	0.16	8.0	0.058
Road - Existing	0.51	8.0	0.171
Road - Proposed	0.71	8.0	0.254

10-yr, 24-hr	Peak Q cfs	Time to Peak hrs	Volume ac-ft
Lot 3 - Existing	0.65	8.0	0.214
Lot 3 - Proposed	0.84	8.0	0.303
Lot 4 - Existing	0.43	8.0	0.141
Lot 4 - Proposed	0.56	8.0	0.200
Lot 5 - Existing	0.61	8.0	0.200
Lot 5 - Proposed	0.79	8.0	0.284
Lot 6 - Existing	1.78	8.0	0.587
Lot 6 - Proposed	2.32	8.0	0.832
Lot 7 - Existing	0.14	8.0	0.047
Lot 7 - Proposed	0.19	8.0	0.067
Road - Existing	0.62	8.0	0.205
Road - Proposed	0.81	8.0	0.290

25-yr, 24-hr	Peak Q cfs	Time to Peak hrs	Volume ac-ft
Lot 3 - Existing	0.98	8.0	0.322
Lot 3 - Proposed	1.16	8.0	0.417
Lot 4 - Existing	0.65	8.0	0.213
Lot 4 - Proposed	0.77	8.0	0.275
Lot 5 - Existing	0.92	8.0	0.301
Lot 5 - Proposed	1.09	8.0	0.390
Lot 6 - Existing	2.69	8.0	0.884
Lot 6 - Proposed	3.19	8.0	1.144
Lot 7 - Existing	0.22	8.0	0.071
Lot 7 - Proposed	0.26	8.0	0.092
Road - Existing	0.94	8.0	0.308
Road - Proposed	1.11	8.0	0.399

Calculated by: CC
Checked by: AQK

023-1209.000

50-yr, 24-hr	Peak Q cfs	Time to Peak hrs	Volume ac-ft
Lot 3 - Existing	1.09	8.0	0.358
Lot 3 - Proposed	1.27	8.0	0.454
Lot 4 - Existing	0.72	8.0	0.237
Lot 4 - Proposed	0.84	8.0	0.300
Lot 5 - Existing	1.02	8.0	0.336
Lot 5 - Proposed	1.19	8.0	0.426
Lot 6 - Existing	3.00	8.0	0.984
Lot 6 - Proposed	3.48	8.0	1.248
Lot 7 - Existing	0.24	8.0	0.079
Lot 7 - Proposed	0.28	8.0	0.100
Road - Existing	1.05	8.0	0.343
Road - Proposed	1.21	8.0	0.435

100-yr, 24-hr	Peak Q cfs	Time to Peak hrs	Volume ac-ft
Lot 3 - Existing	1.20	8.0	0.395
Lot 3 - Proposed	1.37	8.0	0.492
Lot 4 - Existing	0.80	8.0	0.261
Lot 4 - Proposed	0.91	8.0	0.325
Lot 5 - Existing	1.13	8.0	0.370
Lot 5 - Proposed	1.28	8.0	0.461
Lot 6 - Existing	3.31	8.0	1.085
Lot 6 - Proposed	3.77	8.0	1.352
Lot 7 - Existing	0.27	8.0	0.087
Lot 7 - Proposed	0.30	8.0	0.109
Road - Existing	1.15	8.0	0.378
Road - Proposed	1.31	8.0	0.471

Golder Associates Inc.

Basin Hydrology - Parking Lot 4

Site Description:

This lot is located south of Lot 5, just across the bridge to the northern parking areas at Alpental Ski Area. The lot is 0.51 acres in size, and is graveled and fairly flat.

Input to Hydrology Model:

Model Used: HEC-HMS

See Time of Concentration sheet for additional calculations

Basin Model Parameters

SCS Curve Number Method used

	EXISTING	*PROPOSED*	
Lot Area (ac)	0.60	0.60	
CN	89	98	
Initial Loss (in.)	0.25	0.04	*Initial Loss = 0.2((1000/CN)-10)*
% Impervious	0.0%	100.0%	
SCS Lag (0.6*Tc)	2.2	2.2	*See Time of Concentration Calcs - Same Tc for both cases*

Meteorological Model Parameters:

Model Used: SCS Hypothetical Storm

Storm Type: Type Ia Storm

Storm Events

Event	*Precip (in.)*
2-yr, 24-hr	3.5
10-yr, 24-hr	4.0
25-yr, 24-hr	5.5
50-yr, 24-hr	6.0
100-yr, 24-hr	6.5

Golder Associates Inc.

Time of Concentration Calculation - Lot 4

The sum of the travel times for sheet flow, shallow concentrated flow and channel flow.

Sheet Flow

T_{sheet} (minutes) =[$0.42(n_s L)^{0.8}$]/[$(P_2)^{0.527}$*$S^{0.4}$]

Where:

ns =	*Sheet flow Manning's n*
L =	*flow length (ft) up to 300 feet*
P2 =	*2-year, 24-hour rainfall (in.)*
S =	*Slope of hydraulic grade line (land slope), ft/ft*

Site Data:

ns =	0.011	Smooth surfaces (asphalt, gravel, packed soil)
L =	300	feet
P_2 =	3.5	From W. WA Precipitation Maps and King County Surface Design Manual
S =	0.01	sheet flow slope, ft/ft
T_{sheet} =	**3.56**	**minutes**

Shallow Concentrated Flow:

After a maximum of 300 feet, sheet flow assumes to become shallow concentrated flow.

$T_{shallow}$ = Length of sheet flow/V

$V = k(s)^{0.5}$

Where:

V =	*Velocity (ft/s)*
k =	*time of concentration velocity factor (ft/s)*
s =	*slope of flow path (ft/ft)*

Site Data:

k =	27	Paved and gravel areas
s =	0.01	ft/ft
V =	2.70	ft/s
Length of flow path =	25	ft
Time of flow =	**0.15**	**minutes**

Open Channel Flow

Same equation as above, with different k value

Where

k =	10	Vegetated waterway
s =	0.020	ft/ft
V =	1.41	ft/s
L =	0.00	ft
Time of flow =	**0.00**	**minutes**

Time of Concentration for Basin:

T_{sheet}	3.56	minutes

$T_{shallow}$	0.15 minutes
$T_{channel}$	0.00 minutes
TOTAL Tc	**4 minutes**

Golder Associates Inc.

Basin Hydrology - Parking Lot 5

Site Description:

This lot is located just south of Lot 6 at the northern end of the parking areas at the Alpental Ski Area. The lot is 0.85 acres in size, fairly flat with a gravel surface.

Input to Hydrology Model:

Model Used: HEC-HMS

See Time of Concentration sheet for additional calculations

Basin Model Parameters

SCS Curve Number Method used

	EXISTING	*PROPOSED*	
Lot Area (ac)	0.85	0.85	
CN	89	98	
Initial Loss (in.)	0.25	0.04	*Initial Loss = 0.2((1000/CN)-10)*
% Impervious	0.0%	100.0%	
SCS Lag (0.6*Tc)	2.1	2.1	*See Time of Concentration Calcs - Same Tc for both cases*

Meteorological Model Parameters:

Model Used: SCS Hypothetical Storm

Storm Type: Type Ia Storm

Storm Events

Event	*Precip (in.)*
2-yr, 24-hr	3.5
10-yr, 24-hr	4.0
25-yr, 24-hr	5.5
50-yr, 24-hr	6.0
100-yr, 24-hr	6.5

Golder Associates Inc.

Time of Concentration Calculation - Lot 5

The sum of the travel times for sheet flow, shallow concentrated flow and channel flow.

Sheet Flow

T_{sheet} (minutes) =[$0.42(n_s L)^{0.8}$]/[$(P_2)^{0.527}*S^{0.4}$]

Where:

ns =	*Sheet flow Manning's n*
L =	*flow length (ft) up to 300 feet*
P2 =	*2-year, 24-hour rainfall (in.)*
S =	*Slope of hydraulic grade line (land slope), ft/ft*

Site Data:

ns =	0.011	Smooth surfaces (asphalt, gravel, packed soil)
L =	300	feet
P_2 =	3.5	From W. WA Precipitation Maps and King County Surface Design Manual
S =	0.01	sheet flow slope, ft/ft
T_{sheet} =	**3.56**	**minutes**

Shallow Concentrated Flow:

After a maximum of 300 feet, sheet flow assumes to become shallow concentrated flow.

$T_{shallow}$ = Length of sheet flow/V

$V = k(s)^{0.5}$

Where:

V =	*Velocity (ft/s)*
k =	*time of concentration velocity factor (ft/s)*
s =	*slope of flow path (ft/ft)*

Site Data:

k =	27	Paved and gravel areas
s =	0.01	ft/ft
V =	2.70	ft/s
Length of flow path =	0	ft
Time of flow =	**0.00**	**minutes**

Shallow Concentrated Flow:

After a maximum of 300 feet, sheet flow assumes to become shallow concentrated flow.

$T_{shallow}$ = Length of sheet flow/V

$V = k(s)^{0.5}$

Where:

V =	*Velocity (ft/s)*
k =	*time of concentration velocity factor (ft/s)*
s =	*slope of flow path (ft/ft)*

Site Data:

k =	27	Paved and gravel areas
s =	0.01	ft/ft
V =	2.70	ft/s

Calculated by: CC
Checked by: AQK

023-1209.000

Length of flow path = 0 ft
Time of flow = 0.00 minutes

Time of Concentration for Basin:

T_{sheet}	3.56 minutes
$T_{shallow}$	0.00 minutes
$T_{shallow}$	0.00 minutes
TOTAL Tc	**4 minutes**

Golder Associates Inc.

Basin Hydrology - Parking Lot 6

Site Description:

The site is a gravel parking lot, located at the northern end of the parking areas at the Alpental Ski Area. The lot is 2.50 acres in size and is fairly flat and clear of vegetation.

Input to Hydrology Model:

Model Used: HEC-HMS

See Time of Concentration sheet for additional calculations

Basin Model Parameters:

SCS Curve Number Method used

	EXISTING	*PROPOSED*	
Lot Area (ac)	2.50	2.50	
CN	89	98	
Initial Loss (in.)	0.25	0.04	*Initial Loss = 0.2((1000/CN)-10)*
% Impervious	0.0%	100.0%	
SCS Lag (0.6*Tc)	4.4	4.9	*See Time of Concentration Calcs*

Meteorological Model Parameters:

Model Used: SCS Hypothetical Storm

Storm Type: Type Ia Storm

Storm Events

Event	*Precip (in.)*
2-yr, 24-hr	3.5
10-yr, 24-hr	4.0
25-yr, 24-hr	5.5
50-yr, 24-hr	6.0
100-yr, 24-hr	6.5

Calculated by: CC
Checked by: AQK

023-1209.000

Golder Associates Inc.

Time of Concentration Calculation - Lot 6

The sum of the travel times for sheet flow, shallow concentrated flow and channel flow.

Sheet Flow

T_{sheet} (minutes) =[$0.42(n_s L)^{0.8}$]/[$(P_2)^{0.527} * S^{0.4}$]

Where:

ns =	*Sheet flow Manning's n*
L =	*flow length (ft) up to 300 feet*
P2 =	*2-year, 24-hour rainfall (in.)*
S =	*Slope of hydraulic grade line (land slope), ft/ft*

Site Data:

ns =	0.011	Smooth surfaces (asphalt, gravel, packed soil)
L =	300	feet
P_2 =	3.5	From W. WA Precipitation Maps and King County Surface Design Manual
S =	0.01	sheet flow slope, ft/ft
T_{sheet} =	**3.56**	**minutes**

Shallow Concentrated Flow:

After a maximum of 300 feet, sheet flow assumes to become shallow concentrated flow.

$T_{shallow}$ = Length of sheet flow/V

$V = k(s)^{0.5}$

Where:

V =	*Velocity (ft/s)*
k =	*time of concentration velocity factor (ft/s)*
s =	*slope of flow path (ft/ft)*

Site Data:

k =	27	Paved and gravel areas
s =	0.01	ft/ft
V =	2.70	ft/s
Length of flow path =	600	ft
Time of flow =	**3.70**	**minutes**

Open Channel Flow

Same equation as above, with different k value

Where

k =	15	Rock-lined waterway
s =	0.010	ft/ft
V =	1.50	ft/s
L =	0.00	ft
Time of flow =	**0.00**	**minutes**

Time of Concentration for Basin:

T_{sheet} 3.56 minutes

Calculated by: CC
Checked by: AQK

023-1209.000

$T_{shallow}$	3.70 minutes
$T_{channel}$	0.00 minutes
TOTAL Tc	**7 minutes**

Golder Associates Inc.

Basin Hydrology - Parking Lot 7

Site Description:

The site is a gravel parking lot, located at the northern end of the parking areas at the Alpental Ski Area.
The lot is 0.20 acres in size and is fairly flat and clear of vegetation.

Input to Hydrology Model:

Model Used: HEC-HMS

See Time of Concentration sheet for additional calculations

Basin Model Parameters:

SCS Curve Number Method used

	EXISTING	*PROPOSED*	
Lot Area (ac)	0.20	0.20	
CN	89	98	
Initial Loss (in.)	0.25	0.04	*Initial Loss = 0.2((1000/CN)-10)*
% Impervious	0.0%	100.0%	
SCS Lag (0.6*Tc)	1.7	1.7	*See Time of Concentration Calcs - Same Tc for both cases*

Meteorological Model Parameters:

Model Used: SCS Hypothetical Storm
Storm Type: Type Ia Storm

Storm Events

Event	*Precip (in.)*
2-yr, 24-hr	3.5
10-yr, 24-hr	4.0
25-yr, 24-hr	5.5
50-yr, 24-hr	6.0
100-yr, 24-hr	6.5

Golder Associates Inc.

Time of Concentration Calculation - Lot 7

The sum of the travel times for sheet flow, shallow concentrated flow and channel flow.

Sheet Flow

T_{sheet} (minutes) =[$0.42(n_s L)^{0.8}$]/[$(P_2)^{0.527}*S^{0.4}$]

Where:

ns =	*Sheet flow Manning's n*
L =	*flow length (ft) up to 300 feet*
P2 =	*2-year, 24-hour rainfall (in.)*
S =	*Slope of hydraulic grade line (land slope), ft/ft*

Site Data:

ns =	0.011	Smooth surfaces (asphalt, gravel, packed soil)
L =	220	feet
P_2 =	3.5	From W. WA Precipitation Maps and King County Surface Design Manual
S =	0.01	sheet flow slope, ft/ft
T_{sheet} =	**2.78**	**minutes**

Shallow Concentrated Flow:

After a maximum of 300 feet, sheet flow assumes to become shallow concentrated flow.

$T_{shallow}$ = Length of sheet flow/V

$V = k(s)^{0.5}$

Where:

V =	*Velocity (ft/s)*
k =	*time of concentration velocity factor (ft/s)*
s =	*slope of flow path (ft/ft)*

Site Data:

k =	27	Paved and gravel areas
s =	0.01	ft/ft
V =	2.70	ft/s
Length of flow path =	0	ft
Time of flow =	**0.00**	**minutes**

Open Channel Flow

Same equation as above, with different k value

Where

k =	15	Rock-lined waterway
s =	0.010	ft/ft
V =	1.50	ft/s
L =	0.00	ft
Time of flow =	**0.00**	**minutes**

Time of Concentration for Basin:

T_{sheet}	2.78	minutes

$T_{shallow}$	0.00 minutes
$T_{channel}$	0.00 minutes
TOTAL Tc	**3 minutes**

Calculated by: CC
Checked by: AQK

023-1209.000

Golder Associates Inc.

Basin Hydrology - ROAD

Site Description:

This site consists of the gravel road, leading from Lot 6 to the southeast to the bridge.
The road is at a constant grade, and is 40 feet wide and approx. 950 feet long.

Input to Hydrology Model:

Model Used: HEC-HMS

See Time of Concentration sheet for additional calculations

Basin Model Parameters

SCS Curve Number Method used

	EXISTING	*PROPOSED*	
Lot Area (ac)	0.87	0.87	
CN	89	98	
Initial Loss (in.)	0.25	0.04	*Initial Loss = 0.2((1000/CN)-10)*
% Impervious	0.0%	100.0%	
SCS Lag (0.6*Tc)	2.8	2.8	*See Time of Concentration Calcs - Same Tc for both cases*

Meteorological Model Parameters:

Model Used: SCS Hypothetical Storm
Storm Type: Type Ia Storm

Storm Events

Event	*Precip (in.)*
2-yr, 24-hr	3.5
10-yr, 24-hr	4.0
25-yr, 24-hr	5.5
50-yr, 24-hr	6.0
100-yr, 24-hr	6.5

Calculated by: CC
Checked by: AQK

023-1209.000

Golder Associates Inc.

Time of Concentration Calculation - Road

The sum of the travel times for sheet flow, shallow concentrated flow and channel flow.

Sheet Flow

T_{sheet} (minutes) =[$0.42(n_s L)^{0.8}$]/[$(P_2)^{0.527} * S^{0.4}$]

Where:

ns =	*Sheet flow Manning's n*
L =	*flow length (ft) up to 300 feet*
P2 =	*2-year, 24-hour rainfall (in.)*
S =	*Slope of hydraulic grade line (land slope), ft/ft*

Site Data:

ns =	0.011	Smooth surfaces (asphalt, gravel, packed soil)
L =	300	feet
P_2 =	3.5	From W. WA Precipitation Maps and King County Surface Design Manual
S =	0.03	sheet flow slope, ft/ft
T_{sheet} =	**2.29**	**minutes**

Shallow Concentrated Flow:

After a maximum of 300 feet, sheet flow assumes to become shallow concentrated flow.

$T_{shallow}$ = Length of sheet flow/V

$V = k(s)^{0.5}$

Where:

V =	*Velocity (ft/s)*
k =	*time of concentration velocity factor (ft/s)*
s =	*slope of flow path (ft/ft)*

Site Data:

k =	27	Paved and gravel areas
s =	0.03	ft/ft
V =	4.68	ft/s
Length of flow path =	650	ft
Time of flow =	**2.32**	**minutes**

Open Channel Flow

Same equation as above, with different k value

Where

k =	10	Vegetated waterway
s =	0.020	ft/ft
V =	1.41	ft/s
L =	0.00	ft
Time of flow =	**0.00**	**minutes**

Time of Concentration for Basin:

T_{sheet}	2.29	minutes

Calculated by: CC
Checked by: AQK

023-1209.000

$T_{shallow}$	2.32 minutes
$T_{channel}$	0.00 minutes
TOTAL Tc	**5 minutes**

Golder Associates Inc.

Size preliminary vault detention facilities to detain developed flows from the proposed parking area improvements.

Only those lots which will be increased in area require quantity control (detention) in the form of a vault. ***Per US Forest Service***

Vaults will be sized based on the following requirements:

* *Detain flows such that the allowed discharge during the 2-year, 24-hour event after development is equal to or less than 1/2 of the pre-developed (existing) 2-yr, 24-hour event*
* *Detain flows such that the allowed discharge during the 100-year, 24-hour event after development is equal to or less than the pre-developed 100-yr, 24-hour event*

Snoqualmie Lot (that require detention)

Existing (pre-developed) Peak Flow Rates:

Lot	**2-yr, 24-hr**	**1/2 of 2 yr**	**100-yr, 24-hr**
SW 1 - UPPER	2.06	1.03	4.64

Alpental Lot

Existing (pre-developed) Peak Flow Rates:

Lot	**2-yr, 24-hr**	**1/2 of 2yr**	**100-yr, 24-hr**
Lot 6	1.14	0.57	2.56

The vault size will be developed in HEC-HMS. A stage-storage relationship is entered based on assumed size of the vault. An orifice to pass 1/2 the 2-yr event is assumed, and a broad-crested weir assumed to pass the 100-yr event.

The developed flows are then routed through the vault, and the size of vault (stage-storage relationship) and/or the orifice is adjusted to ensure the flows are retained and released at the required rates.

Each vault size will be tested by routing the peak flows from the various parking lots thorugh the vault to ensure Qout is less than or equal to Qallowed.

Calculated by: CC
Checked by: AQK

023-1209.000

Golder Associates Inc.

This sheet provides calculations to determine areas and storage volumes of vaults for input into the model. The stage-storage relationship for each pond or vault is not shown here, but the example calculation is.

Vault Stage-Storage Relationship:
Design a vault to the criteria for the lots that require quantity control.

Example Calculation for Input to HMS:

Width of Vault =	20	ft
Length of Vault =	70	ft
Area at each foot =	1400	sq. ft.

H (ft)	S (cu. ft)	S (ac-ft)
1	1400	0.0321
2	2800	0.0643
3	4200	0.0964
4	5600	0.1286
5	7000	0.1607
6	8400	0.1928
6.5	9100	0.2089

Note: A dead volume consideration for sediment storage is considered in the model (initial elevation setting).

Snoqualmie Lot Vault Size Results:
After numerous iterations between storage volume and outlet characteristics in HEC-HMS (reservoir routing), a vault size is determined that meets the outflow requirements.

Parameter	SW 1	A6
Width (ft)	20	20
Length (ft)	410	70
Surface Area (sq. ft.)	8200	1400
Vol. at 6 feet (ac-ft)	1.13	0.193
Elev. Of Orifice	0.5	0.5
Area of Orifice (sq. ft.)	0.125	0.07
Elev. Of Spillway	4	4
Length of Spillway (ft)	1.9	1.9
2-year Q out (cfs)	1.027	0.57
2-yr WS elev (ft)	3.41	3.41
100-yr Q out (cfs	4.3	2.53
100-yr WS elev (ft)	5.44	5.04

Golder Associates Inc.

Bioswale Design

Bioswales for treatment of stormwater are to be designed for two parking lot areas: SF1 (Silver Fir) and SW2 (Maintenance Lot).

Design and criteria based on King County Surface Water Design Manual, 1998.

Bioswale Design Criteria

Bioswales designed to treat 80% of TSS for the water quality design storm, which is defined as 60% of the 2-year, 24-hour event.

Swales are designed to treat the WQ storm, and checked to ensure conveyance of the 100-year event and associated criteria.

WQ Storm Design Criteria

Max. flow depth	0.33	feet (based on no-mowing)
Max. flow velocity	1	fps
Min. bottom width	2	feet
Manning's 'n'	0.2	(low flow conditions)
Channel slope	.01 - .06	ft/ft
Channel x-sec shape	trapezoidal	
Side slopes	2:1 max	H:V
Min. swale length	100	feet

Once the swale is designed per WQ flow, the swale must be checked against the 100-year storm conveyance criteria:

100-year Storm Conveyance Criteria

Manning's 'n'	0.03	
Max. flow velocity	5	fps

Design Flows

	SF 1	SW 2 (Maint.)	
WQ Storm	0.84	0.36	cfs
100-year Conveyance	2.60	1.12	cfs

Golder Associates Inc.

Bioswale Length

Design and criteria based on King County Surface Water Design Manual, 1998.

The length of the bioswale is dependant upon the design flow velocity.
The minimum swale length is 100 feet.

The equation for determining length is based upon a hydraulic residence time of at least 9 minutes. The equation is:

$L = 540V_{WQ}$
Where V = WQ design flow velocity (fps)

Lot	Velocity (fps)	Length (feet)
SF 1	0.33	178.2
SW 2 (Maint.)	0.31	167.4

Golder Associates Inc.

Oil Water Seperators

Design and criteria based on King County Surface Water Design Manual, 1998.

OWS Design Criteria

Oil Water Seperators are designed to treat the WQ storm event,
defined as 60% of the 2-year, 24-hour event.

OWS Design Flow

Lot	2-yr, 24-hr Q	WQ Flow, cfs	WQ Flow, gpm
SF 1	1.40	0.84	376.69
SW 2 (South)	1.44	0.86	386.98
SW 2 (North)	1.45	0.87	391.80
SW 2 (Maint.)	0.60	0.36	162.44
SW 1 Upper	5.12	3.07	1377.92
SW 1 Lower	1.38	0.83	372.49

APPENDIX B

TYPICAL SECTIONS/SCHEMATICS FOR STORMWATER STRUCTURES

TYP Catch Basin
TYP Manhole
TYP Vault (Panel and 3-Sided box Systems)
TYP Oil Water Separator (OWS)
TYP Piping materials

NOW AVAILABLE

CATCH BASINS and RISERS

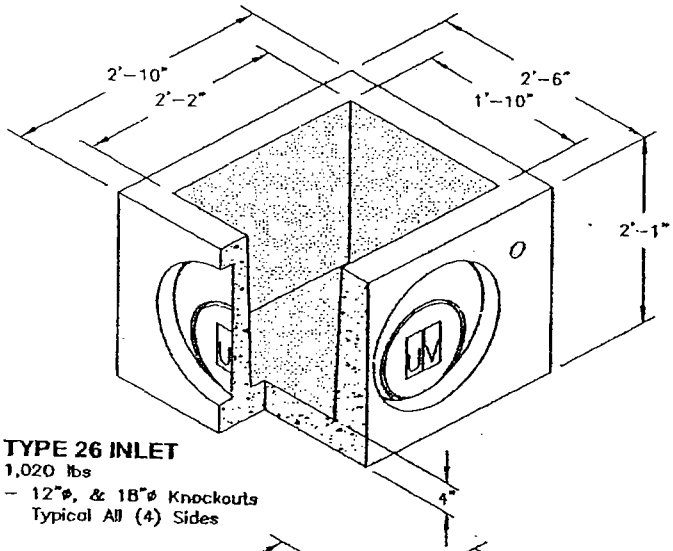

TYPE 26 INLET
1,020 lbs
- 12"ø, & 18"ø Knockouts Typical All (4) Sides

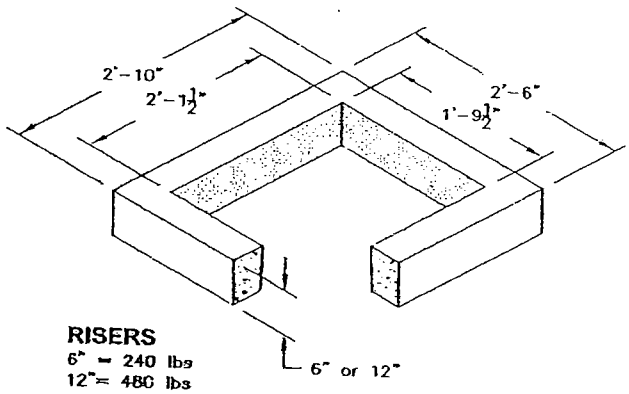

RISERS
6" = 240 lbs
12"= 480 lbs

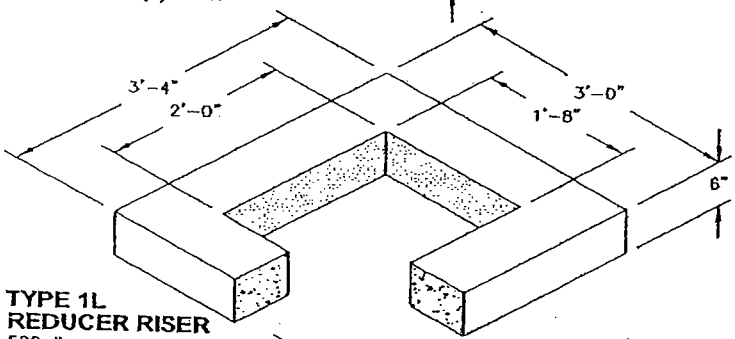

TYPE 1L REDUCER RISER
500 lbs

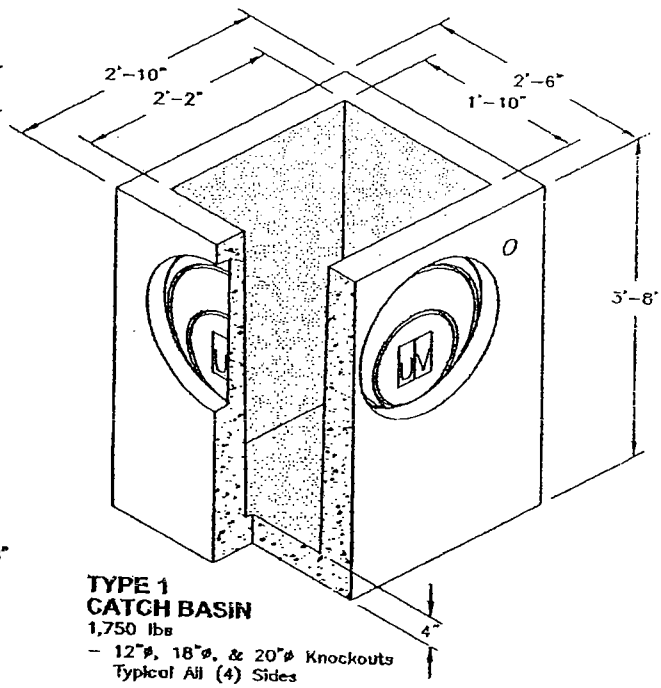

TYPE 1 CATCH BASIN
1,750 lbs
- 12"ø, 18"ø, & 20"ø Knockouts Typical All (4) Sides

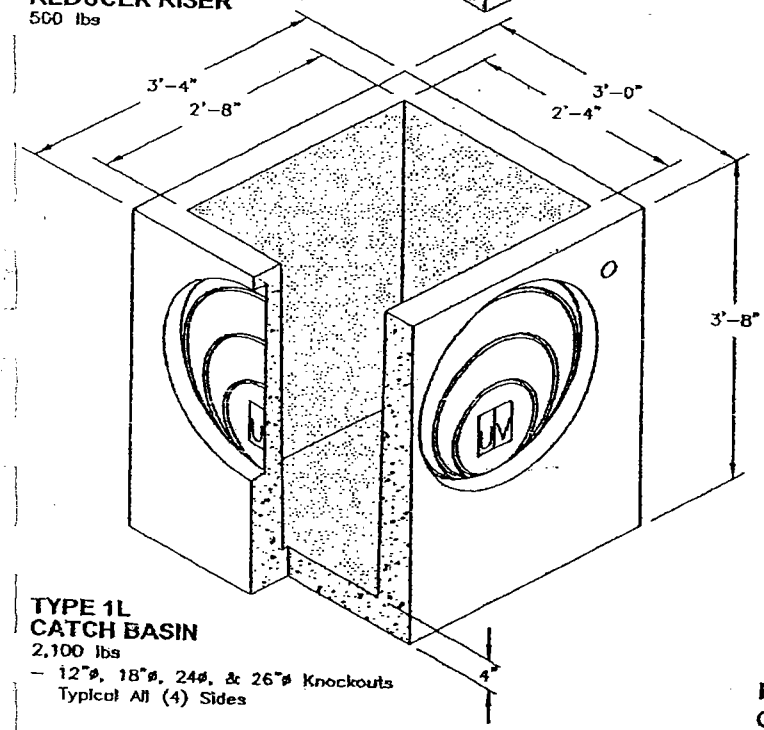

TYPE 1L CATCH BASIN
2,100 lbs
- 12"ø, 18"ø, 24ø, & 26"ø Knockouts Typical All (4) Sides

UTILITY VAULT CATCH BASINS:
- H-20 Loading
- Meet ASTM C478 (AASHTO M 199) & CB90
- Meet All WSDOT/APWA Standard Specifications
- 6" & 12" Risers Available
- Frame & Grate Available

For Information And Pricing Contact Deanne Erickson
Office: 1-800-892-1538 **Mobile: 253-569-3408**

® UTILITY VAULT™
a division of Oldcastle Precast, Inc.
P.O. BOX 588, Auburn, Washington 98071-0588
Phone: 253-839-3500 Fax: 253-735-4201
Website: www.oldcastleprecast.com/auburnwa

Copyright © 2003 Oldcastle Precast, Inc.

NOW AVAILABLE

TYPE 2 CATCH BASIN

FRAME AND GRATE
240 lbs.

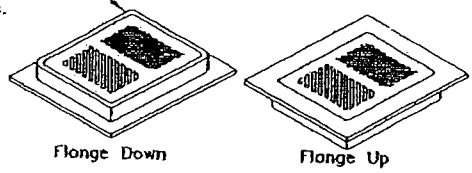

TYPE 1 CATCH BASIN RISER
6" = 240 lbs.
12" = 480 lbs.

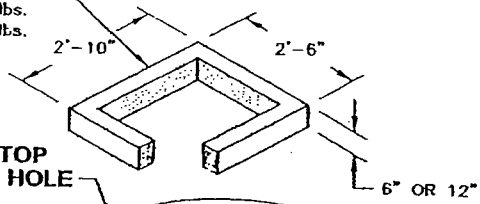

48" FLAT TOP w/24"x20" HOLE
1,835 lbs.

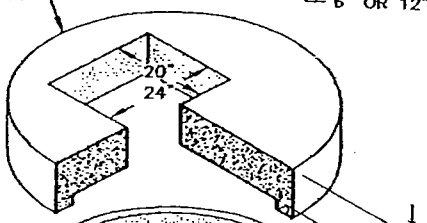

RISER

Height	WT.
1'	870 lbs.
2'	1,740 lbs.
3'	2,610 lbs.
4'	3,480 lbs.
5'	4,350 lbs.

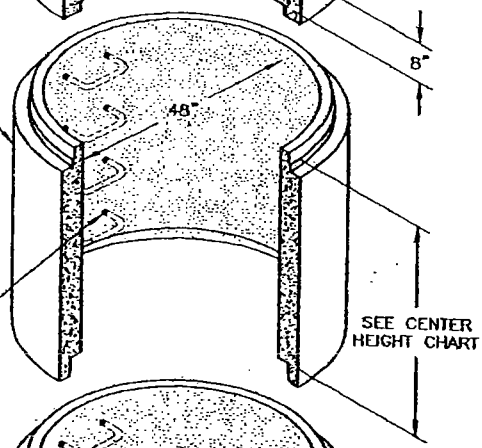

BASE

Height	WT.
2'	3,605 lbs.
3'	4,225 lbs.
4'	4,845 lbs.
5'	5,465 lbs.

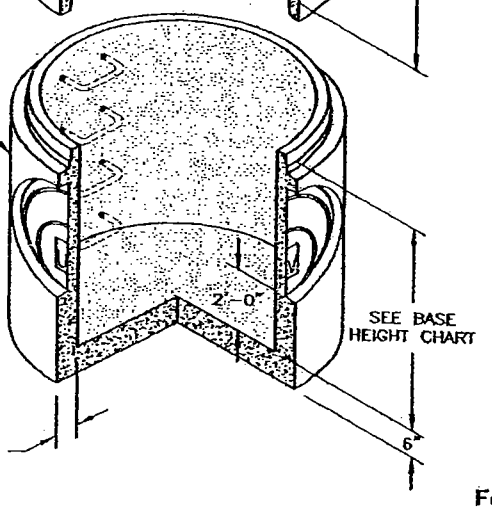

Optional Cover Assembly

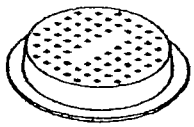

Frame and Cover
360 lbs.

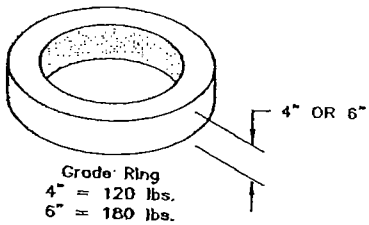

Grade Ring
4" = 120 lbs.
6" = 180 lbs.

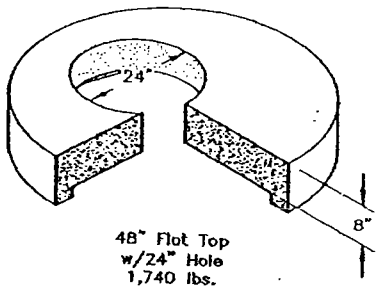

48" Flat Top
w/24" Hole
1,740 lbs.

48" SHOWN - Also Available in
54", 60", 72", 84", 96", 120", & 144"

UTILITY VAULT MANHOLES:
- H-20 Loading
- Manhole meets ASTM C478 and All WSDOT/APWA Standard Specifications
- Rubber Gasket Joint meets ASTM C443
- Knockout Sizes and Locations Available to Meet Job Requirements

For Information And Pricing Contact Deanne Erickson
Office: 1-800-892-1538 **Mobile: 253-569-3408**

® UTILITY VAULT™
a division of Oldcastle Precast, Inc.
P.O. BOX 588, Auburn, Washington 98071-0588
Phone: 253-839-3500 Fax: 253-735-4201
Website: www.oldcastleprecast.com/auburnwa

Copyright © 2003 Oldcastle Precast, Inc.

NOW AVAILABLE

48" TYPE 1 MANHOLE

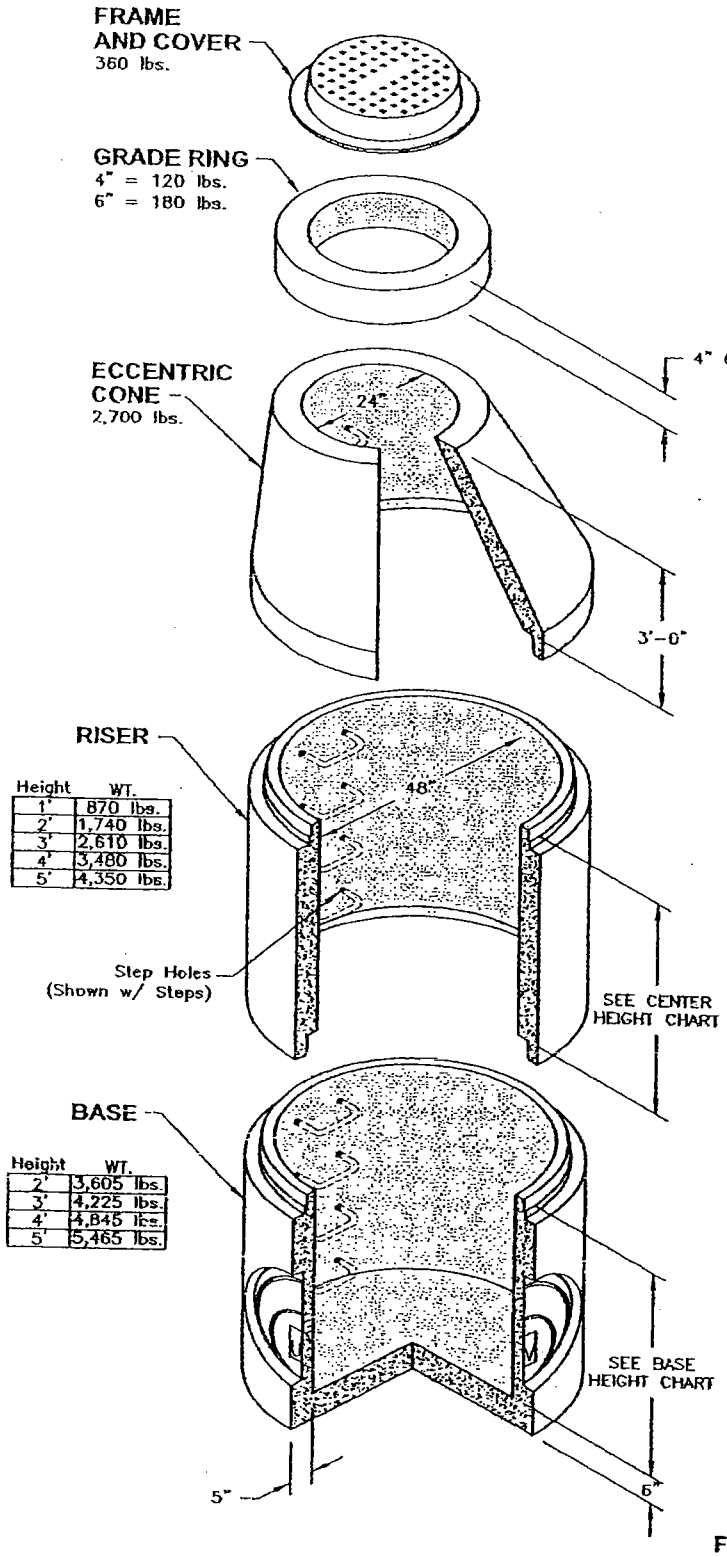

Height	WT.
1'	870 lbs.
2'	1,740 lbs.
3'	2,610 lbs.
4'	3,480 lbs.
5'	4,350 lbs.

Height	WT.
2'	3,605 lbs.
3'	4,225 lbs.
4'	4,845 lbs.
5'	5,465 lbs.

Optional Tops

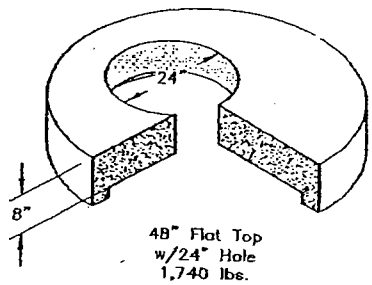

48" Flat Top
w/24" Hole
1,740 lbs.

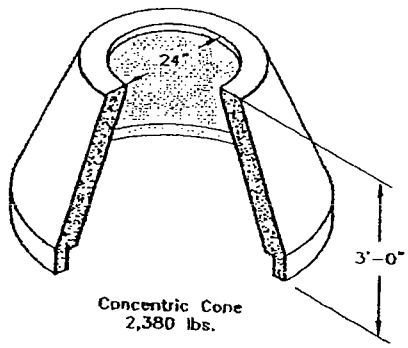

Concentric Cone
2,380 lbs.

UTILITY VAULT MANHOLES:

- H-20 Loading
- Manhole meets ASTM C478 and All WSDOT/APWA Standard Specifications
- Rubber Gasket Joint meets ASTM C443
- Knockout Sizes and Locations Available to Meet Job Requirements

For Information And Pricing Contact Deanne Erickson
Office: 1-800-892-1538 Mobile: 253-569-3408

® UTILITY VAULT™
a division of Oldcastle Precast, Inc.
P.O. BOX 588, Auburn, Washington 98071-0588
Phone: 253-839-3500 Fax: 253-735-4201
Website: www.oldcastleprecast.com/auburnwa

Copyright © 2003 Oldcastle Precast, Inc.

PANEL VAULT

Top Section
Can Be One Piece or
Multiple Sections

Lift Anchors
Typical

See Connection Detail
Below

Access Size & Location
As Required

Galvanized "C Channels
As Required

Edge Lift Anchors
Typical In Walls

Gasket

UV Co. Term-A-Ducts
As Required

Gasket

Blockouts
As Required

Slotted Blockout
Size(s) and Location(s)
As Required

Gasket

Gasket

Recessed Galvanized Pulling Iron
As Required

Base Section
Can Be One Piece or
Multiple Sections

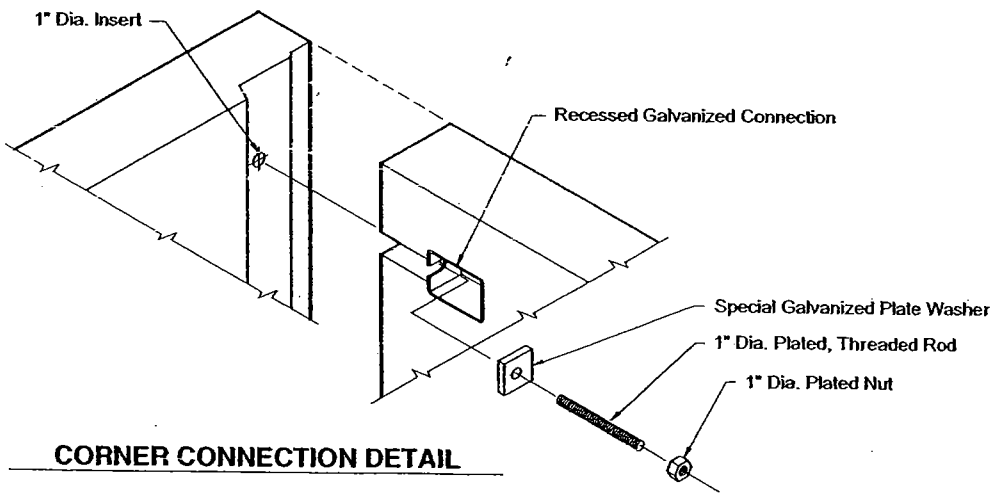

CORNER CONNECTION DETAIL

ABOUT PANEL VAULTS:

- PANEL VAULTS ARE **CUSTOM** DESIGNED TO ANY SIZE AND CONFIGURATION FOR JOB REQUIREMENTS. ACCESS, BLOCKOUTS, AND EMBEDS AS REQUIRED.
- CONTRACTOR IS RESPONSIBLE FOR SUPPLYING CRANE FOR OFF-LOADING AND ASSEMBLY OF VAULT SECTIONS
- CONTACT UTILITY VAULT COMPANY REPRESENTATIVE FOR DETAILS

*** ITEMS SHOWN ARE SUBJECT TO CHANGE WITHOUT NOTICE.**

UV®

UTILITY VAULT COMPANY

P.O. BOX 588
Auburn, Washington 98071-0588

Phone (253) 839-3500
Fax (253) 735-4201

Copyright © 1992 Oldcastle Precast, Inc., All Rights Reserved

DETENTION VAULTS
3-SIDED BOX SYSTEM

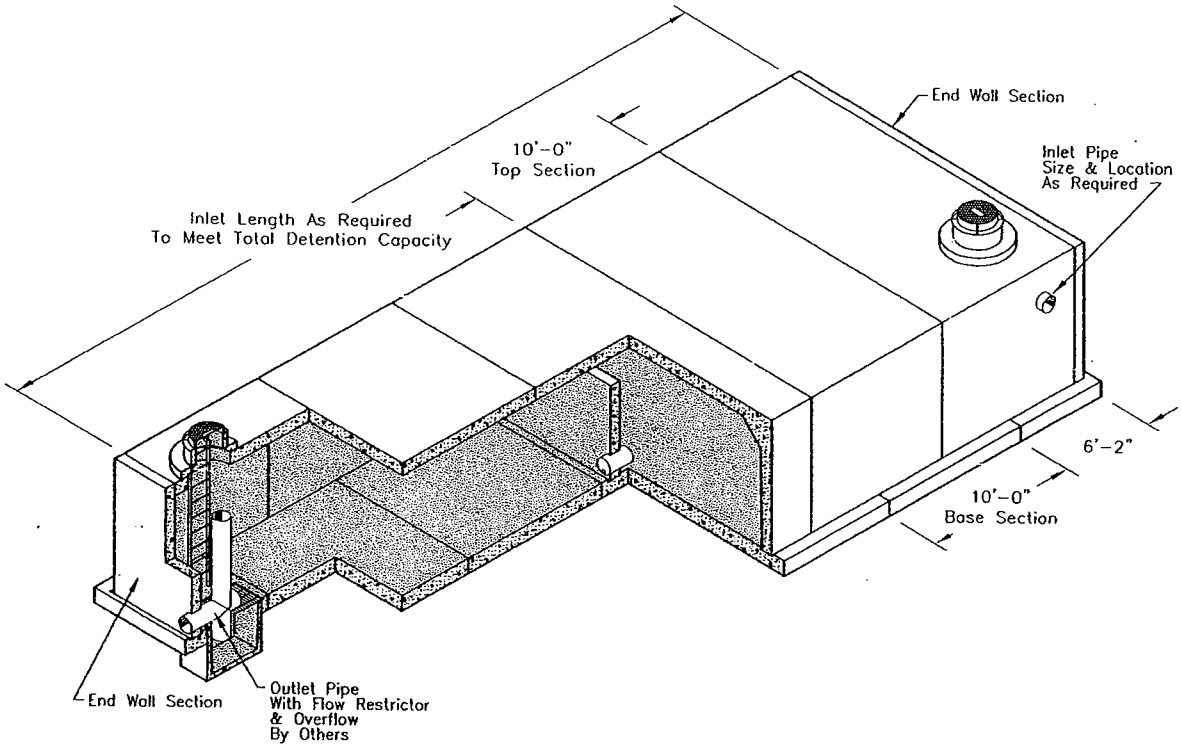

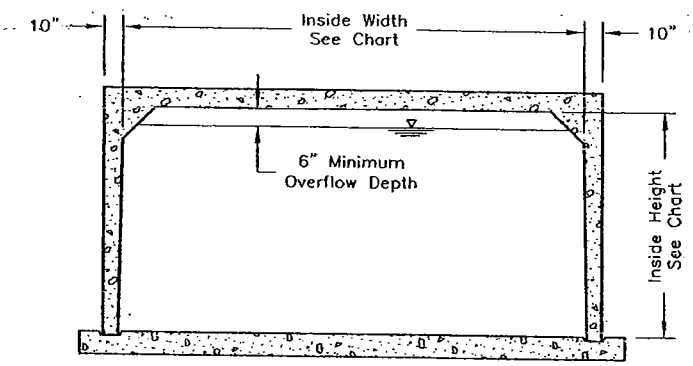

SECTION VIEW

INSIDE WIDTH	INSIDE HEIGHT 3'-0"	4'-0"	5'-0"	6'-0"	7'-0"	8'-0"
10'-0"	187	262	337	411	486	561
12'-0"	218	309	400	491	582	673
13'-0"	237	335	433	532	631	729
14'-0"	256	361	467	573	679	785
15'-0"	275	387	501	614	728	842
16'-0"	293	414	534	655	776	898
17'-0"	312	440	568	696	825	954
18'-0"	331	466	601	737	873	1,010
19'-0"	349	492	635	778	922	1,066
20'-0"	368	518	669	820	971	1,122

DETENTION TANK SIZING CHART
Gallons Per Linear Foot

NOTES:

Utility Vault Company Detention Vaults Meet Requirements For King County Detention Vaults, (King County Surface Water Design Manual, Section 4.4.6)

Each Detention Vault Is Custom Designed And Produced To Meet Project And Jobsite Requirements

® UTILITY VAULT™
a division of Oldcastle Precast, Inc.
P.O. BOX 588, Auburn, Washington 98071-0588
Phone: 253-839-3500 Fax: 253-735-4201
Website: www.oldcastleprecast.com/auburnwa

For Details See Reverse Side

Copyright © 1992 Oldcastle Precast, Inc.

5106-CPS
OIL WATER SEPARATOR

Projected Plate Area = 740 Sq/ft
Maximum Process Flow = 690 GPM

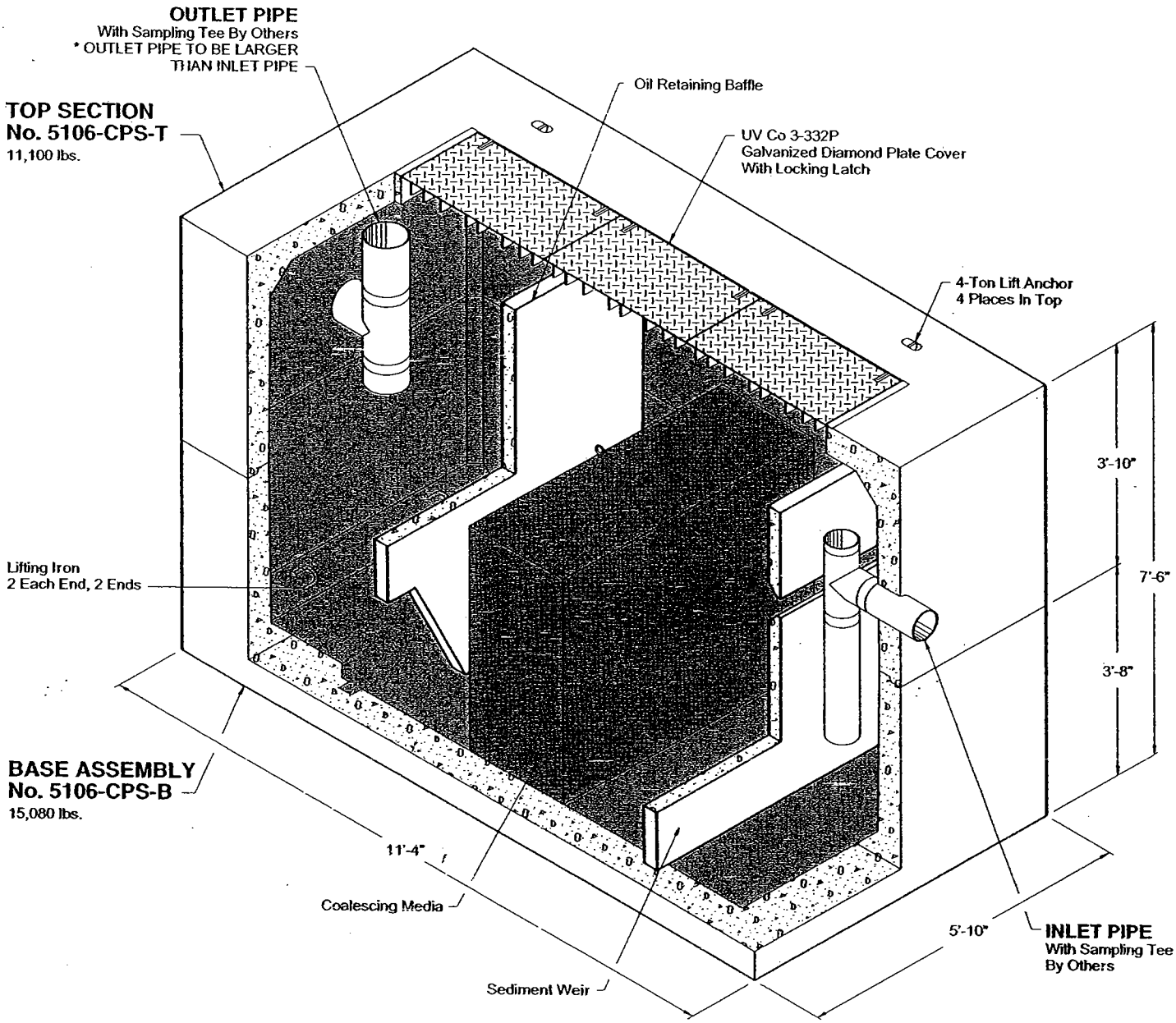

®
UTILITY VAULT COMPANY
P.O. BOX 588
Auburn, Washington 98071-0588
Phone (253) 839-3500
Fax (253) 735-4201

For Details Of Access Covers, See COVER Section.

*** ITEMS SHOWN ARE SUBJECT TO CHANGE WITHOUT NOTICE.**

FOR DETAILS SEE REVERSE SIDE.

Copyright © 1985 Oldcastle Precast, Inc., All Rights Reserved

Issue: January, 1996

5106-CPS
OIL WATER SEPARATOR

Projected Plate Area = 740 Sq/ft
Maximum Process Flow = 690 GPM

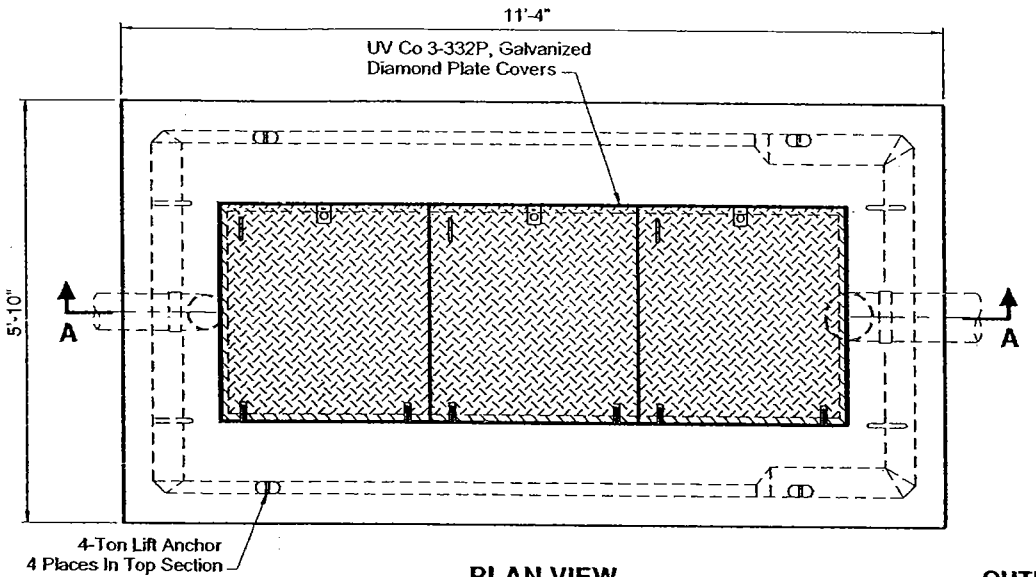

PLAN VIEW

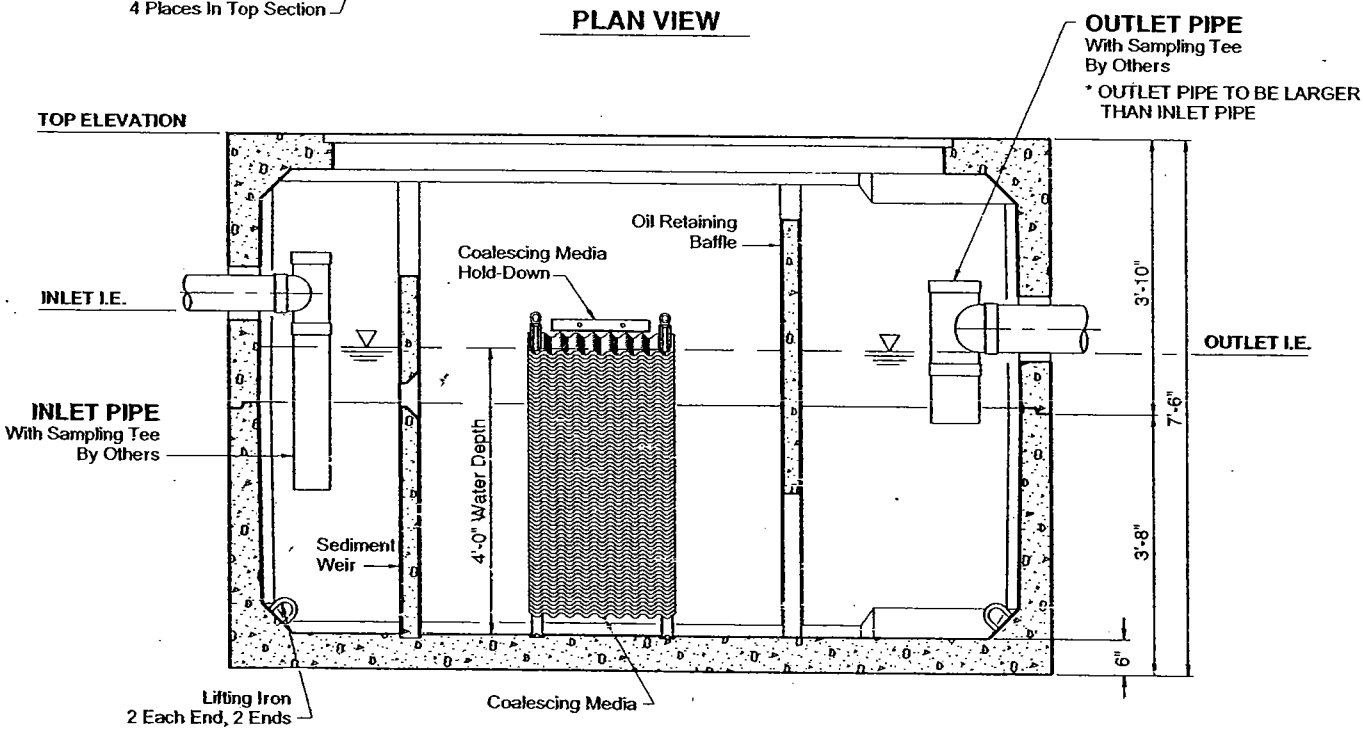

SECTION AA

STRUCTURAL NOTES:

1. Concrete: 28 Day Compressive Strength f'c = 4500 psi
2. Rebar: ASTM A-615 Grade 60
3. Mesh: ASTM A-185 Grade 65
4. Design: ACI-318-89 Building Code
   ASTM C-857 "Minimum Structural Design Loading For Underground Precast Concrete Utility Structures"
5. Loads: H-20 Truck Wheel w/ 30% Impact Per AASHTO

GENERAL NOTES:

1. All Baffles and Weirs To Be Precast Concrete
2. Static Water Depth = 4'-0"
3. Contractor To:
   Supply and Install All Piping & Sampling Tees
   Grout In All Pipes
   Fill w/ CLean Water Prior To "Start-Up" Of System
   Verify All Blockout Sizes and Locations

INFORMATION NEEDED:

- Top Of Separator Elevation _____
- Inlet Pipe Size _____
- Inlet Pipe Elevation _____
- Outlet Pipe Size _____
- Outlet Pipe Elevation _____

BASIC DESIGN INFORMATION:

INFLUENT CHARACTERISTICS -
Oil Specific Gravity = 0.88
Operating Temperature = 50°
Influent Oil Concentration = 100 ppm
Mean Oil Droplet Size = 130 micron
0.033 ft/min Oil Rise Rate
Designed Per Washington State Department Of Ecology

FLOW RATE	EFFLUENT QUALITY	100% COLLECTED SIZE
183 GPM	10 ppm	60 Micron

816-2-CPS
OIL WATER SEPARATOR

Projected Plate Area = 2,368 Sq/ft
Maximum Process Flow = 1,100 GPM

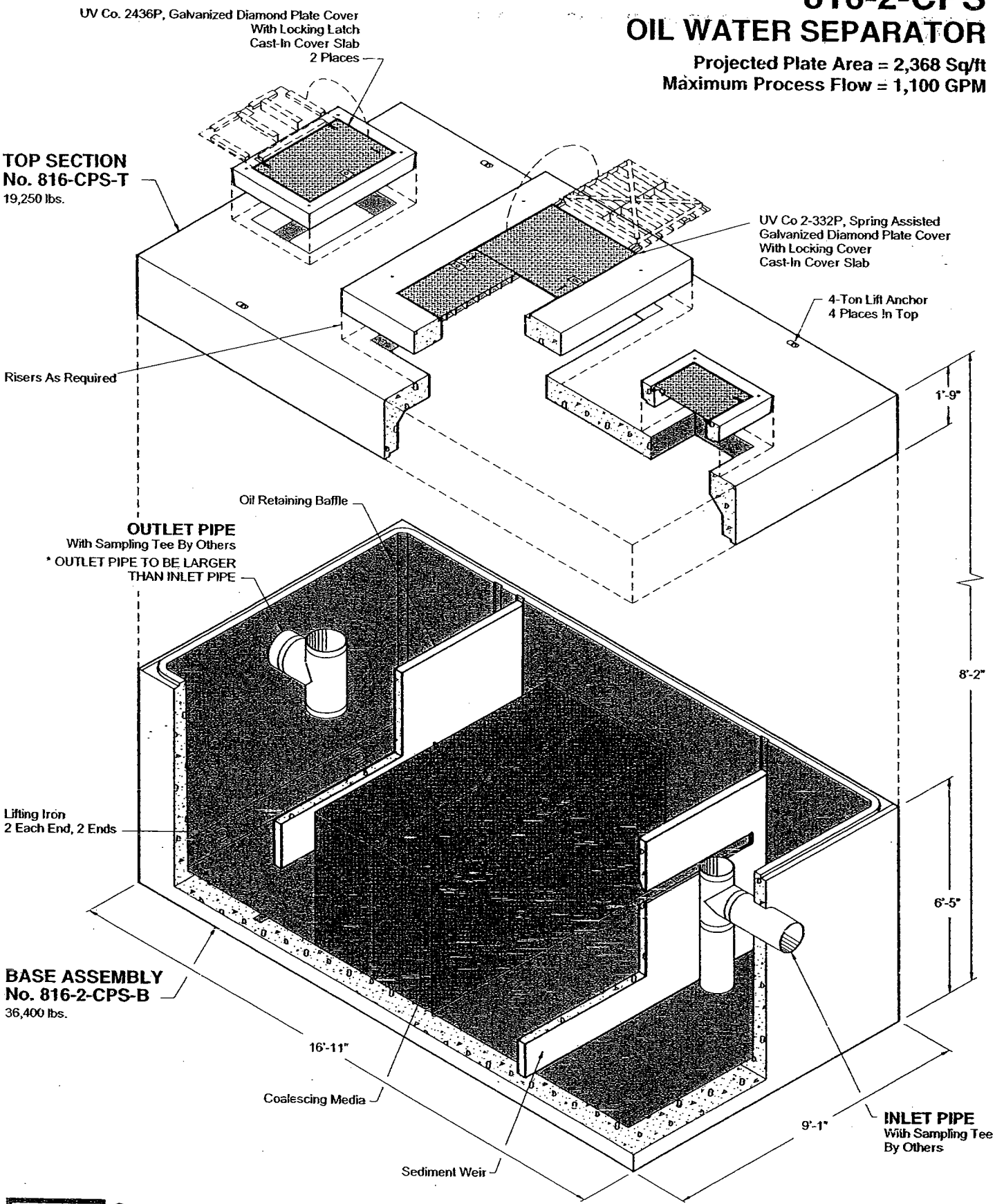

®

UTILITY VAULT COMPANY

P.O. BOX 588
Auburn, Washington 98071-0588

Phone (253) 839-3500
Fax (253) 735-4201

For Details Of Access Covers, See COVER Section.

*** ITEMS SHOWN ARE SUBJECT TO CHANGE WITHOUT NOTICE.**

FOR DETAILS SEE REVERSE SIDE.

Copyright © 1995 Oldcastle Precast, Inc., All Rights Reserved

816-2-CPS
OIL WATER SEPARATOR

Projected Plate Area = 2,368 Sq/ft
Maximum Process Flow = 1,100 GPM

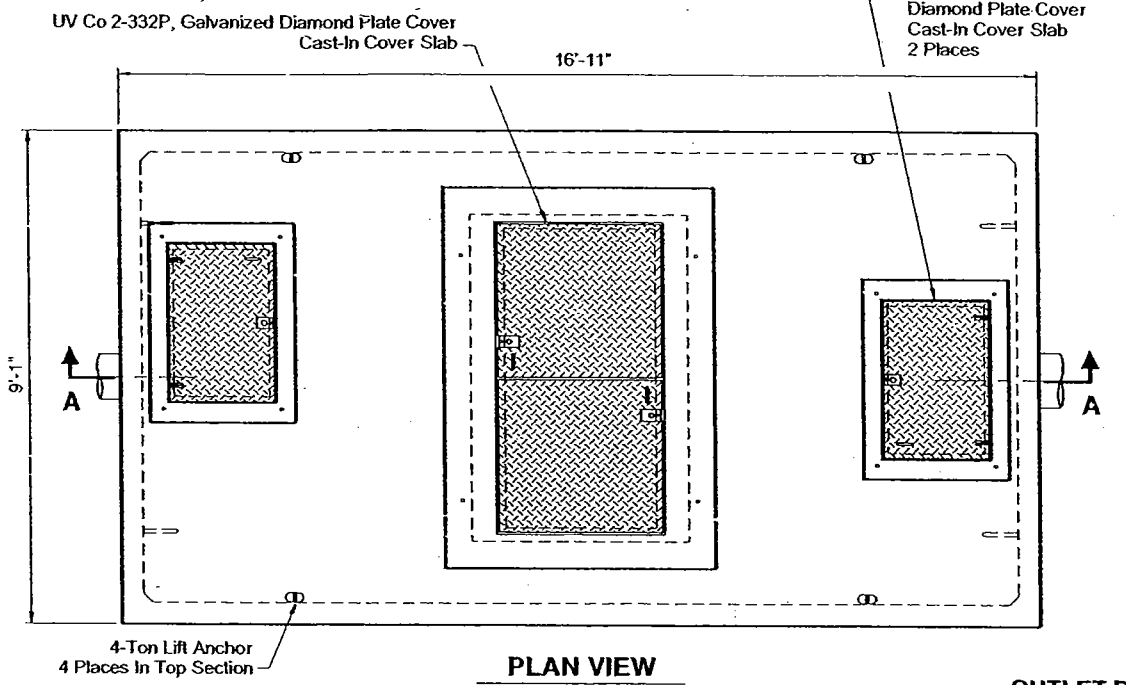

PLAN VIEW

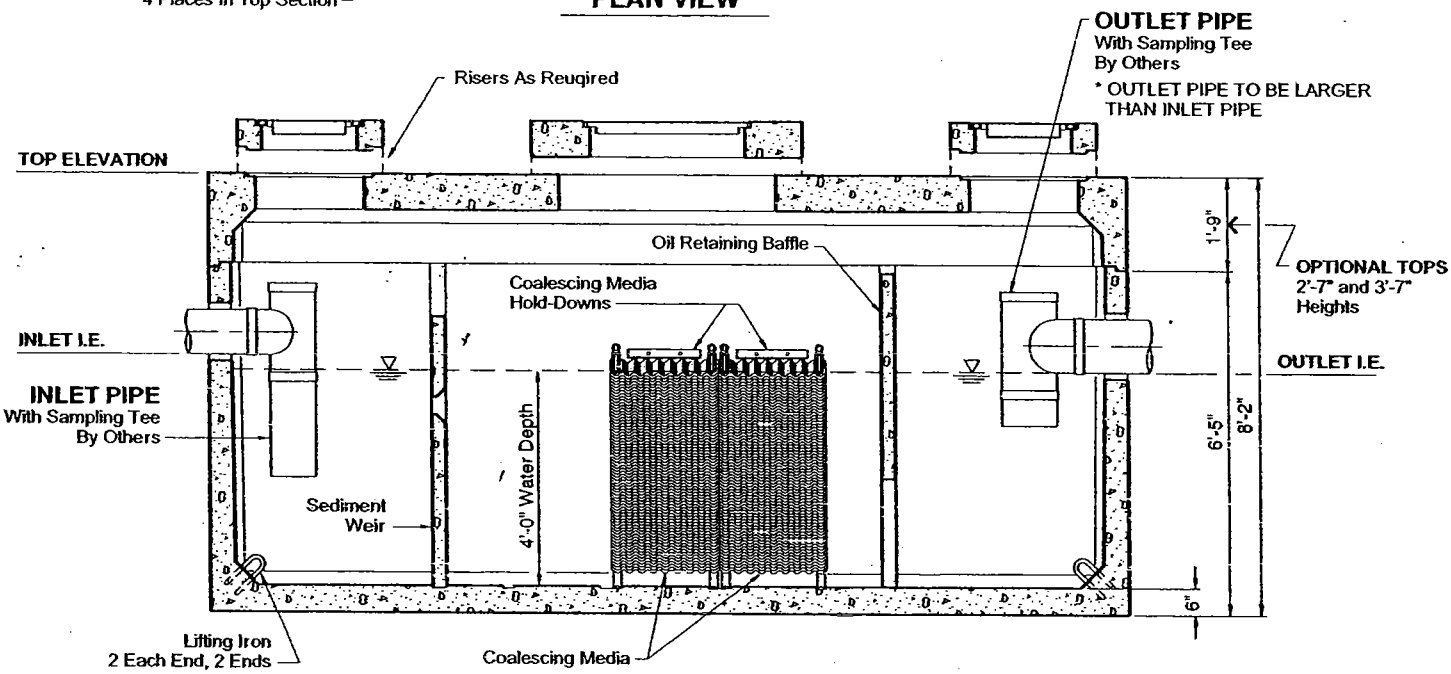

SECTION AA

STRUCTURAL NOTES:

1. Concrete: 28 Day Compressive Strength f'c = 6000 psi
2. Rebar: ASTM A-615 Grade 60
3. Mesh: ASTM A-185 Grade 65
4. Design: ACI-318-89 Building Code
   ASTM C-857 "Minimum Structural Design Loading For Underground Precast Concrete Utility Structures"
5. Loads: H-20 Truck Wheel w/ 30% Impact Per AASHTO

GENERAL NOTES:

1. All Baffles and Weirs To Be Precast Concrete
2. Static Water Depth = 4'-0"
3. Contractor To:
   Supply and Install All Piping & Sampling Tees
   Grout In All Pipes
   Fill w/ CLean Water Prior To "Start-Up" Of System
   Verify All Blockout Sizes and Locations

INFORMATION NEEDED:

- Top Of Separator Elevation _____
- Inlet Pipe Size _____
- Inlet Pipe Elevation _____
- Outlet Pipe Size _____
- Outlet Pipe Elevation _____

BASIC DESIGN INFORMATION:

INFLUENT CHARACTERISTICS -
Oil Specific Gravity = 0.88
Operating Temperature = 50°
Influent Oil Concentration = 100 ppm
Mean Oil Droplet Size = 130 micron
0.033 ft/min Oil Rise Rate
Designed Per Washington State Department Of Ecology

FLOW RATE	EFFLUENT QUALITY	100% COLLECTED SIZE
585 GPM	10 ppm	60 Micron

816-3-CPS
OIL WATER SEPARATOR

Projected Plate Area = 3,552 Sq/ft
Maximum Process Flow = 1,100 GPM

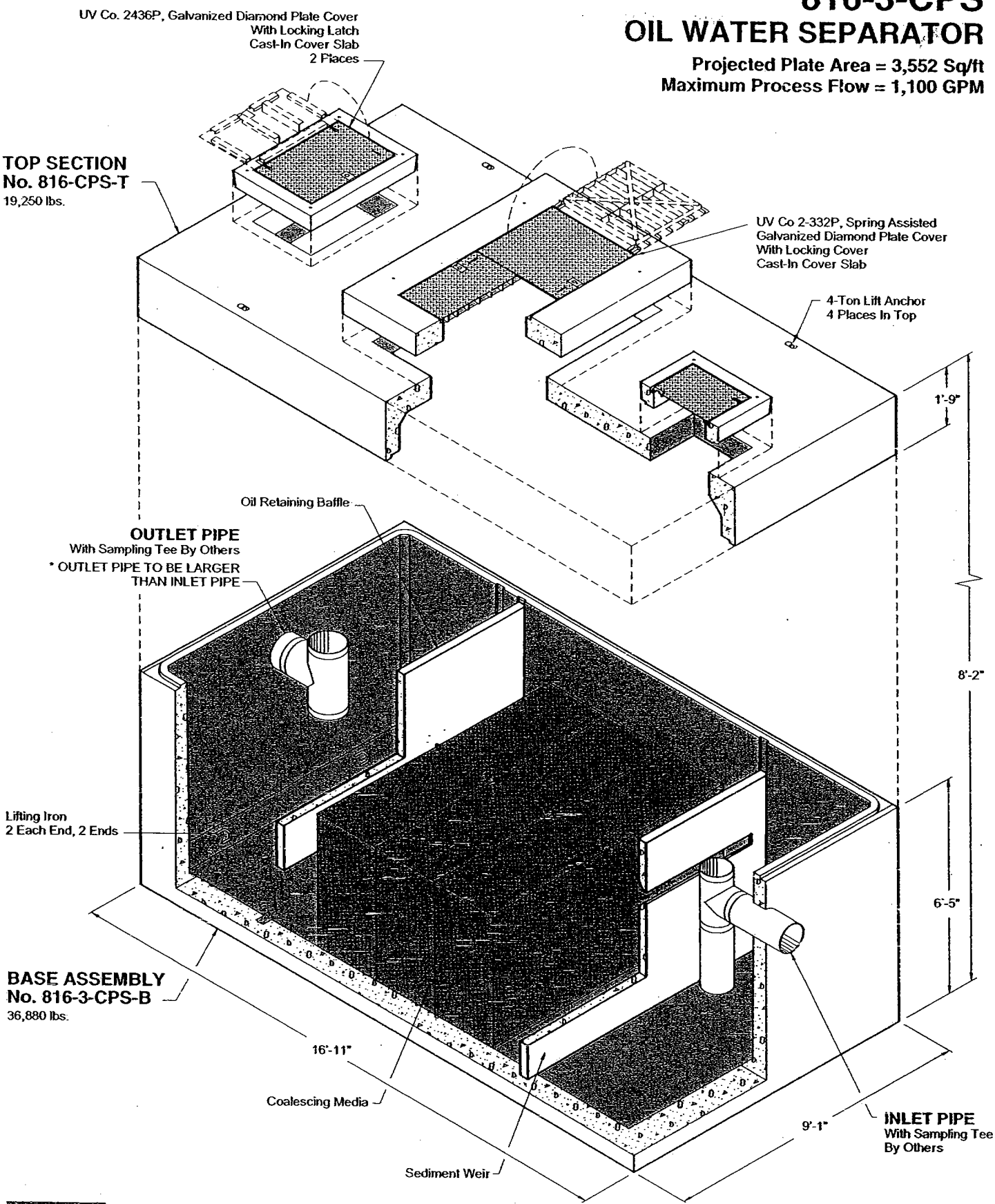

®
UTILITY VAULT COMPANY
P.O. BOX 588
Auburn, Washington 98071-0588
Phone (253) 839-3500
Fax (253) 735-4201

For Details Of Access Covers, See COVER Section.

*** ITEMS SHOWN ARE SUBJECT TO CHANGE WITHOUT NOTICE.**

FOR DETAILS SEE REVERSE SIDE.

Copyright © 1995 Oldcastle Precast, Inc., All Rights Reserved

Issue: January, 1996

816-3-CPS
OIL WATER SEPARATOR

Projected Plate Area = 3,552 Sq/ft
Maximum Process Flow = 1,100 GPM

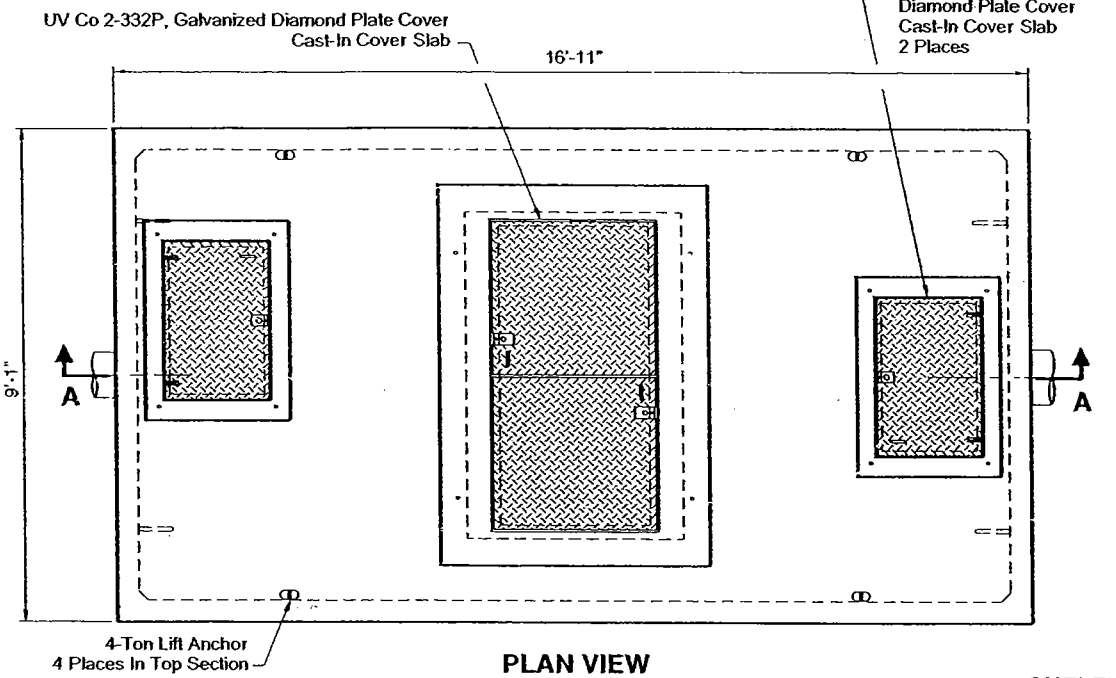

PLAN VIEW

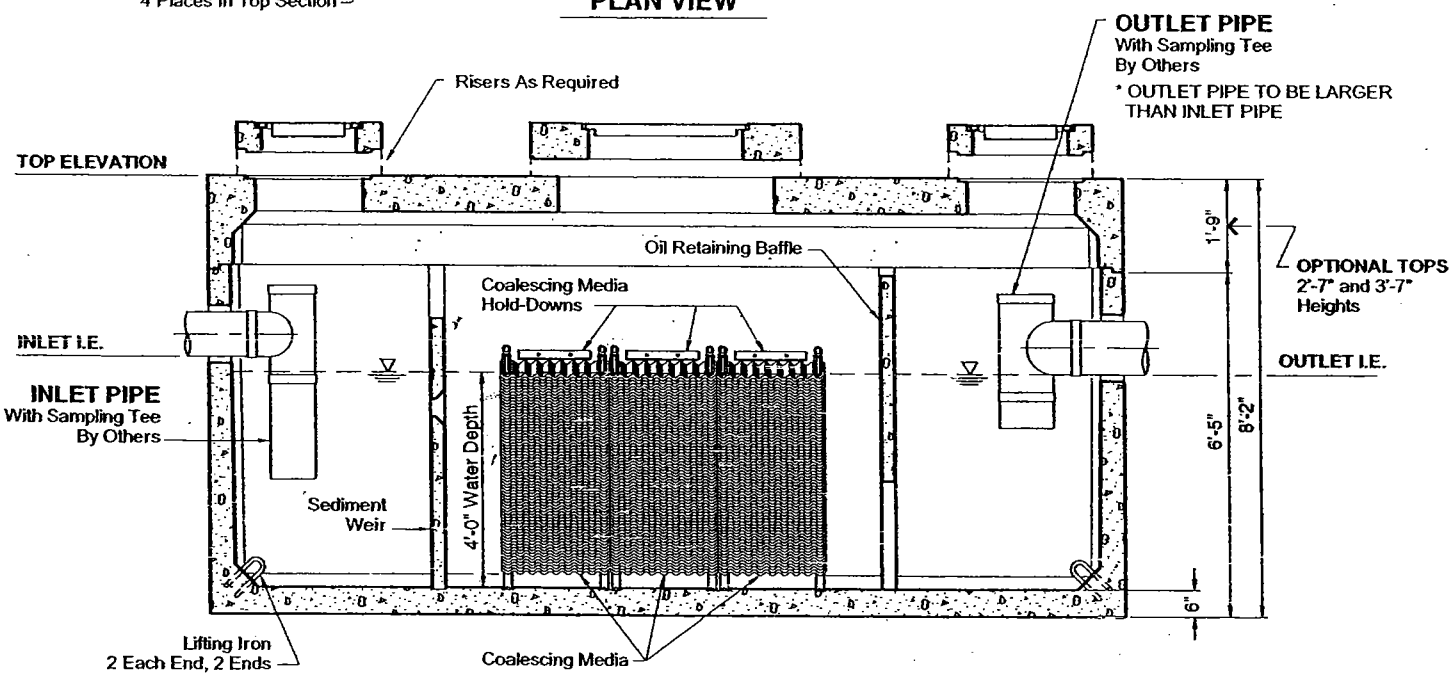

SECTION AA

STRUCTURAL NOTES:

1. Concrete: 28 Day Compressive Strength f'c = 6000 psi
2. Rebar: ASTM A-615 Grade 60
3. Mesh: ASTM A-185 Grade 65
4. Design: ACI-318-89 Building Code
   ASTM C-857 "Minimum Structural Design Loading For Underground Precast Concrete Utility Structures"
5. Loads: H-20 Truck Wheel w/ 30% Impact Per AASHTO

GENERAL NOTES:

1. All Baffles and Weirs To Be Precast Concrete
2. Static Water Depth = 4'-0"
3. Contractor To:
   Supply and Install All Piping & Sampling Tees
   Grout In All Pipes
   Fill w/ CLean Water Prior To "Start-Up" Of System
   Verify All Blockout Sizes and Locations

INFORMATION NEEDED:

- Top Of Separator Elevation _____
- Inlet Pipe Size _____
- Inlet Pipe Elevation _____
- Outlet Pipe Size _____
- Outlet Pipe Elevation _____

BASIC DESIGN INFORMATION:

INFLUENT CHARACTERISTICS -
Oil Specific Gravity = 0.88
Operating Temperature = 50°
Influent Oil Concentration = 100 ppm
Mean Oil Droplet Size = 130 micron
0.033 ft/min Oil Rise Rate
Designed Per Washington State Department Of Ecology

FLOW RATE	EFFLUENT QUALITY	100% COLLECTED SIZE
877 GPM	10 ppm	60 Micron

Product Notes

ADS
ADVANCED DRAINAGE SYSTEMS, INC.

Product Note 3.107

Re: Specification for Smooth Interior Corrugated Polyethylene Pipe

Date: February 1999

This specification applies to high density polyethylene corrugated pipe with an integrally formed smooth waterway. Nominal sizes for which this specification is acceptable are 100-1500 mm (4-60 inch) diameters. Sizes 100-1500 mm (4-60 inch) shall be either AASHTO Type "S" or Type "D" as follows. Sizes 100-1050 mm (4-42 inch) designated as AASHTO Type "S" (N-12) shall have a full circular cross-section, with an outer corrugated pipe wall and an essentially smooth inner wall (waterway). Corrugations for Type "S" sizes 100-1050 mm (4-42 inch) shall be annular (N-12). Sizes 1050-1500 mm (42-60 inch) designated as AASHTO Type "D" (N-12HC) shall consist of an essentially smooth waterway braced circumferentially with circular ribs which are formed simultaneously with an essentially smooth outer wall. The 1050-1500 mm (42-60 inch) (N-12HC) sizes shall conform to AASHTO Type "D" (which describes dual wall pipe with a smooth waterway).

Pipe manufactured for this specification shall comply with the requirements for test methods, dimensions and markings found in AASHTO Designations M252, M294 and MP7-97. Pipe and fittings shall be made from virgin PE compounds which conform with the applicable current edition of the AASHTO Material Specifications for cell classification as defined and described in ASTM D3350.

The minimum parallel plate stiffness values when tested in accordance with ASTM D2412 shall be as follows:

Diameter (nominal)	Pipe Stiffness (minimum)	Diameter (nominal)	Pipe Stiffness (minimum)
100 mm (4")	340 kN/m² (49 pii)	600 mm (24")	235 kN/m² (34 pii)
150 mm (6")	340 kN/m² (49 pii)	750 mm (30")	195 kN/m² (28 pii)
200 mm (8")	340 kN/m² (49 pii)	900 mm (36")	150 kN/m² (22 pii)
250 mm (10")	340 kN/m² (49 pii)	1050 mm (42")	140 kN/m² (20 pii)
300 mm (12")	345 kN/m² (50 pii)	1200 mm (48")	125 kN/m² (18 pii)
375 mm (15")	290 kN/m² (42 pii)	1500 mm (60")	95 kN/m² (14 pii)
450 mm (18")	275 kN/m² (40 pii)		

The fittings shall not reduce or impair the overall integrity or function of the pipeline. Fittings may be either molded or fabricated. Common corrugated fittings include in-line joint fittings, such as couplers and reducers, and branch or complimentary assembly fittings such as tees, wyes and end caps. These fittings may be installed by various methods such as snap-on, bell and spigot, bell — bell and wrap around couplers. Couplers shall provide sufficient longitudinal strength to preserve pipe alignment and prevent separation at the joints. Only fittings supplied or recommended by the manufacturer shall be used. Where designated on the plans or project specifications, an elastomeric gasket meeting the requirements of ASTM F477 shall be supplied.

Installation of the pipe specified above shall be in accordance with either AASHTO Section 30 or ASTM Recommended Practice D2321 as described elsewhere in these specifications and as recommended by the manufacturer.

3300 RIVERSIDE DRIVE COLUMBUS, OH 43221 (614) 457-3051 http://www.ADS-pipe.com

ADS N-12 PRODUCT INFORMATION SHEET

NOMINAL DIAMETER	INSIDE DIAMETER, AVERAGE	OUTSIDE DIAMETER, AVERAGE	INNER LINER THICKNESS, MINIMUM	MINIMUM PIPE STIFFNESS @ 5% DEFLECTION	WEIGHT kg./6m (lbs./20 ft.)	AREA mm²/mm	"I" cm⁴/cm	"C" mm
100 mm (4")	104 mm (4.10")	120 mm (4.78")	0.5 mm (0.020")	340 kN/m² 49 psi	3.60 kg (8.10 lbs)	1.59 (0.063 in²/in)	0.010 (0.0006 in⁴/in)	3.06 (0.12 in)
150 mm (6")	152 mm (6.00")	176 mm (6.92")	0.5 mm (0.020")	340 kN/m² 49 psi	7.74 kg (17.00 lbs)	2.15 (0.085 in²/in)	0.053 (0.0021 in⁴/in)	4.94 (0.19 in)
200 mm (8")	200 mm (7.90")	233 mm (9.11")	0.6 mm (0.024")	340 kN/m² 49 psi	13.97 kg (30.80 lbs)	2.75 (0.108 in²/in)	0.078 (0.005 in⁴/in)	6.36 (0.25 in)
250 mm (10")	251 mm (9.90")	297 mm (11.36")	0.6 mm (0.024")	340 kN/m² 49 psi	20.50 kg (45.20 lbs)	3.49 (0.164 in²/in)	0.131 (0.008 in⁴/in)	7.38 (0.29 in)
300 mm (12")	308 mm (12.15")	367 mm (14.45")	0.9 mm (0.035")	345 kN/m² 50 psi	28.96 kg (63.80 lbs)	5.50 (0.217 in²/in)	0.574 (0.035 in⁴/in)	10.92 (0.43 in)
375 mm (15")	380 mm (14.96")	443 mm (17.37")	1.0 mm (0.039")	290 kN/m² 42 psi	42.00 kg (92.50 lbs)	6.91 (0.272 in²/in)	0.901 (0.055 in⁴/in)	8.21 (0.32 in)
450 mm (18")	459 mm (18.07")	536 mm (21.20")	1.3 mm (0.051")	275 kN/m² 40 psi	58.38 kg (128.60 lbs)	6.93 (0.273 in²/in)	1.327 (0.081 in⁴/in)	14.48 (0.57 in)
600 mm (24")	612 mm (24.08")	719 mm (27.80")	1.5 mm (0.059")	235 kN/m² 34 psi	101.97 kg (224.60 lbs)	8.23 (0.324 in²/in)	2.275 (0.137 in⁴/in)	18.80 (0.74 in)
750 mm (30")	762 mm (30.00")	892 mm (35.10")	1.5 mm (0.059")	195 kN/m² 28 psi	139.97 kg (308.30 lbs)	9.60 (0.378 in²/in)	4.539 (0.277 in⁴/in)	21.84 (0.86 in)
900 mm (36")	914 mm (36.00")	1059 mm (41.70")	1.7 mm (0.067")	150 kN/m² 22 psi	163.98 kg (361.20 lbs)	10.19 (0.401 in²/in)	6.555 (0.400 in⁴/in)	25.40 (1.00 in)
1050 mm (42") Type S	1054 mm (41.40")	1212 mm (47.70")	2.54 mm (0.100")	140 kN/m² 20 psi	240.62 kg (530.00 lbs)	11.64 (0.458 in²/in)	9.373 (0.572 in⁴/in)	30.73 (1.21 in)
1050 mm (42") Type D	1054 mm (41.50")	1187 mm (46.75")	1.8 mm (0.070")	140 kN/m² 20 psi	240.62 kg (530.00 lbs)	14.86 (0.585 in²/in)	9.685 (0.591 in⁴/in)	35.32 (1.39 in)
1200 mm (48") Type D	1208 mm (47.55")	1339 mm (52.70")	1.8 mm (0.070")	125 kN/m² 18 psi	290.56 kg (640.00 lbs)	14.76 (0.581 in²/in)	10.090 (0.616 in⁴/in)	33.02 (1.30 in)
1500 mm (60") Type D	1514 mm (59.6")	1664 mm (65.5")	2.0 mm (0.080")	95 kN/m² 14 psi	545.49 kg (1200 lbs)	17.15 (0.675 in²/in)	13.365 (0.816 in⁴/in)	36.83 (1.45 in)

Date: January 1999

HDPE Drainage Products

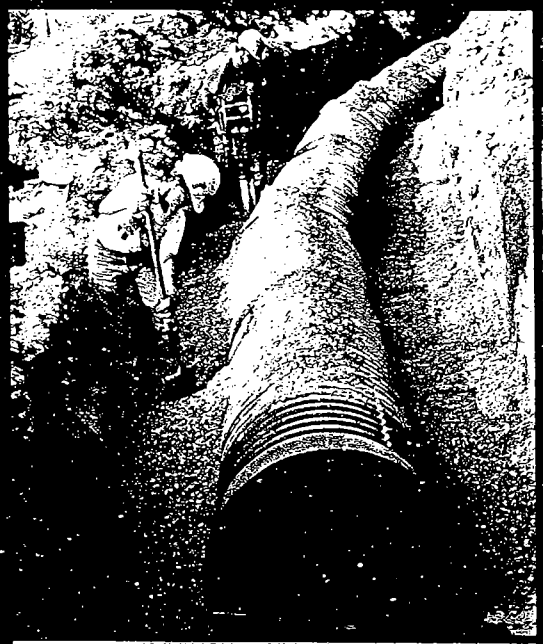

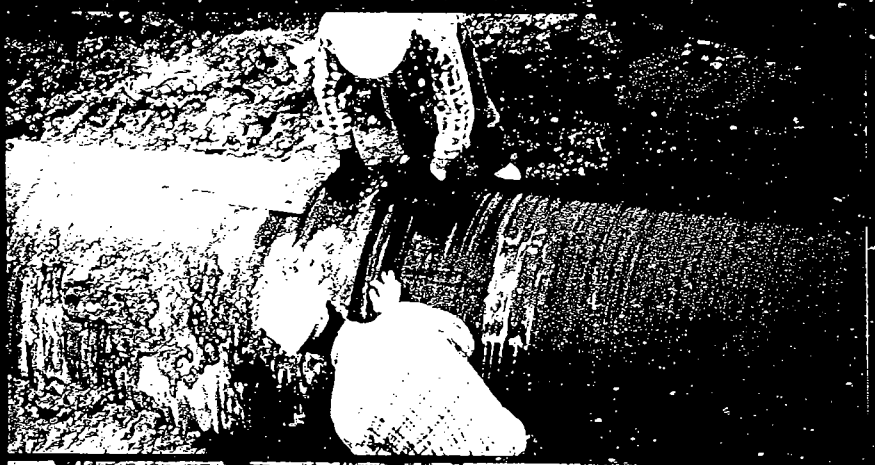

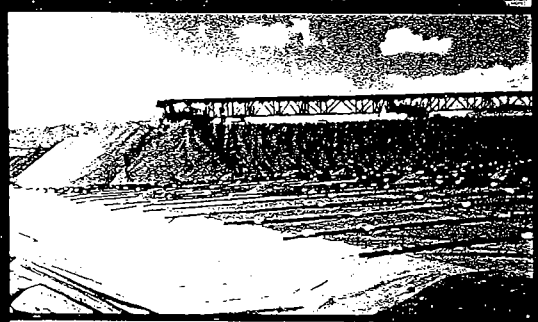

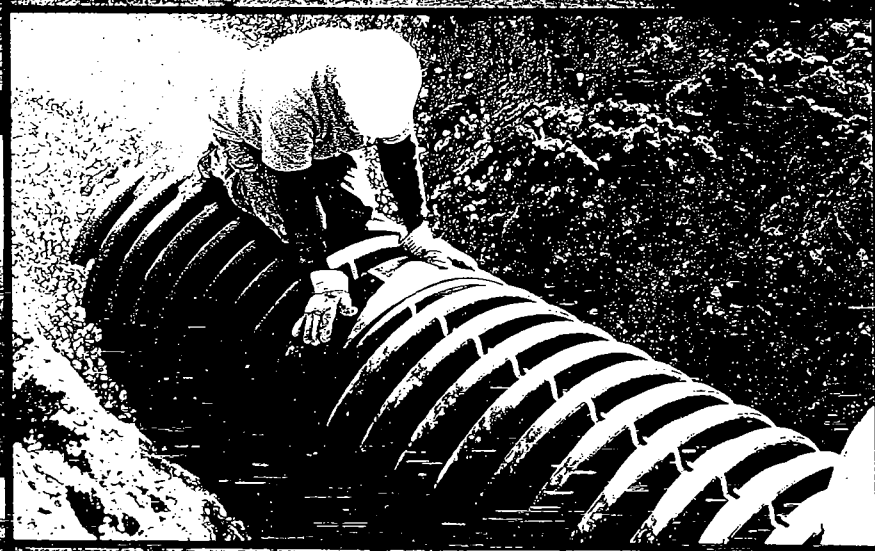

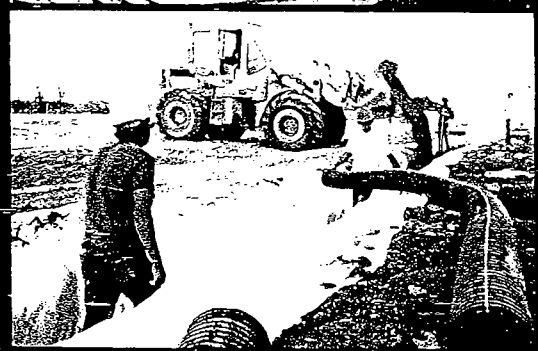

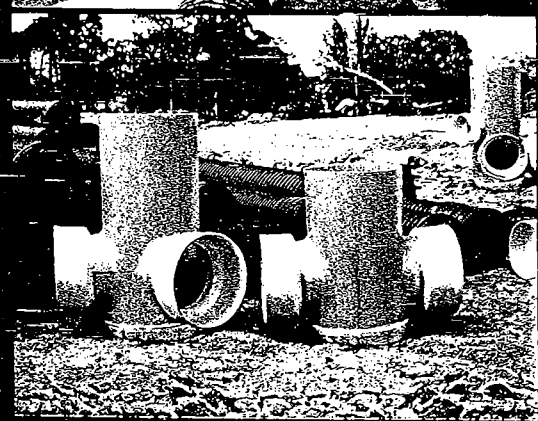

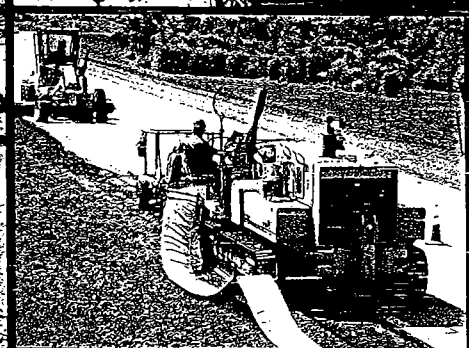

Helping The World Move Water

ADS®

ADVANCED DRAINAGE SYSTEMS, INC.

Advanced Drainage Systems: the world's largest manufacturer of polyethylene drainage products

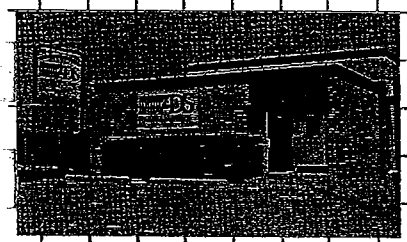

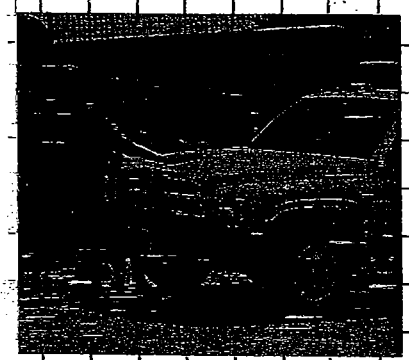

The science of materials engineering has totally changed the complexion of many U.S. industries. Nowhere is this more evident than in the construction market, where plastics are outperforming and outlasting traditional metal and mineral materials in a wide range of applications.

Without doubt, the workhorse of construction plastics is High Density Polyethylene (HDPE). And the company that has led the development of HDPE for drainage products is Advanced Drainage Systems, with a record of painstaking research and breakthrough applications dating back to the 1960s.

Today, more than six billion feet of ADS pipe are in service around the world. You can see ADS products everywhere on major construction sites with drainage requirements. The distinctive Green Stripe on the pipe is your assurance of the best in quality and service from the world leader in polyethylene drainage products.

Markets we serve

ADS HDPE drainage products are used in a wide variety of end-use applications:

- Storm and sanitary sewers
- Highway drainage
- Agriculture
- Recreation
- Mining
- Septic systems and leach fields
- Landfills and waste management
- Retention/detention systems
- Residential drainage

Customer service

ADS operates 21 manufacturing facilities throughout the U.S. Custom design and special fabrication work is handled through production centers established at many of these plants.

Local requirements are promptly serviced through a nationwide network of more than 30 stocking Customer Service Centers. ADS

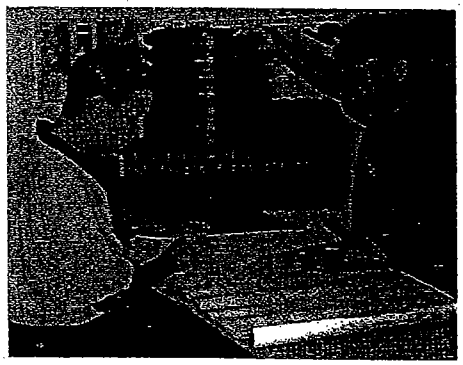

representatives are on hand to provide factory-direct product and installation information. An experienced group of regional engineers serves government agencies, private consultants, and contractors with specification guidance, project design assistance, and overall technical support.

The following pages highlight the complete line of ADS drainage products, and explain the considerable advantages of HDPE for drainage applications.

High Density Polyethylene: The preferred pipe material

Pipe is generally divided into two categories: rigid and flexible. A pipe is rigid when it will not accept any deflection without structural distress. Examples are concrete, clay, and cast iron. Flexible pipe will accept at least 2 percent deflection without structural distress. Steel, aluminum, and thermoplastics fall into this category. We can further divide flexible pipe into elastic materials, which are the metal pipes, and viscoelastic, represented by thermoplastic materials.

While rigid pipe can be traced back to the Roman Empire, high density polyethylene drainage pipe has only been in use since the 1950s. In this relatively brief period, HDPE has been the subject of exhaustive laboratory tests and field experiments. In real-world installations, the product has built an impressively successful record of trouble-free performance.

Today, we see an accelerating trend among construction engineers to replace steel and concrete piping with polyethylene because of its superior mechanical and chemical properties and cost-effective handling characteristics.

1. **Structural strength.** HDPE's toughness and flexibility enable it to withstand fill heights of 100 feet or more. Tests at Utah State University show that heavy soil loads will fracture the wall of rigid pipe, but under identical conditions, will produce only moderate deflection in flexible polyethylene pipe. HDPE will not crack or break during proper installation, and maintains its impact strength at sub-zero temperatures.

2. **Abrasion resistance.** The following chart indicates that the

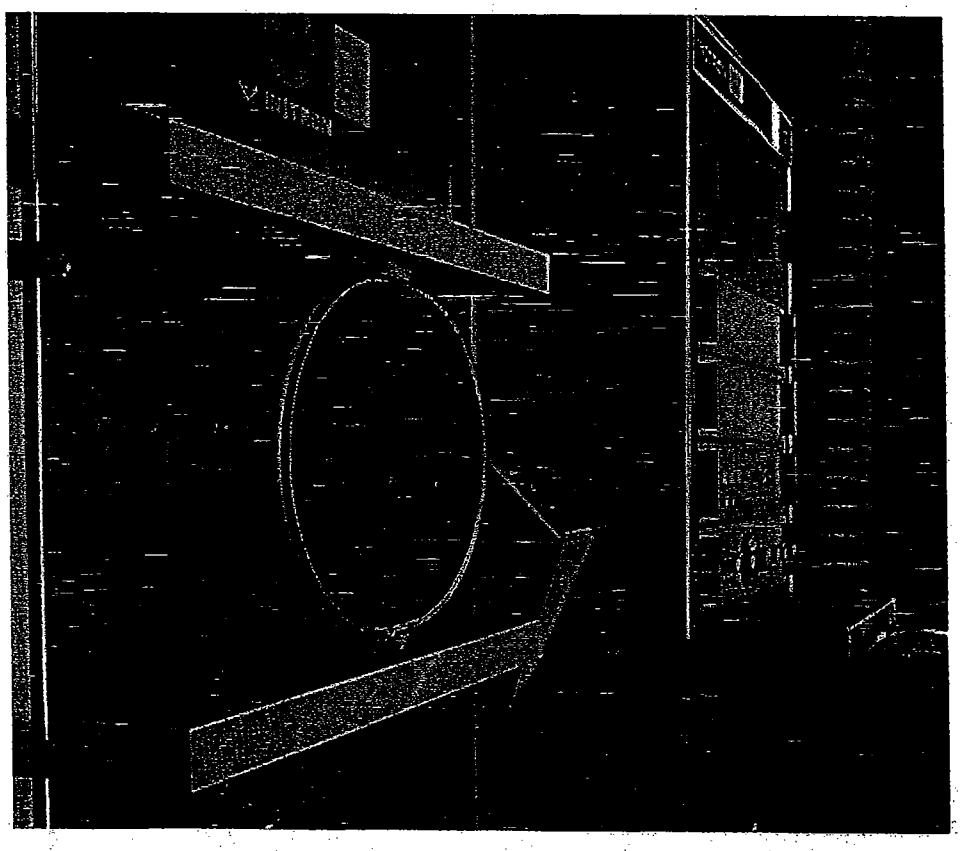

material loss rate of HDPE is only 15% to 25% that of reinforced concrete under controlled experiments. And decades of in-situ testing and real-world installations have demonstrated polyethylene's interior toughness. It is used successfully with harsh mining and dredging slurries, and is virtually immune to damage from even the most aggressive sewer cleaning tools.

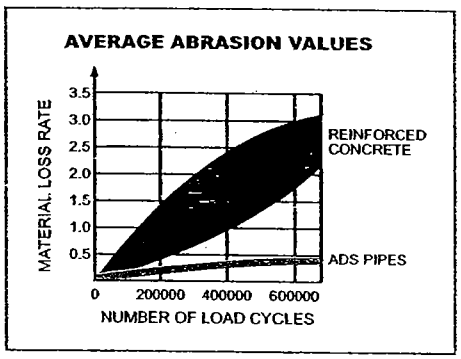

3. **Light weight.** Polyethylene weighs 50 to 75% less than comparable steel pipe, and is about one-tenth the weight of concrete. This translates into easier handling, smaller work crews, reduced heavy equipment requirements, and improved safety.

4. **Chemically inert.** HDPE is highly resistant to corrosion, and is immune to galvanic and electromechanical reaction. As seen in the diagram, polyethylene can safely be used with soils or effluents with a pH range of 1 to 14.

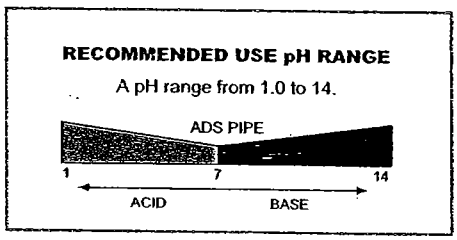

Additional information available from ADS:

1. *ASTM D 3350, "Standard Specification for Polyethylene Plastics Pipe and Fittings Materials."*
2. *ADS Tech Note 2.108, "Chemical Resistance Properties of Corrugated Polyethylene Pipe, Fittings, and Manholes."*
3. *ADS Tech Note 2.116, "Abrasion Resistance of Piping Systems."*
4. *"Practical Approach to the Study of Polyolefin Weatherability," H. J. Martinovich and G. H. Hill.*

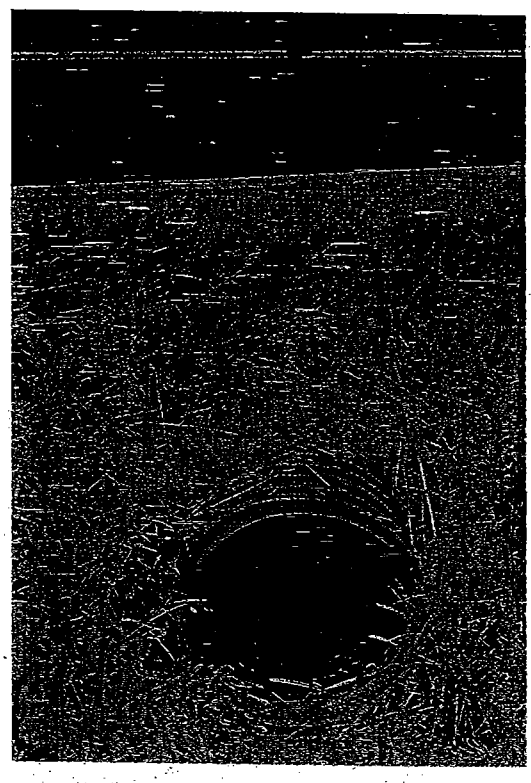

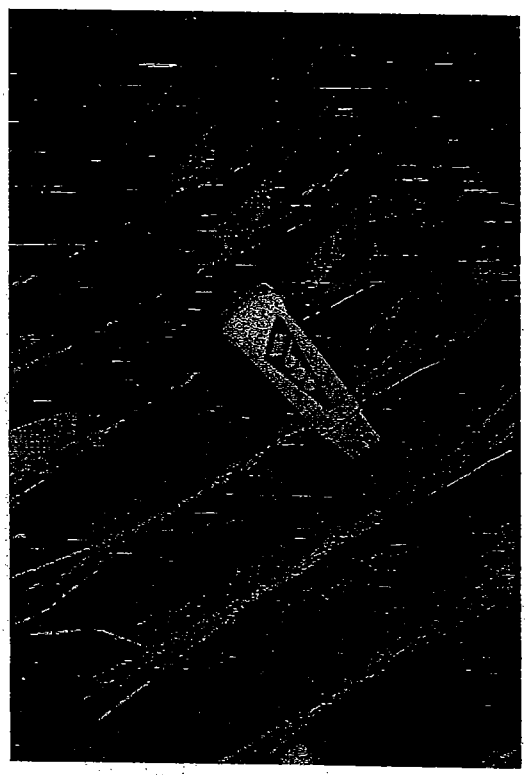

HDPE pipe's durability is dramatically demonstrated by this highway cross drain installed in 1981 near an abandoned strip mine. The metal pipe used prior to this time had to be replaced every few years due to the highly acidic (an average pH of 2.1) and abrasive run-off from the mine. Today, after more than 17 years, the polyethylene cross drain shows no sign of needing replacement.

N-12® Smooth Interior Pipe

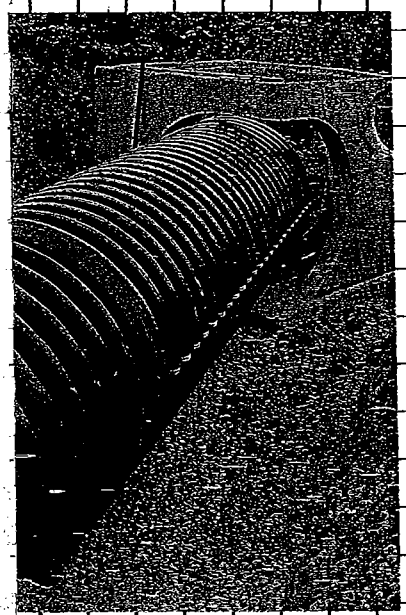

N-12 has built an impressive service record in storm water and other drainage applications where hydraulics are important and durability is critical. The pipe is offered in diameters from 4" through 60", in nominal 20 ft. lengths.

Corrugated exterior adds strength

The natural toughness of HDPE is enhanced by the corrugated exterior which increases the structural strength of N-12 pipe. It is designed for use under both H20 and E80 live loads, or with fill heights of 50 feet or more. In fact, field research shows the pipe performing well at depths exceeding 100 feet. Even under harsh backfill conditions and shifting soils, N-12 has continued to give outstanding performance.

Smooth interior provides superior flow

In order to meet the most demanding hydraulic requirements, N-12 is manufactured with a smooth inner wall. This design insures maximum flow capacity, and PE's resistance to abrasion and corrosion will sustain this capacity for years into the future. With a recommended 0.012 rating, the pipe is ideal for applications requiring low Mannings "n" values.

Unparalled joint integrity

All N-12 pipe features quick and easy ProLink bell-and-spigot joints with rubber O-ring gaskets conforming to ASTM F 477. The **N-12 ProLink WT®** series is a water-tight 4" through 48" system that meets ASTM D 3212 @ 10.8 psi, even when deflected and misaligned.

N-12 ProLink Ultra® pipe

The industry's best soil-tight system is offered by N-12 ProLink Ultra pipe in 12" through 42" diameters. Its built-in gasketed bell joint is the same O.D. as the pipe, so there is no need to dig bell holes to hold grade in the trench. ProLink Ultra is manufactured in 6m (19' 8") laying lengths.

Convenience on the jobsite

N-12's light weight leads to a number of job site economies: more pipe per delivery truck, easier handling, smaller crews, less heavy equipment, less pipe damage, and better safety. The pipe cuts easily and requires no beveling for joining.

Additional information available from ADS:

1. *AASHTO Specification M-252*
2. *AASHTO Specification M-294*
3. *ASTM D-2412*
4. *ASTM D-3212*
5. *ASTM F-477*
6. *ADS Tech Note 2.115, "Comparative Pipe Stiffness"*
7. *ADS Form # L-1096, "ADS N-12 & N-12 HC Pipe"*
8. *ADS Tech Note 4.103, "Plastic Pipe Design" by James B. Goddard*
9. *ADS Tech Note 2.120, "Storm water Retention/Detention Systems" by Ed Kamphek P.E.*
10. *PennDOT Deep Burial Study*

N-12®HC High Capacity Large Diameter Pipe

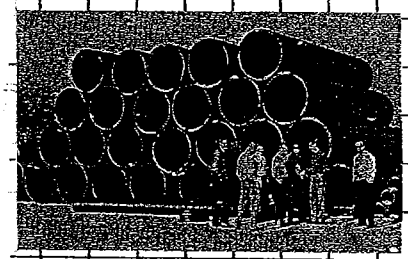

Eight years of intensive design and production testing have led to the introduction of N-12®HC 42", 48" and 60" HDPE pipe. It features a smooth inner wall for efficient high-volume flow, and a smooth exterior for structural integrity.

Innovative wall design

The wall section resembles a honeycomb, braced circumferentially with closely spaced circular ribs. This design increases both pipe stiffness to handle installation stresses, and structural strength for heavy loads, without excessive increases in pipe weight. In tests at Utah State University, a 20-foot section withstood soil pressures equivalent to 180 feet of cover. These results and others indicate that N-12 HC may have the most stable large diameter wall profile ever manufactured.

Integral, water-tight joints speed installation

Factory-installed bell-and-spigot joints with ASTM F 477 rubber O-ring gaskets provide water-tight connections meeting ASTM D 3212 @ 10.8 psi.

Long 20-foot lengths are easily transported (one truck can deliver 120 feet of 48" pipe), and require far fewer joints than concrete pipe in the same diameters. Its lightweight (only 640 lbs. per 20-foot section of 48" pipe) reduces the need for manpower and heavy equipment. Total installation time can be reduced by as much as 30% over equivalently-sized concrete pipe.

Additional information available from ADS:

1. AASHTO M294
2. AASHTO Specifications MP7
3. ASTM D 412
4. ASTM D 3212
5. ASTM F 477
6. ADS Tech Note 2.115, "Comparative Pipe Stiffness"
7. ADS Form # L 1096, "ADS N-12 & N-12 HC Pipe"
8. ADS Tech Note 4.103, "Flexible Pipe Design" by James B. Goddard

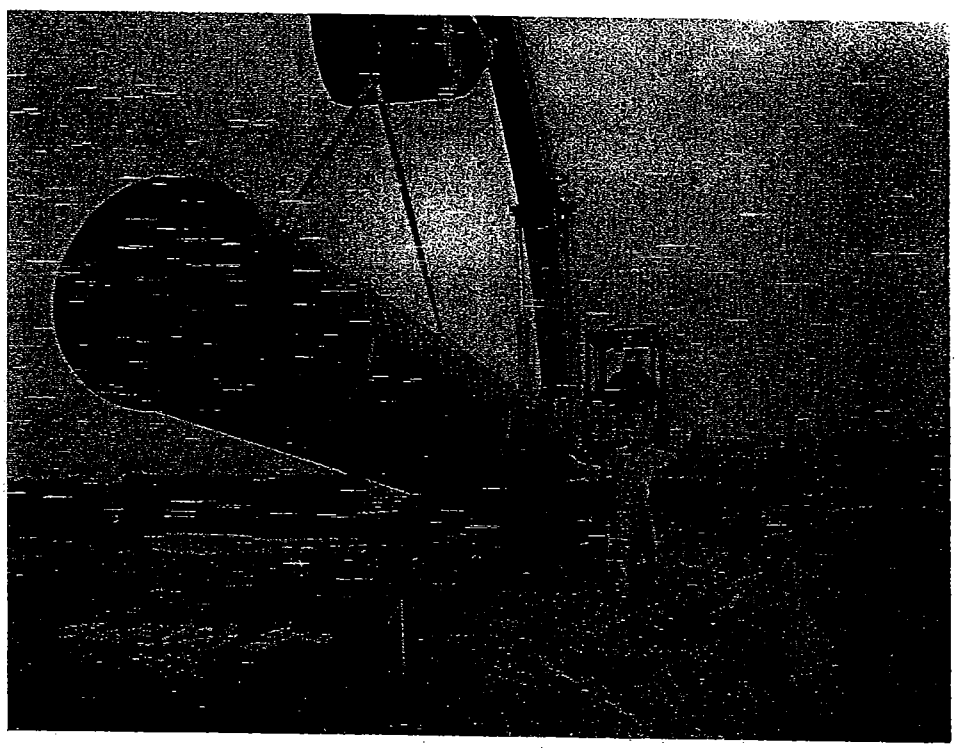

Couplings and Fittings

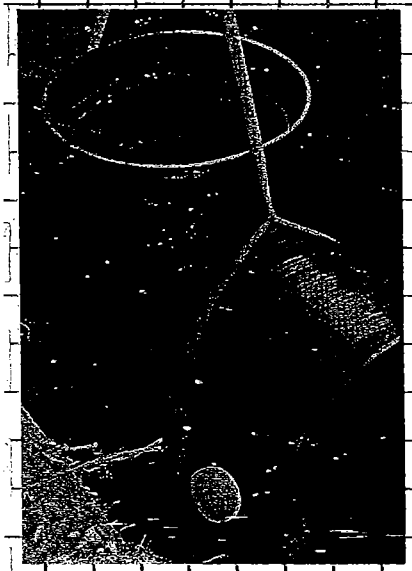

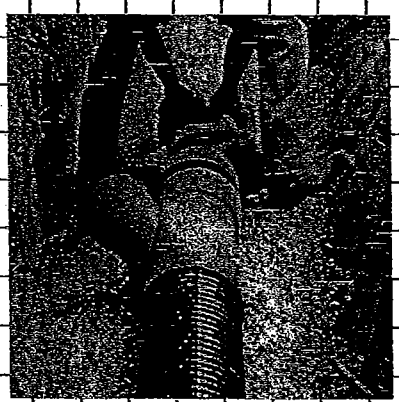

ADS offers the industry's most complete selection of joining systems for gravity-flow pipe. The Standard, Pro Link, and Series 35 lines provide varying degrees of soil and water tightness, so cost constraints can be more easily balanced with project requirements.

Standard Drainage Couplers and Fittings

For many less critical drainage applications, ADS standard split couplers and fabricated fittings will provide excellent performance at the lowest installed cost. Split couplers are often used for field repairs, and for slope drains where extra pull-out resistance is needed.

Standard and Fabricated Drainage Fittings

Split Couplings

Standard:
3" - 42"

Premium soil-tight with gasket:
12" - 42"

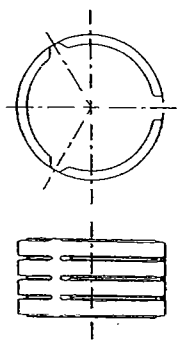

Standard Fabricated Fittings 4" - 42".
Many other patterns available.

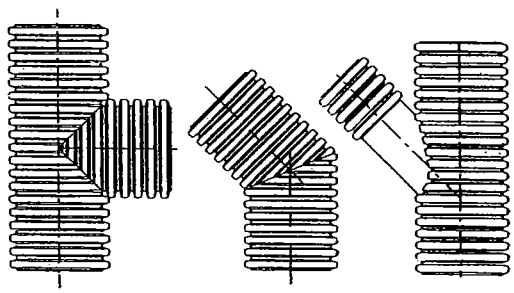

Custom Fabricated Fittings
Variety of configurations and diameters available, each engineered for specific applications.

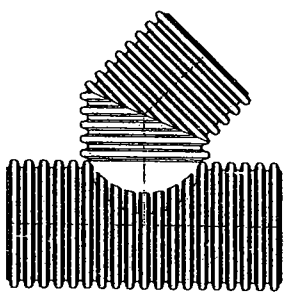

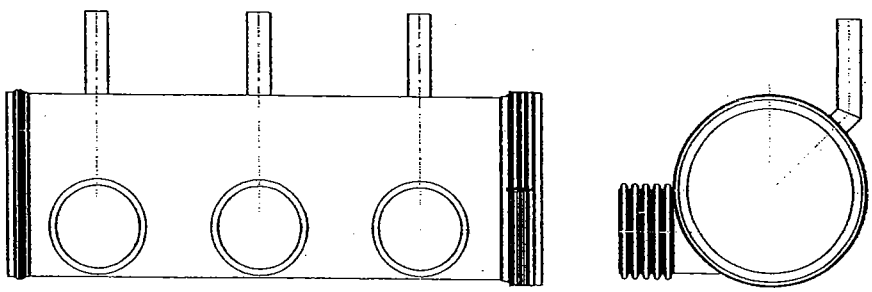

APPENDIX C

PRELIMINARY UNIT COSTS FOR STORMWATER STRUCTURES

Catch Basin
Piping Materials
Vault Sections
Manhole

APPENDIX C

PRELIMINARY UNIT COSTS FOR STORMWATER STRUCTURES

Detention Vault

Typical sections/schematics for proposed stormwater materials and structures are presented in Appendix B. The following outlines preliminary material unit costs. Final costs should be established at the time of final SMP design. The following costs are intended to provide planning level costs and budget information for proposed conceptual stormwater facilities. Unit costs provided below are from Utility Vault, Inc. (Utility Vault) and American Drainage System (ADS), Inc. Unit costs may vary over time. Final unit costs should be verified at the time of final design.

- $790 dollars per lineal length of vault. Assumes vault with the following dimensions: Length = 400 feet, width = 20 feet, and height varies from 6-8 feet. Cost includes delivery, and does not include install, access covers, grates, risers, ladders or piping (Utility Vault).
- $1,000 each for access manhole sections to the vault (24-inch diameter). The access manhole price includes everything (lid, riser, manhole casting and ladder). The structure is very similar to a manhole, but connects to the vault (looks just like a manhole from the surface). Note: Cannot use for a standard manhole/catch basin (Utility Vault).
- Catch basin prices are as follows (includes frame, cover, other components.), (Utility Vault):

  Type I (shallow, approximately 2 feet from finished grade to pipe IE) = $250
  Type IL = $350
  Type II = $650 (Same as a manhole)

- Oil Water Separators (OWS): Utility Vault (UV) recommends the CPS type (coalescing plate). Standard baffle type is available (but UV doesn't recommend them for storm drain discharge application), (Utility Vault). The costs for CPS OWS are as follows:

  183 gpm = $9,000
  585 gpm = $23,000
  900 gpm = $28,000

  Note: Calculated flows fall within these ranges. A baffle type is about half the price.

- Drainage/Tightline Piping (ADS). Price per LF, includes delivery, and pipe cost based on 2004 rates as follows:

8"	$2.50
10"	$3.25
12"	$4.00
15"	$6.50
18"	$7.50
24"	$12.50
30"	$17.00
36"	$24.00