# SUNSET MINE & MILLSITE

Mt. Baker-Snoqualmie National Forest
Snohomish County, Washington

## ENGINEERING EVALUATION/ COST ANALYSIS

February 6, 2008

Prepared For:
U.S. Forest Service

MSE
Millennium Science & Engineering, Inc.

# ENGINEERING EVALUATION/COST ANALYSIS

## Sunset Mine and Millsite
## Mount Baker-Snoqualmie National Forest, Washington

Prepared For:

USDA Forest Service
Mt. Hood National Forest Headquarters
16400 Champion Way
Sandy, Oregon 97055


Prepared by:

Millennium Science and Engineering, Inc.
1605 North 13th Street
Boise, Idaho 83702
(208) 345-8292

Principal Author: Michael Puett, P.E., Project Manager

Technical Reviewer: Paul Hunter, P.G.


**February 2008**

**Table of Contents**


**Section** **Page**

**ACRONYMS AND ABBREVIATIONS** ..... **iii**

**EXECUTIVE SUMMARY** ..... **v**

**1.0 INTRODUCTION** ..... **1**

**2.0 SITE CHARACTERIZATION** ..... **1**
- 2.1 Surrounding Land Use and Populations ..... 1
- 2.2 Data Gap Investigation ..... 2
- 2.3 Source, Nature and Extent of Contamination ..... 3
- 2.4 Risk Assessment Conclusion ..... 5
  - 2.4.1 Human Health Risk Assessment ..... 6
  - 2.4.2 Ecological Risk Assessment ..... 6
  - 2.4.3 Physical Hazards ..... 7

**3.0 SITE CLEANUP CRITERIA** ..... **8**
- 3.1 Applicable or Relevant and Appropriate Requirements ..... 8
  - 3.1.1 Water, Soil, and Sediment Quality Standards ..... 9
  - 3.1.2 Solid/Dangerous Waste (Solids) Disposal Requirements ..... 10
  - 3.1.3 Forest Plan Standard and Guidelines (FP S&Gs) ..... 10
- 3.2 Risk-based Cleanup Concentrations ..... 10

**4.0 IDENTIFICATION OF REMOVAL ACTION OBJECTIVES** ..... **11**
- 4.1 Removal Action Justification ..... 12
- 4.2 Scope of Removal Action ..... 13
- 4.3 Removal Action Schedule ..... 13

**5.0 IDENTIFICATION AND ANALYSIS OF REMOVAL ACTION ALTERNATIVES** ..... **13**
- 5.1 Identification and Screening of Removal Action Options and Alternatives ..... 14
- 5.2 Analysis of Selected Removal Action Alternatives ..... 23
- 5.3 Identification of Data Gaps ..... 24

**6.0 COMPARATIVE ANALYSIS OF REMOVAL ACTION ALTERNATIVES** ..... **25**

**7.0 RECOMMENDED REMOVAL ACTION ALTERNATIVE** ..... **28**

**8.0 FOREST SERVICE DISCLAIMER** ..... **30**

**REFERENCES** ..... **32**

**TABLE OF CONTENTS**
**(continued)**

## TABLES

Table 1. Monthly Climatic Averages for Baring, Washington WSO
Table 2. Mine Waste Analytical Results Summary
Table 3. Background Soil Analytical Results Summary
Table 4. Surface Water Analytical Results Summary
Table 5. Sediment Analytical Results Summary
Table 6. Pore Water Analytical Results Summary
Table 7. Summary of Waste Volumes and Selected Metal Concentrations
Table 8. Surface Water Quality ARARs and Proposed Site Cleanup Criteria
Table 9. Soil Quality ARARs and Proposed Site Cleanup Criteria
Table 10. Sediment Quality ARARs and Proposed Site Cleanup Criteria
Table 11. Summary of Areas Exceeding Risk-based Cleanup Levels
Table 12. Removal Action Technology Screening Matrix
Table 13. Estimated Removal Action Cost Summary
Table 14. Data Gap Summary
Table 15. Comparative Analysis of Removal Action Alternatives

## FIGURES

Figure 1. Vicinity Map
Figure 2. Overall Site Map
Figure 3. Mill Site Repository
Figure 4. Ridge Repository
Figure 5. Reconstructed Channel
Figure 6. Settling Ponds
Figure 7. Bat Culvert Details

## APPENDICES

Appendix A. Site Photographs
Appendix B. Applicable or Relevant and Appropriate Requirements

## ACRONYMS AND ABBREVIATIONS

| | |
|---|---|
| μg/L | Microgram per liter |
| cfs | Cubic feet per second |
| cm/sec | Centimeter per second |
| cy | Cubic yard |
| gpm | Gallon per minute |
| mg/L | Milligram per liter |
| mg/kg | Milligram per kilogram |
| sf | Square foot |
| Kg $CaCO_3$ | Kilogram calcium carbonate |
| | |
| ABA | Acid base accounting |
| AGP | Acid generating potential |
| AMSL | Above mean sea level |
| ANP | Acid neutralizing potential |
| APA | Abbreviated Preliminary Assessment |
| ARAR | Applicable or Relevant and Appropriate Requirement |
| BMP | Best management practice |
| CERCLA | Comprehensive Environmental Response, Compensation & Liability Act |
| CES | Cascade Earth Sciences |
| CFR | Code of Federal Regulations |
| COI | Contaminant of interest |
| COPC | Contaminant of potential concern |
| COR | Contracting Officer's Representative |
| CPEC | Contaminant of potential ecological concern |
| EE/CA | Engineering Evaluation/Cost Analysis |
| EF | Exposure factor |
| EPA | United States Environmental Protection Agency |
| ERA | Ecological risk assessment |
| FP S&G | Forest Plan Standard and Guidelines |
| FR | Forest Road |
| GCL | Geosynthetic clay liner |
| HDPE | High density polyethylene |
| HHRA | Human health risk assessment |
| HI | Hazard index |
| LRMP | Land and Resource Management Plan |
| MDC | Maximum detected concentration |
| MDL | Method detection limit |
| MSE | Millennium Science and Engineering, Inc. |
| MTCA | Model Toxics Control Act |
| NCP | National Oil and Hazardous Substances Pollution Contingency Plan |
| NFS | Nation Forest System |
| NFSR | North Fork Skykomish River |
| NNP | Net neutralization potential |
| NPR | Neutralization potential ratio |
| NWFP | Northwest Forest Plan |
| O&M | Operations and maintenance |
| PRG | Preliminary Remediation Goal |
| RAO | Removal action objective |
| RfD | Reference dose |

**ACRONYMS AND ABBREVIATIONS (continued)**

| | |
|---|---|
| RME | Reasonable maximum exposure |
| RTE | Rare, threatened or endangered |
| SCS | Soil Conservation Service |
| SI | Site Inspection |
| SPLP | Synthetic precipitation leaching procedure |
| T&E | Threatened and endangered |
| TCLP | Toxicity characteristic leaching procedure |
| TSDF | Treatment, Storage or Disposal Facility |
| USCB | United States Census Bureau |
| USFS | United States Forest Service |
| WAC | Washington Administrative Code |
| WDOE | Washington Department of Ecology |
| WRCC | Western Regional Climate Center |
| XRF | X-Ray fluorescence |

## EXECUTIVE SUMMARY

Millennium Science and Engineering, Inc. (MSE) prepared this Engineering Evaluation/Cost Analysis (EE/CA) for a proposed Comprehensive Environmental Response, Compensation and Liability Act (CERCLA) removal action at the Sunset Mine in western Washington. This inactive copper mine is located on the Mt. Baker-Snoqualmie National Forest, about 5 miles northeast of the town of Index (Figure 1). The Site is in the Trout Creek drainage, which is a perennial tributary to the North Fork of the Skykomish River (NFSR). Sensitive ecosystems within 2 miles of the Site include jurisdictional wetlands on Trout Creek. In addition, numerous sensitive or threatened species have potential habitat in the vicinity of the Site.

The scope of removal actions evaluated in this EE/CA focus on:

(1) Eliminating direct contact with high concentrations of metals in the waste rock, soil, and sediment for all receptors;
(2) Reducing or eliminating the migration of contaminants to the environment;
(3) Improving surface water quality; and
(4) Mitigating physical hazards at the Site.

Cascade Earth Sciences (CES) completed a Site Inspection (SI) of the Sunset Mine in 2005. The Site consists of a concrete mill foundation, six waste rock piles, one open and two partially collapsed adits, two large stopes, and one open vertical ventilation raise. Public site use is moderate and physical hazards at the Site pose a significant public risk. The Site is adjacent to a large perennial stream (Trout Creek) and acid mine drainage (AMD) discharging from one of the adits contributes metals loading to the stream. MSE evaluated potential human health and ecological risks at the Site in 2006. The streamlined risk evaluation indicated significant potential human health and ecological risk at the Site from exposure to high concentrations of metals, particularly arsenic, in the mine waste, soil, sediment, and surface water. Maximum concentrations of arsenic in mine waste/soil (1,150 milligrams per kilogram [mg/kg]) exceeded human and ecological screening criteria by 57 and 115 times; sediment (7.8 mg/kg) by 5 and 1.3 times; and surface water (3.3 micrograms per liter (μg/L) by 183 and 1.1 times, respectively. Risk-based cleanup levels were developed in the risk evaluation using human health risk equations and site-specific exposure factors to back-calculate values based on acceptable risk levels.

Four removal action alternatives were evaluated for the Sunset Mine site:

- Alternative 1 – No Action
- Alternative 2 – Excavation and Off-site Disposal
- Alternative 3 – Excavation and On-site Disposal
- Alternative 4 – Treatment of Adit Discharges

The preferred alternative consists of a combination of Alternatives 3 and 4. Approximately 450 cubic yards (cy) of mine waste and contaminated soil would be excavated and disposed of in an on-site repository. The repository would be constructed over the concrete mill foundation and another 200 cy of relatively clean (below cleanup level) mine waste would be used to help completely cover the foundation. The repository would be capped with an engineered low permeability cover to minimize infiltration through the waste material and a diversion channel would be installed along the uphill side to intercept surface water run on. The excavated waste areas would be covered with topsoil, seeded, and hydromulched. Trees and brush cleared during the removal action would be used to generate slash and cover for seeded areas. Physical hazards would be addressed by installing bat culverts in two open adits, plugging the ventilation raise, and installing fences and warning signs around the stopes. Approximately 10 cy of miscellaneous debris and litter would be removed and hauled to a sanitary landfill for disposal. At Adit 1, a small channel would be excavated to convey adit discharge away from the waste rock. At

Adit 2 the existing channel would be reconstructed and a treatability pilot study using ViroMine™ media would be conducted to determine the viability and efficiency of treating the adit discharge with a flow through system.

The total estimated cost for the preferred alternative is **$244,986**.

## 1.0 INTRODUCTION

Millennium Science and Engineering, Inc. (MSE) was contracted by the U.S. Department of Agriculture Forest Service (USFS) to perform an Engineering Evaluation/Cost Analysis (EE/CA) for a contemplated non-time critical removal action at the Sunset Mine ("the Site") on the Mt. Baker-Snoqualmie National Forest.

- This EE/CA is being performed by the USFS under its cleanup authorities (42 USC 9604(a), 7 Code of Federal Regulations (CFR) 2.60(a)(39) and Federal Executive Order 12580). The purpose of this EE/CA is to select an alternative to minimize or eliminate any release or threat of release of a hazardous substance into the environment or impact on public health and welfare as outlined in 40 CFR 300.415(b)(2)(i)-(viii).
- This EE/CA was prepared utilizing the U.S. Environmental Protection Agency (EPA) *"Guidance on Conducting Non-Time-Critical Removal Actions under CERCLA"* and in accordance with provisions of National Oil and Hazardous Substances Pollution Contingency Plan (NCP), 40 CFR 300.415(b)(4)(i).
- The purpose of a removal action is to "abate, prevent, minimize, stabilize, mitigate or eliminate the release or the threat of a release" (40 CFR 300.415). The EE/CA for a removal action is intended to:
  - Satisfy environmental review requirements for removal actions;
  - Satisfy administrative record requirements for documentation of removal action selection; and
  - Provide a framework for evaluating and selecting alternative technologies.
- To meet those purposes, this EE/CA identifies objectives for the removal action and evaluates the effectiveness, implementability, and cost of various alternatives that may satisfy these objectives.
- The primary sources of data used to evaluate site conditions and to develop removal action alternatives, are the Streamlined Human Health and Ecological Risk Assessment report prepared by MSE (2006), the Site Inspection (SI) report prepared by Cascade Earth Sciences (CES 2005), and the Abbreviated Preliminary Assessment (APA) prepared by the USFS (2003).

## 2.0 SITE CHARACTERIZATION

A detailed site characterization is presented in the SI (CES 2005); please refer to that report for more information. A vicinity map is provided in Figure 1, and an overall site map is provided in Figure 2. Site features include:

- One open vertical ventilation raise;
- Two large stopes with vertical highwalls;
- One open adit (Adit 1) with discharge;
- Two partially collapsed adits (Adits 2 and 3), including one with discharge (Adit 2);
- Six waste rock piles; and
- Concrete mill foundation and miscellaneous debris.

### 2.1 Surrounding Land Use and Populations

Land uses in areas surrounding the Site include minerals prospecting, timber harvesting, firewood cutting, and recreational activities such as hiking, camping, fishing, and hunting. Site public use is moderate and the Site is promoted in *Discovering Washington's Historic Mines* (Northwest Underground Explorations 1997). The town of Index is about 5 miles from the Site and has approximately 165 inhabitants (U.S. Census Bureau [USCB] 2006). The closest residence to the Site is located about 2 miles downstream of

the Site along the North Fork of the Skykomish River (NFSR) below the confluence with Trout Creek (CES 2005).

## 2.2 Data Gap Investigation

MSE conducted a reconnaissance of the Site with the USFS Contracting Officer's Representative (COR) on June 13, 2007. Access to the Site is difficult and required a 4-wheel drive vehicle with high ground clearance. Selected photographs taken during the Site reconnaissance are provided in Appendix A. The waste rock and contaminated soil quantities are presented in bank cubic yards (cy). In general, the observed Site features were consistent with descriptions presented in the SI report and APA.

- The mill site is adjacent to the road and frequent public use is apparent from a large amount of scattered litter and debris over the area.
  - The volume of waste rock in the lower piles (WR-1, WR-2, and WR-3) appears to be generally consistent with the SI report.
  - With the exception of waste rock pile WR-2, it is difficult to discern between waste rock and natural soil based solely on visual observation. This is particularly true with waste rock pile WR-3, which is heavily vegetated and appears to be more characteristic of general overburden than waste rock or mine tailings.
  - However, the area between waste rock pile WR-1 and Trout Creek where discharge from Adit 2 flows down the road appears to contain waste rock eroding from WR-1.
    - Metals concentrations in the Adit 2 discharge increase significantly after flowing through this area indicating contact with mine waste or contaminated soil. Soil samples were not collected from this area during the SI.
    - The suspicious material covers approximately 1,200 square feet (sf) and is estimated to be about ~50 cy.
  - The flow from Adit 2 was estimated using a timed-volumetric method to be about 0.7 cubic feet per second (cfs), or 314 gallons per minute (gpm).
    - The discharge flows along Forest Road (FR) 6320 for about 470 feet and into Trout Creek directly across the road from the main site and mill area.
    - Trout Creek was not wadeable because of high flows but the rate of flow was estimated to be ~120 cfs.
- Access to the upper workings and waste rock piles is very steep and difficult along a narrow trail. Access by heavy equipment would require significant effort to construct a suitable road.
  - There is evidence of public foot traffic to the upper workings, including the two stopes and ventilation raise, which pose a significant physical hazard.
  - In general, the volume of waste rock in the upper piles (WR-4, WR-5 and WR-6) estimated in the SI appears to be conservative, particularly at WR-4, which appears to contain no more than 10 cy but was estimated in the SI to contain 60 cy.
  - The flow from Adit 1 was estimated to be less than 1 gpm and flows only a short distance (< 50 feet) from the adit before infiltrating into the ground.
- Climate data for the Site was obtained from the Western Regional Climate Center (WRCC 2007). The nearest climate station is located in Baring, Washington, about 6 miles south of the Site at an elevation of about 770 feet above mean sea level (AMSL).
  - Average annual precipitation in Baring is about 108 inches. Because the Sunset Mine is about 600 feet higher in elevation, annual precipitation at the Site is estimated to be approximately 120 inches.
  - The climate data is summarized in Table 1.

## 2.3 Source, Nature and Extent of Contamination

Based on information provided in the SI, contaminants of interest (COI) at the Site include: aluminum, arsenic, chromium, copper, lead, manganese, mercury, silver, and zinc. Analytical results of samples collected during the SI indicated concentrations of several COIs were above screening levels in the mine waste/soil, sediment, pore water, and surface water. The highest concentrations were found in the mine waste. The analytical results are summarized in Tables 2 through 6 and a summary of the estimated volumes of waste rock and contaminated soil is provided in Table 7.

The mill site, three waste rock piles and Adit 2 are located along the north side of the road and cover about 4 acres. A large perennial stream, Trout Creek, flows adjacent to the Site along the south side of the mill site. The other workings are located along a steep hillside above the mill site to the northeast, and are accessed via a narrow trial that ties into the road about 400 feet east of the mill. According to the SI, the entire Site encompasses about 960 acres (CES 2005).

Surface water features at the Site do not support a viable fish habitat; however, numerous sensitive fish species have been documented in the receiving stream (Trout Creek), which flows adjacent to the Site. Sensitive amphibian species, such as the Oregon tailed frog, may inhabit the Site in areas around the two adit discharges.

The source, nature and extent of contamination at the Site are briefly described in the following paragraphs by media type. Refer to the SI (CES 2005) for more detailed information and analytical results of samples collected during the SI.

**Surface Water**

- A total of 8 surface water samples were collected during the SI: 3 from Trout Creek, 2 from NFSR, 2 from the Adit 2 discharge, and 1 from the Adit 1 discharge.
- One background sample was taken from Trout Creek upstream of the Site, but downstream of other mining sites and associated disturbances. A second background sample was taken from NFSR upstream of the confluence with Trout Creek, but is not believed to be representative of background conditions at the Site because of the significant distance from the Site and presence of other potential sources of contamination upstream in the NFSR. Therefore, because only one sample was used to characterize background conditions at the Site, the reported background concentrations should be considered representative of "apparent background" conditions.
- Most COIs in the adit discharges, particularly from Adit 2, were elevated above apparent background levels. With the exception of copper, COI concentrations in the Adit 1 discharge were significantly less than in the Adit 2 discharge.
- The adit discharge samples had pH values ranging from 7.3 to 7.6 and hardness ranging from 29 to 61 milligram per liter (mg/L) calcium carbonate ($CaCO_3$). Surface water samples from Trout Creek had pH values ranging from 6.8 to 7.0, and a hardness value of 6 mg/L $CaCO_3$.
- Two COIs exceeded human health screening criteria: arsenic and iron. Arsenic exceeded human health screening criteria in all surface water samples and iron exceeded human health screening criteria in the Adit 2 discharge.
- Ten COIs exceeded ecological screening criteria: aluminum, arsenic, barium, beryllium, cadmium, chromium, copper, iron, lead, and selenium. The most notable exceedances were barium and copper in the Adit 2 discharge.
- The results for several COIs were reported as analyzed for but not detected; however, the method detection limits (MDL) for arsenic, beryllium, cadmium, chromium, and copper were below one or more screening criteria.
- Several COIs were also detected in the samples collected from Trout Creek: aluminum, arsenic, barium, copper iron, lead, barium, iron, and zinc. In general, COI concentrations in the

downstream sample were consistent with apparent background levels and significantly lower than in the adit discharge samples.

- Flow from Adit 2 is estimated to range from 150 to 450 gpm, which represents less than 1 percent of the total flow in Trout Creek.
- There is no noticeable difference in COI concentrations in samples from Trout Creek upstream and downstream of the Site.

**Sediment and Pore Water**

- Four pore water and four sediment samples were collected during the SI. The samples were co-located with the three surface water samples collected from Trout Creek, and the surface water sample collected from NFSR upstream of the confluence with Trout Creek.
- Similar to surface water, only single sediment and pore water samples were used to characterize background conditions at the Site; therefore, the reported background concentrations should be considered representative of "apparent background" conditions.
- One COI in sediment exceeded human health screening criteria: arsenic. All samples exceeded the EPA Region 9 Industrial Soil Preliminary Remediation Goal (PRG) for arsenic (1.6 milligram per kilogram [mg/kg]).
    - Three COIs exceeded one or more ecological screening criteria in all samples: arsenic, copper, and nickel. The most notable exceedance is copper.
    - In general, COI concentrations in the downstream sediment sample were consistent with, or only slightly above, apparent background levels
- Five COIs in pore water exceeded ecological screening criteria: arsenic, beryllium, cadmium, chromium, and copper.
    - pH values in samples from Trout Creek ranged from 7.1 to 9.7 with a hardness value of 5 mg/L CaCO3.
    - In general, most COI concentrations were consistent with apparent background levels.

**Groundwater**

- Groundwater conditions at the Site are not well documented and no groundwater samples were collected during the SI.
- Ten water wells are reportedly located within a 4-mile radius of the Site. However, according to the SI report, "impacts from the Site on these wells are extremely unlikely" (CES 2005). Nine of the ten wells obtain water from alluvial deposits in the NFSR drainage and the tenth well is located over 2 miles from the Site.
- Groundwater pathway is considered incomplete.
- Groundwater will be addressed indirectly in the consideration of adit discharge and contaminated soils.

**Air**

- Air quality at the Site has not been characterized and no air samples were collected during the SI. The most likely source of air contamination at the Site is windblown dust particulates from the waste rock piles.
- COI concentrations in the waste rock were all below EPA's soil screening level for inhalation of particulates (EPA 2004a).
- Air pathway is considered complete but insignificant.

**Mine Waste and Soil**

- Six mine waste piles were identified during the SI. The mine waste appears to consist primarily of waste rock excavated during underground operations.

- According to the SI, the total estimated volume of waste rock at the Site is about 1,970 cy (CES 2005).
- Three background soil samples were collected during the SI. This is a relatively small data set for adequately characterizing background conditions at the Site; therefore, the reported background concentrations should be considered representative of "apparent background" conditions. The results indicated:
  - pH values ranged from 5.0 to 5.5,
  - One COI exceeded human health screening criteria: arsenic. All three background samples exceeded the arsenic criteria.
  - Twelve COIs exceeded one or more ecological screening criteria: aluminum, arsenic, barium, cadmium, chromium, copper, mercury, lead, antimony, selenium, vanadium, and zinc. The most notable exceedances were aluminum, copper, vanadium, and zinc.
- A total of 17 waste rock and soil samples were collected during the SI. The results indicated:
  - pH values ranged from 2.9 to 7.4,
  - Six COIs exceeded human health screening criteria: arsenic, cadmium, chromium, copper, iron, and mercury. All but one sample exceeded the human health arsenic criterion.
  - Sixteen COIs exceeded one or more ecological screening criteria: silver, aluminum, arsenic, barium, cadmium, cobalt, chromium, copper, mercury, manganese, lead, antimony, selenium, thallium, vanadium, and zinc. The most notable exceedances were silver, arsenic, copper, mercury, lead, selenium, vanadium, and zinc.
- No waste rock or soil samples were collected from the area between waste rock pile WR-1 and Trout Creek. COI concentrations in the discharge from Adit 2 increase significantly after flowing through this area indicating the likely presence of mine waste material.
- Acid-base accounting (ABA), toxicity characterization leaching procedure (TCLP), and synthetic precipitation leaching procedure (SPLP) tests were conducted on five mine waste samples from four areas: waste rock piles WR-1, WR-2, WR-3, and soils around the mill foundation. The results indicated the following:
  - Acid generating potential (AGP) values ranged from 11 to 93 tons of calcium carbonate per kiloton of waste (t $CaCO_3$/Kt), acid neutralization potential (ANP) values ranging from <5 to 26.
  - Neutralization potential ratios (NPR) ranged from 0.13 to 1.07, and net neutralization potential (NNP) values ranged from –33 to 1.
  - Waste rock piles WR-1, WR-2, and WR-6, and soils around the mill foundation are likely to generate acid.
  - Waste rock pile WR-3 is unlikely to generate acid.
  - None of the samples had TCLP or SPLP results exceeding RCRA TCLP disposal limits.

**<u>Mill Foundation and Debris</u>**

- There are no structures on site and only the concrete foundation of the mill remains.
- Miscellaneous litter and debris on site, particularly around the mill site.

### 2.4 Risk Assessment Conclusion

MSE completed a streamlined human health and ecological risk assessment of the Sunset Mine to evaluate risks associated with exposure to mining-related contaminants at the Site (MSE 2006). Analytical data and other information presented in the SI (CES 2005) were used in the risk calculations. Results of the streamlined risk assessment indicated significant potential risks to both human and ecological receptors at the Site.

### 2.4.1 Human Health Risk Assessment

The streamlined human health risk assessment (HHRA) indicated non-carcinogenic hazard and carcinogenic risk from exposure to metals, particularly arsenic, in mine waste, sediment, and surface water at the Site.

- Non-carcinogenic Hazard Indices (HI) ranged from 0.04 to 1 for the adult recreationalist, and from 0.4 to 23 for the child recreationalist. An HI greater than 1 indicates a potential health risk because the estimated contaminant intake exceeds the reference dose (RfD). The RfD is a contaminant-specific value established by the EPA that represents the exposure level above which represents potential adverse health effects.
- Carcinogenic risks ranged from 7.E-07 to 4.E-05 for the adult recreationalist, and from 4.E-06 to 2.E-04 for the child recreationalist. Under CERCLA, EPA generally considers carcinogenic risks to an individual ranging from 1.E-06 to 1.E-04 to be acceptable depending on specific site and exposure characteristics (EPA 1991).
- Eight human health contaminants of potential concern (COPC) were identified: antimony, arsenic, cadmium, chromium, copper, iron, lead, and mercury.
- The most significant exposure pathway is ingestion of and dermal contact with arsenic in the mine waste. Ingestion of surface water also poses a slight human health risk.
- Inhalation of particulates from the mine waste, and dermal contact with sediment and surface water contribute minimal risk and are insignificant pathways.

### 2.4.2 Ecological Risk Assessment

Results of the streamlined ecological risk assessment (ERA) indicated significant potential risk to ecological receptors, particularly rare, threatened, or endangered (RTE) ecological species that have potential habitat in vicinity of the Site. However, no sensitive or RTE species have been observed on site.

- Several contaminants of potential ecological concern (CPEC) were identified at the Site, most notably aluminum, antimony, copper, iron, mercury, and selenium.
- The highest risk ratios to terrestrial receptors were from exposure to the mine waste. There is also risk to aquatic receptors from exposure to CPECs in surface water and sediment, particularly from copper.
- With the possible exception of amphibian species, the risks appear to be limited to individual receptors rather than whole populations. This is because while individual receptors may be exposed to metals in mine wastes at the Site, their populations are unlikely to be significantly impacted because it is improbable that entire populations of receptors reside strictly within the Site boundaries.
- No reptiles or amphibians were encountered at the Site during the SI or Site reconnaissance. However, according to the SI, several sensitive species may inhabit the Site, including the spotted frog, which is a state-endangered species. Individual amphibian receptors at the Site may be at risk because they have much smaller home ranges and may inhabit areas around the adit discharges. This is critical because threatened and endangered (T&E) species are to be protected to the individual level. A biological survey should be conducted to determine whether those species are present at the Site in areas around the adit discharges, and a USFS Biologist consulted to determine whether protective measures need to be taken if these species are present on site.

### 2.4.3 Physical Hazards

There are several significant physical hazards at the Site, including:

- One open and two partially collapsed adits;
- Two large caved stopes with vertical high walls;
- One open vertical ventilation raise; and
- Miscellaneous debris.

**Adits**

- Adit 2 is located near the mill site (Figure 2).
  - The partially collapsed opening is very small (approximately 2-feet wide by 1.5-feet high) and located in a hole with overhanging rock above.
  - Physical access would be very difficult and there is a high hazard of falling rock from the overhang above the adit.
  - Water discharges from the adit at a rate of 300 to 500 gpm.
- Adit 1 is located upslope of waste rock pile WR-6.
  - The opening is approximately 4-feet wide by 4.5-feet high and easily accessible.
  - Water discharges from the adit at < 1 gpm and flows for about 50 feet before infiltrating into the ground.
- Adit 3 is located upslope of waste rock pile WR-4.
  - The partially collapsed opening is very small (approximately 2-feet high by 2-feet wide) and well hidden by downfall and vegetation.
  - Physical access is very difficult.
  - Field staff observed no discharge or evidence of historic discharge from this adit.

**Stopes**

- The east stope is located upslope of waste rock pile WR-5 along a very steep slope and is approximately 300 to 400 feet upslope of waste rock pile WR-6.
  - The stope consists of a large subsidence feature (about 300 feet in perimeter) with vertical high walls and an opening about 25-feet wide by 20-feet high that extends an unknown distance underground.
  - Physical access is relatively easy and there is evidence of foot traffic into the stope.
- The west stope is located approximately 500 to 600 feet west of the east stope, and about 200 feet northwest of waste rock pile WR-4.
  - The stope consists of a large subsidence feature (about 240 feet in perimeter) with vertical high walls and an opening about 40-feet wide by 60-feet high that extends an unknown distance underground.
  - Physical access is difficult but there is evidence of foot traffic into the stope.
- Both stopes pose significant physical hazards to the public.

**Ventilation Raise**

- The ventilation raise is located about 75 feet east of the west stope.
  - The raise consists of a 10-foot by 6-foot rectangular hole that drops vertically for an unknown distance.
  - The raise poses a significant physical hazard to the public.

**Miscellaneous Debris**

- There is miscellaneous debris scattered at each mine working area, particularly around the mill site.

- The debris consists primarily of scattered wooden timbers, mining debris, cans, bottles, and other general litter.
- The concrete mill foundation is terraced into the hillside and covers an area of about 6,500 sf.

## 3.0 SITE CLEANUP CRITERIA

There are two general types of cleanup criteria:

(1) Applicable or Relevant and Appropriate Requirements (ARAR), and
(2) Risk-based cleanup criteria developed from human health risk equations using acceptable risk levels and site-specific factors.

ARARs are "applicable" or "relevant and appropriate" federal and state environmental requirements. Applicable requirements include cleanup standards and other substantive requirements, criteria, or limitations promulgated under federal or state laws that apply to hazardous substances and removal actions at the Site. Relevant and appropriate requirements are not applicable to the Site but may be suitable for use because they address issues or problems sufficiently similar to those at present at the Site. In addition to ARARs, federal and state environmental and public health guidance and proposed standards that are not legally binding but may prove useful are "to be considered" standards.

Risk-based cleanup criteria are site-specific levels determined to be protective of human health based on acceptable risk levels, and site-specific contaminant concentrations, land uses, and exposure pathways. Risk-based cleanup levels were developed for soil and sediment at the Sunset Mine as part of the streamlined HHRA (MSE 2006).

The ARARs and proposed cleanup criteria for each media at the Site are discussed below and summarized in Tables 8, 9 and 10.

### 3.1 Applicable or Relevant and Appropriate Requirements

ARARs are "applicable" or "relevant and appropriate" federal and state environmental requirements used to:

(1) Evaluate the extent of site cleanup needed;
(2) Scope and develop removal action alternatives; and
(3) Guide the implementation and operation of the preferred alternative.

The NCP (40 CFR 300.415(j)) establishes that a removal action shall "to the extent practical, considering the exigencies of the situation, attain ARARs under federal environmental or state environmental facility siting laws."

To determine whether compliance with ARARs is practicable, two factors are specified in 40 CFR 415(j):

- Urgency, and
- Scope of the removal action.
  - The scope of the removal action is often directed at minimizing and mitigating potential hazard rather than totally eliminating the hazard; even though a particular standard may be an ARAR for a particular medium, it may be outside the scope of the immediate problem the removal action is addressing.

A comprehensive list of ARARs generated and evaluated for the Site is presented in Appendix B. The ARARs were used to determine the design specifications and performance standards for the project. They

are grouped as federal or State of Washington ARARs, and are identified by a statutory or regulatory citation, followed by a brief explanation of the ARAR, and whether the ARAR is applicable, or relevant and appropriate.

- Administrative requirements are not ARARs and thus do not apply to actions conducted entirely on-site. Administrative requirements are those that involve consultation, issuance of permits, documentation, reporting, record keeping, and enforcement.
- The CERCLA program has its own set of administrative procedures, which assure proper implementation of CERCLA. The preamble to the final NCP states that the application of additional or conflicting administrative requirements could result in delay or confusion.
- Provisions of statutes or regulations that contain general goals that merely express legislative intent about desired outcomes or conditions, but are non-binding, are not ARARs. In accordance with Section 121(e) of CERCLA, no permits are required for the removal action.

Key ARARs for a removal action at the Sunset Mine include:

- **Water, Soil, and Sediment Quality Standards:**
  - Washington State Water Quality Standards for Surface Water (WAC Chapter 173-201A)
  - Washington State Drinking Water Standards (WAC Chapter 246-290)
  - Federal Water Quality Criteria for Surface Water (40 CFR 131.26)
  - 2007 Aquatic Life Ambient Freshwater Quality for Copper[1] (40 CFR 131.26)
  - National Toxics Rule Water Quality Standards (40 CFR 131.26)
  - Washington Model Toxics Control Act (MTCA) Industrial Soil Cleanup Levels – Human Receptors (WAC Chapter 173-340)
  - EPA PRGs for Industrial Soil (EPA 2004)
  - Washington Freshwater Sediment Management Standards (WAC Chapter 173-204)
- **Solid/Dangerous Waste (Solids) Disposal Requirements:**
  - Washington MTCA Terrestrial Ecologic Evaluation (TEE) Criteria (WAC Chapter 173-340)
  - Washington State Hazardous Waste Management Act and Dangerous Waste Regulations (WAC Chapter 173-303)
  - RCRA Hazardous Waste Management Subtitle C (40 CFR Part 261 to 279)
- **Forest Plan Standard and Guidelines (FP S&Gs):**
  - Mt. Baker Snoqualmie National Forest Land and Resource Management Plan as amended by the Pacific Northwest Forest Plan (i.e. PacFish Riparian Standards and Guidelines)

### 3.1.1 Water, Soil, and Sediment Quality Standards

Because risk-based cleanup criteria were developed for soil and sediment at the Site, ARAR-based cleanup criteria for the Site are limited to surface water. Groundwater is not used for drinking water at the Site and future use as a drinking source is not anticipated; therefore, no cleanup criteria were identified for groundwater.

The ARARs and proposed site cleanup criteria for surface water, summarized in Table 8, and are based on Washington state and federal standards for the protection of aquatic life and human health. The values

[1] The federal Aquatic Life Ambient Freshwater Quality Criterion for copper was revised in 2007 and is potentially relevant and applicable to the Site (EPA 2007). The 2007 copper criterion uses the Biotic Ligand Model to determine acute and chronic concentrations that are protective of aquatic organisms based on ambient conditions and site-specific factors. However, because there was insufficient data to calculate the 2007 criterion for the Site, the 2006 criterion was used.

for hardness dependent metals were adjusted based on an apparent background value of 6 in a single background sample collected from Trout Creek upstream of the Site. Only a few COIs in surface water at the Site exceeded the proposed cleanup criteria:

- Both adit discharges exceeded the ecological cleanup levels for barium (4.0 micrograms per liter [μg/L]) and copper (1.0 μg/L).
- The Adit 2 discharge sample collected near Trout Creek exceeded the human health cleanup level for iron (300 μg/L) and ecological cleanup levels for aluminum (87 μg/L) and lead (0.11 μg/L).
- The single background surface water sample exceeded the ecological cleanup level for lead (0.11 μg/L); therefore, the proposed lead cleanup level is the apparent background concentration (0.4 μg/L). Future sampling will be required to confirm background concentrations.
- None of the surface water samples collected from Trout Creek or the NFSR exceed the proposed ARAR-based cleanup criteria.

### 3.1.2 Solid/Dangerous Waste (Solids) Disposal Requirements

These ARARs set minimum functional performance standards for proper handling and disposal of solid waste; describe responsibilities of various entities; and stipulate requirements for solid waste handling facility location, design, construction, operation, and closure. All substantive requirements for closure and post-closure of limited purpose landfills (WAC 173-350-400) are potential ARARs (WAC 173-340-710[7][c]). The waste rock/soils at the Site are landfills that contain solid waste and are releasing hazardous substances above both state and federal cleanup standards.

### 3.1.3 Forest Plan Standard and Guidelines (FP S&Gs)

Portions of the Land and Resource Management Plan (LRMP) for Mt. Baker Snoqualmie National Forest (USFS 1990), as amended by Pacific Northwest Forest Plan (NWFP 1994) are potentially applicable or relevant and appropriate for assessing Site remedial alternatives. The LRMP and NWFP include standards and guidelines that are potentially relevant and appropriate to actions at the Site, including activities within, or that affect Riparian Management Areas along Trout Creek. These standards and guidelines include RF-2 through RF-7, which control the design, construction, and use of temporary and permanent roads and other modifications within Riparian Reserves; and MM-3, which controls solid waste and mine waste facilities within Riparian Reserves. Particular aspects of MM-3 that are potentially relevant and appropriate to closure of the waste rock piles at the Site include requirements for: (a) analysis based on best conventional methods; (b) designing waste facilities using best conventional techniques to ensure mass stability and prevent the release of acid or toxic materials; and (c) reclamation and monitoring waste facilities to ensure chemical and physical stability, and to meet ACS objectives.

## 3.2 Risk–based Cleanup Concentrations

Risk-based cleanup criteria were developed for soil and sediment at the Site as part of the streamlined HHRA (MSE 2006). Cleanup criteria were developed for each COPC using the human health risk equations for the most sensitive receptor (child recreationalist) under the reasonable maximum exposure (RME) scenario and site-specific exposure factors (EF). EFs are variables that determine the chronic daily intake rate, and include receptor body weight, exposure frequency and duration, averaging time, intake rates, chemical bioavailability, and other factors.

Cleanup levels for soil and sediment were established using an acceptable non-carcinogenic HI of 1.E+00 and a carcinogenic risk of 1.E-05 for the most sensitive receptor (child recreationalist) under the RME scenario (EPA 1991)[2]. The ARARs and the risk-based cleanup levels for soil and sediment are summarized in Tables 9 and 10. No COIs in sediment exceeded the risk-based cleanup criteria. Areas exceeding the soil risk-based cleanup levels are presented in Table 11 and summarized below.

- Arsenic concentrations in soil samples from five areas exceeded the cleanup level of 41 mg/kg:
  - Soil south of the mill foundation (9 to 60 mg/kg, average = 40 mg/kg)
  - Waste rock pile WR-1 (49 to 60 mg/kg, average = 53 mg/kg)
  - Waste rock pile WR-2 (110 to 1,150 mg/kg, average = 513 mg/kg)
  - Waste rock pile WR-5 (133 mg/kg)
  - Waste rock pile WR-6 (27 to 63 mg/kg, average = 40 mg/kg)
- Antimony and copper concentrations exceeded the cleanup levels of 252 mg/kg and 36,573 mg/kg, respectively, in only one soil sample from waste rock pile WR-5 (antimony = 400 mg/kg and copper = 883,000 mg/kg).
- The above risk-based criteria for soils and sediment are equal to or greater than ARAR-based criteria for all COPCs.

Cleanup criteria for lead in soil and sediment could not be calculated using standard risk assessment algorithms because toxicological reference values (i.e. reference doses and slope factors) have not been established for lead. However, according to the risk assessment, there does not appear to be a human health risk from exposure to lead at the Site. The maximum detected lead concentration in soil at the Site (788 mg/kg) is well below Washington Department of Ecology's (WDOE) Model Toxics Control Act (MTCA) Method A Industrial Soil Cleanup Level of 1,000 mg/kg (2001), and EPA Region 9's Industrial Soil PRG of 800 mg/kg. In addition, the maximum detected lead concentration (8 mg/kg) is well below Washington's recommended freshwater sediment quality standard of 335 mg/kg (WDOE 2004).

## 4.0 IDENTIFICATION OF REMOVAL ACTION OBJECTIVES

The general goal of a removal action is to protect human health and the environment by preventing or minimizing the potential release of a hazardous substance and reducing the potential for direct contact and transport of contaminants to the environment. Based on the human health and ecological risks identified at the Sunset Mine, the following non-time critical removal action objectives (RAO) were developed for the Site:

- Reduce human and wildlife exposure surface exposure to metals in the waste rock piles;
- Improve surface water quality and decrease metals loading to Trout Creek;
- Improve public safety by addressing physical hazards at the Site; and
- Attain ARARs to the extent practical considering the urgency of the situation and scope of the removal.

The following sections discuss the justification for a removal action at the Site, scope of the removal action, and the proposed removal action schedule.

[2]Washington ARARs specify 1.E-06 excess cancer risk for individual carcinogens and 1.E-05 total risk for multiple carcinogens.

## 4.1 Removal Action Justification

40 CFR 300.415(b) list eight factors to be considered in determining whether a removal action is appropriate. The factors relevant at this Site, and the conditions establishing the presence of those factors, are summarized below:

| Factor | Site Condition | Justification |
|---|---|---|
| (1) Actual or potential exposure to nearby human populations, animals, or the food chain from hazardous substances, pollutants, or contaminants | Public access to soil, waste rock, sediment, and surface water with high concentrations of metals | **Yes** |
| (2) Actual or potential contamination of drinking water supplies or sensitive ecosystems | No public water supply but one adit that discharges to Trout Creek | **Yes** |
| (3) Hazardous substances, pollutants, or contaminants in drums, barrels, tanks, or other bulk storage containers that may pose a threat of release | No drums, barrels, tanks, or bulk storage containers on site | No |
| (4) High levels of hazardous substances, pollutants, or contaminants in soils at or near the surface that may migrate | High concentrations of metals in soil and waste rock subject to erosion and migration | **Yes** |
| (5) Weather conditions that may cause hazardous substances, pollutants, or contaminants to migrate or be released | Waste rock near a stream and subject to erosion during rain events and snowmelt | **Yes** |
| (6) Threat of fire or explosion | No flammable materials on site | No |
| (7) The availability of other appropriate federal or state response mechanisms to respond to the release | Site is on USFS land | **Yes** |
| (8) Other situations or factors that may pose threats to public health or the environment | Physical hazards such as open adits, stopes, and a vertical ventilation raise | **Yes** |

- The streamlined risk assessment indicated potential risk to human health and the environment from exposure to metals in the mine waste, surface water, and sediment.
- The maximum detected concentrations (MDC) of three metals (arsenic, antimony, and copper) in the mine waste exceed the human health risk-based cleanup levels.
- The MDC of four metals (arsenic, cadmium, chromium and mercury) in the mine waste exceed WDOE's MTCA Method A Industrial Soil cleanup levels.
- The MDCs of 14 metals (silver, aluminum, barium, cobalt, chromium, copper, mercury, manganese, lead, antimony, selenium, thallium, vanadium, and zinc) in the mine waste exceed WDOE's MTCA Ecological Indicator Soil Concentrations for Protection of Terrestrial Plants and Animals. Cadmium was reported as not detected in several mine waste samples but the MDL was above screening criteria.
- Metals concentrations in surface water discharging from the adits exceed human health and ecological screening criteria, particularly in a sample collected from the Adit 2 discharge just before it flows into Trout Creek. The discharge from Adit 2 contributes metals loading to Trout Creek.
- The mill site and waste rock piles are adjacent to Trout Creek and there is evidence of erosion and transport of fine-grained materials from the waste rock into the stream. However, based on site observations and a cursory hydrologic analysis, the piles appear to be above the 100-year floodplain.
- Public site use is moderate and there are several significant physical hazards at the Site, including open and partially collapsed adits, an open vertical ventilation raise, two collapsed stopes with large openings and high vertical faces, and miscellaneous debris.

## 4.2 Scope of Removal Action

The scope of removal actions evaluated in this EE/CA focus on:

(1) Eliminating direct contact with high concentrations of COIs in the waste rock and soil;
(2) Reducing or eliminating the migration of contaminants to the environment;
(3) Improving surface water quality; and
(4) Mitigating physical hazards at the Site.

The primary sources of contaminants at the Site are waste rock piles WR-1 and WR-2, contaminated soil around the mill foundation, and adit discharges. The waste rock piles WR-3, WR-4 and WR-6, and fine-grained materials (i.e., sediment) that may have been deposited in, or migrated to, Trout Creek are considered secondary contaminant sources. Waste rock pile WR-5 requires additional characterization to determine whether it constitutes a primary or secondary contaminant source. Addressing environmental impacts associated with the primary contaminant sources at the Site presumes that some reduction in COI concentrations in surface water, groundwater, and sediment will occur as a result of removing or controlling the primary contaminant source. However, because there are other mining disturbances in the area, including several mining disturbances upstream of the Site, surface water and sediment in Trout Creek may be subject to continued degradation from sources outside the scope of this removal action. If future water quality monitoring indicates that a significant risk from surface water or sediment in Trout Creek remains, additional removal actions may be necessary. Except for adit discharge, investigation or treatment of groundwater is beyond the scope of the removal.

Post-removal action monitoring will be required to evaluate the removal action effectiveness and compliance with the ARARs. The monitoring should include confirmation soil sampling during mine waste and contaminated soil removal, and periodic surface water sampling. The number and type of samples, analytical suite, MDLs, and sampling frequency should be determined in coordination with the applicable Washington State agencies.

## 4.3 Removal Action Schedule

The removal action is tentatively scheduled for 2009; however, the date is dependent on federal funding and may be subject to change by the USFS.

# 5.0 IDENTIFICATION AND ANALYSIS OF REMOVAL ACTION ALTERNATIVES

This section describes the selection of a removal action using a three–step process:

(1) Identify potential removal action options and alternatives applicable to the Site and screen to eliminate ineffective or unfeasible alternatives;
(2) Analyze selected removal action alternatives based on effectiveness, implementability, and cost; and
(3) Identify existing data gaps that are relevant to the selected alternatives.

Removal action technologies applicable to the Site were identified based on a review of technical literature and previous experience at similar mine sites. The technologies, described in Table 12, were screened to eliminate inappropriate, ineffective, infeasible or cost prohibitive methods. In addition, technologies with unproven or uncertain performance were eliminated if they had relatively high implementation costs and/or would likely require implementation with other costly mitigation components. Technologies with uncertain or unproven performance were retained if they represented potentially cost effective mitigation and the performance can be investigated through pilot or bench scale testing. For this EE/CA, a potentially cost effective technology is one that could provide protection

comparable to other standard methods utilized in mine reclamation, at a cost similar to or less than the costs of those methods. All components not screened out were retained as potential technologies that could be implemented at the Site.

The technologies were assessed relative to others in the same sub-category based on effectiveness, implementability, and cost. This allowed each technology to be assigned a relative ranking of high, medium, or low for each evaluation criterion. Table 12 summarizes the results of the removal action technology screening process, including the technologies retained for incorporation into removal action alternatives.

## 5.1 Identification and Screening of Removal Action Options and Alternatives

Conceptual removal alternative designs (Figures 3 through 7) were developed from the technologies that passed the screening process. Key design features are estimates only and provided for comparison purposes. The material quantities and flow rates provided in this section are estimates only and should be more accurately quantified for final design and removal action. Bulk excavated waste rock and contaminated soil quantities are presented in bank cy; all other bulk material quantities are presented in loose cy. The referenced figures are conceptual only.

Based on results of the removal action technology screening process, four removal action alternatives were selected for detailed analysis. The alternatives include:

- **ALTERNATIVE 1 – NO ACTION**
- **ALTERNATIVE 2 – EXCAVATION AND OFF-SITE DISPOSAL**
- **ALTERNATIVE 3 – EXCAVATION AND ON-SITE DISPOSAL**
- **ALTERNATIVE 4 – TREATMENT OF ADIT DISCHARGES**

Each of the alternatives is discussed below.

**Removal Action Elements Common to all Action Alternatives**

Certain work elements should be employed and implemented regardless of the action alternative selected. These elements include: (1) improving site access, (2) addressing physical hazards at the Site, and (3) best management practices (BMP) to be implemented during on-site removal actions. A temporary staging area would be established at the intersection of County Route 63 and FR 6320. Site access via FR 6320 is narrow and currently requires a high-clearance, 4-wheel drive vehicle. Some improvement will be needed to accommodate heavy equipment. Physical hazards may be mitigated through institutional controls such as fencing, gating and/or signs which limit public access, or by removal of the hazard, e.g. plugging with foam or filling the openings. While eliminating the hazard would be preferable, it would not be economical at this Site because of the large volume of material required to fill the holes, and very difficult access. The two stopes were estimated to require a combined volume of more than 1,000 cy to fill, which would require constructing an access road to accommodate heavy equipment. The stopes could be filled with waste rock or imported material from an off-site source; however, the stopes may be subject to future subsidence or collapse. Also, according to the SI (CES 2005), a sensitive bat species may inhabit the underground mine workings and plugging or filling the stopes and adits would prevent bat passage and eliminate potential habitat. Therefore, the preferred mitigation for physical hazards at the Site is focused on institutional controls rather than plugging or filling. The BMPs and proposed actions for each hazard are discussed below:

- **Site Access.** Site access will be minimally improved by removing obstructions and placing road base material (total of ~20 cy of 2-inch minus material) in selected areas to minimize hazards along 0.5 miles of FR 6320 to the Site.

- **Physical Hazards.** Physical hazards at the Site represent the most significant potential hazard to the public and should be addressed regardless of the removal action alternative selected. Each hazard is described below:
  - **Open Adit 1.** Install a 36-inch diameter by 10-foot long bat culvert, shown in Figure 7, in Adit 1 to prevent public access while maintaining potential bat habitat. Place the culvert about 6 feet into the adit and place rocks around the exposed end of the culvert to fill the opening as shown in Figure 7.
  - **Collapsed Adit 2.** Physical access into the adit is currently blocked by large rocks that have fallen in and around the opening; therefore, the physical hazard is minimal and no actions are proposed.
  - **Collapsed Adit 3.** While physical access is possible, the adit opening is very small (about 2 feet wide by 2 feet high) and well hidden by rocks and downfall. Install a 36-inch diameter by 10-foot long bat culvert, shown in Figure 7, in Adit 3 to prevent public access while maintaining potential bat habitat. Clear the rocks and downfall from in front of the opening to accommodate installation. Place the culvert about 6 feet into the adit and place rocks around the exposed end of the culvert to fill the opening as shown in Figure 7.
  - **Open Ventilation Raise.** The opening would be plugged with expanding foam and covered with soil and rock. Prior to plugging, a USFS biologist with bat habitat expertise should be consulted to ensure that plugging of the ventilation raise will not adversely affect bat habitat within the underground workings.
  - **East Stope.** Install approximately 400 feet of 4-strand barbed wired fence around the perimeter of the stope allowing adequate buffer to accommodate future subsidence or collapse and post one or more signs warning of the physical dangers.
  - **West Stope.** Install approximately 300 feet of 4-strand barbed wired fence around the perimeter of the stope allowing adequate buffer to accommodate future subsidence or collapse and post one or more signs warning of the physical dangers.
  - **Miscellaneous debris.** Remove miscellaneous debris and litter from the mill site and dispose in an on-site repository, or transport off site for disposal depending on the final removal action alternative selected.
- **Best Management Practices.** During removal activities, BMPs will be employed to contain run-off, minimize erosion, and prevent sedimentation of Trout Creek during the removal action. Specific BMPs will depend on the removal action selected and may include, but not be limited to: silt fencing, straw bales, check dams, temporary surface water diversions, sediment retention, and dust suppression.

**ALTERNATIVE 1 – No Action**

This alternative consists of no further action and leaving the Site as is:

- Waste rock would remain in its current location;
- Site safety hazards (i.e. open adits, ventilation raise and stopes etc.) would remain as is; and
- Adit discharges would remain untreated.

**ALTERNATIVE 2 – Excavation and Off-site Disposal**

This alternative involves excavating soil and waste rock with COI concentrations above the cleanup criteria, and transporting to an off-site facility for disposal. Disposal options depend on whether the waste rock and contaminated soil are considered a hazardous waste under Washington Dangerous Waste Rules (WAC Chapter 173-303). The waste rock is not a listed discarded chemical product or dangerous waste source, nor does it exhibit the characteristics of a hazardous waste. The results of all waste rock leachate samples analyzed during the SI using SPLP and TCLP were below RCRA TCLP disposal limits. Therefore, the mine waste is not considered to be a Washington Dangerous Waste or a RCRA Hazardous Waste. The mine waste may be considered a special waste though because it poses a relatively low

hazard to human health and the environment. The Roosevelt Regional private landfill in Klickitat County was contacted and confirmed that they will accept mine waste rock that passes TCLP disposal limits (Dillishaw 2008). Rabanco provides 25-ton capacity bins that they pick up and haul to a rail station for transport to the landfill. The rail station is located about 60 miles from the Site.

This alternative also includes demolition and off-site disposal of the concrete mill foundation. Two waste excavation options were evaluated for this alternative based on using (1) maximum detected COI concentrations (i.e., MDC), or (2) average COI concentrations to determine which areas exceed cleanup levels:

- **Excavation Option 1 – Removal Based on MDCs:**
  Under this option, the MDC of COIs in each area would be compared to cleanup criteria to determine which areas would be excavated and removed. Based on this approach, soil around the mill foundation (S-1 & S3) and waste rock piles WR-1, WR-2, WR-5, and WR-6 would be removed.
  - Construct 3,500 feet of temporary road to provide access to waste rock piles WR-5 and WR-6.
    - Construct a 15-foot wide temporary access road at a maximum slope of 10 percent along the hillside, which has a slope of up to 70 percent.
    - Excavate ~9,100 cy of material based on a cut-and-fill construction.
    - Compact and place ~500 cy of coarse road base.
    - Install temporary erosion control BMPs.
  - Excavating waste rock and soil with MDCs of antimony, arsenic, or copper above the risk-based cleanup criteria of 252 mg/kg, 41 mg/kg, and 36,573 mg/kg, respectively.
    - 800 cy from upper mine workings: waste rock piles WR-5 and WR-6.
    - 400 cy from mill site (soil around the mill foundation at S1 & S-3), and waste rock piles WR-1 and WR-2.
    - ~50 cy of suspected contaminated soil south of waste rock pile WR-1 along the discharge from Adit 2.
  - Demolishing the concrete mill foundation using power equipment.
    - Estimated to be ~300 cy of reinforced concrete and contaminated soil.
  - Loading the waste rock, contaminated soil and concrete (1,550 cy total) in 12-cy dump trucks and transporting to the temporary staging area for transfer to the 25-ton Rabanco bins.
  - Transporting the bins to the rail station (60 miles) for transfer to the Roosevelt Regional landfill for disposal.
  - Use a Niton X-ray fluorescence (XRF) to assist in delineating the extent of excavation and to field check removal efforts. Collect a minimum of one composite confirmation sample from each area for verification of contaminant removal.
  - Grade the mill site and areas (~0.7 acre) from which waste rock and soil has been excavated to blend with the surrounding topography and promote drainage. Apply 6 to 12 inches of growth media (900 cy), applying fertilizer, seeding with a USFS-approved seed mix, hydromulching, and planting tree seedlings at the mill site.
  - Reclaim 3,500 feet of temporary access road by ripping compacted surfaces, grading to blend with the natural hillside to the extent possible, seeding ~2 acres with a USFS-approved seed mix and hydromulching.
- **Excavation Option 2 – Removal Based on Average Concentrations:**
  Under this option, the average concentration of COIs in each area would be compared to cleanup criteria to determine which areas needed to be excavated and removed. Based on this approach, soil around the mill foundation (S-1 & S-3) and waste rock piles WR-1 and WR-2 would be removed. While the single sample from waste rock pile WR-5 also exceeds cleanup criteria, this option assumes that the sample is an anomaly (88.3% copper) and that the average concentrations are likely below cleanup criteria; therefore, this pile is excluded from removal under this option.

- Does not require construction of access road to upper mine workings.
- Excavating 400 cy of waste rock and soil with average concentrations of antimony, arsenic, or copper above the risk-based cleanup criteria of 252 mg/kg, 41 mg/kg, and 36,573 mg/kg respectively (soil around the mill foundation and waste rock piles WR-1 & WR-2).
- Excavate ~50 cy of suspected contaminated soil south of waste rock pile WR-1 along the discharge from Adit 2.
- Demolishing the concrete mill foundation using power equipment.
  - Estimated to be ~300 cy of reinforced concrete and contaminated soil.
- Loading the waste rock, contaminated soil and concrete (750 cy total) in 12-cy dump trucks and transporting to the temporary staging area for transfer to the 25-ton Rabanco bins.
- Transporting the bins to the rail station (60 miles) for transfer to the Roosevelt Regional landfill for disposal.
- Use a Niton XRF to assist in delineating the extent of excavation and to field check removal efforts. Collect a minimum of one composite confirmation sample from each area for verification of contaminant removal.
- Grade the mill site and areas (0.4 acre) from which waste rock and soil has been excavated to blend with the surrounding topography and promote drainage. Cover disturbed areas with 6 to 12 inches of topsoil (~460 cy), applying fertilizer, seeding with a USFS-approved seed mix, hydromulching, and planting tree seedlings at the mill site.

**ALTERNATIVE 3 – Excavation and On-site Disposal**

This alternative involves excavating soil, waste rock, and sediment with COI concentrations above the cleanup criteria, and disposing in an on-site repository. Two excavation options and two repository locations were evaluated for this alternative:

- **Excavation Option 1 – Removal Based on Contaminant MDCs:**
  Under this option, the MDC of COIs in each area would be compared to cleanup criteria to determine which areas needed to be excavated and removed. Based on this approach, soil around the mill foundation (S-1 & S-3) and waste rock piles WR-1, WR-2, WR-5, and WR-6 would be removed.
  - Construct 3,500 feet of temporary road to provide access to waste rock piles WR-5 and WR-6.
    - Construct a 15-foot wide temporary access road at a maximum slope of 10 percent along the hillside, which has a slope of up to 70 percent.
    - Excavate ~9,100 cy of material based on a cut-and-fill construction.
    - Compact and place ~500 cy of coarse road base.
    - Install temporary erosion control BMPs.
  - Excavating 1,200 cy of waste rock and soil with MDCs of antimony, arsenic, or copper above the risk-based cleanup criteria of 252 mg/kg, 41 mg/kg, and 36,573 mg/kg respectively (WR-1, WR-2, WR-5, WR-6, and soil around the mill foundation).
  - Excavate ~50 cy of suspected contaminated soil south of waste rock pile WR-1 along the discharge from Adit 2.
  - Loading the contaminated soil and waste rock, and transporting to an on-site repository. Two alternative repository locations were evaluated and are discussed below.
  - Use a Niton XRF to assist in delineating the extent of excavation and to field check removal efforts. Collect a minimum of one composite confirmation sample from each area for verification of contaminant removal.
  - Grade the areas (~0.5 acre) from which waste rock and soil has been excavated to blend with the surrounding topography and promote drainage. Apply 6 to 12 inches of growth media (630 cy), applying fertilizer, seeding with a USFS-approved seed mix, hydromulching, and planting tree seedlings at the mill site.

- Reclaim 3,500 feet of temporary access road by ripping compacted surfaces, grading to blend with the natural hillside to the extent possible, seeding ~2 acres with a USFS-approved seed mix and hydromulching.

- **Excavation Option 2 – Removal Based on Average Concentrations:**
  Under this option, the average concentration of COIs in each area would be compared to cleanup criteria to determine which areas needed to be excavated and removed. Based on this approach, soil around the mill foundation (S-1 & S-3) and waste rock piles WR-1 and WR-2 would be removed. While the single sample from waste rock pile WR-5 also exceeds cleanup criteria, this option assumes that the sample is an anomaly (88.3% copper) and that the average concentrations are likely below cleanup criteria; therefore, this pile is excluded from removal under this option.
  - Does not require construction of access road to upper mine workings.
  - Excavating 400 cy of waste rock and soil with average concentrations of antimony, arsenic, or copper above the risk-based cleanup criteria of 252 mg/kg, 41 mg/kg, and 36,573 mg/kg respectively (soil south of the mill foundation and waste rock piles WR-1 & WR-2).
  - Excavate ~50 cy of suspected contaminated soil south of waste rock pile WR-1 along the discharge from Adit 2.
  - Loading the contaminated soil and waste rock, and transporting to an on-site repository. Two alternative repository locations were evaluated and are discussed below.
  - Use a Niton XRF to assist in delineating the extent of excavation and to field check removal efforts. Collect a minimum of one composite confirmation sample from each area for verification of contaminant removal.
  - Grade the areas (0.1 ac) from which waste rock and soil has been excavated to blend with the surrounding topography and promote drainage. Cover disturbed areas with 6 to 12 inches of topsoil (~190 cy), applying fertilizer, seeding with a USFS-approved seed mix, hydromulching, and planting tree seedlings at the mill site.

- **Repository Option 1 – Primary Location at Mill Site:**
  Under this option, the repository would be constructed over the mill foundation at the mill site. Based on a preliminary hydrologic analysis using the simplified Soil Conservation Service (SCS) method and an estimated stream channel cross-section, this area should be well above the 100-year, 24-hour flood level for Trout Creek. Additionally, field staff observed no evidence of flooding or indication of a floodplain in this area during the Site reconnaissance.
  - Construct the repository to the approximate configuration shown in Figure 3. The proposed design is conceptual and the actual engineered designs may differ considerably based on site-specific conditions and constraints. Before commencing final design, the Site should be inspected and additional information gathered regarding the physical dimensions and suitability of the concrete foundation. However, the general design configurations and site preparation tasks described in the following bullets will likely be very similar independent of location.
  - The area can accommodate up to approximately 2,000 cy of mine waste. The configuration shown in Figure 3 is based on excavation option 2 (~450 bank cy of mine waste, plus up to 250 bank cy from waste rock pile WR-3 as needed to complete coverage of the mill foundation) and includes the estimated waste volume plus 20 percent. Excavation option 1 (~1,250 bank cy) would only add about 1.3 feet of material on top of the configuration and would eliminate the need for additional material from waste rock pile WR-3.
  - Shape the repository to cover the exposed concrete mill foundation and blend with the surrounding topography to the extent possible. The repository slopes should not exceed a 3:1 horizontal to vertical (3H:1V) ratio and the top surface should be graded to minimize erosion, promote drainage, and prevent ponding on the repository surface. A 3H:1V slope is accessible to most earth moving equipment, suitable for revegetation, and generally considered to be a stable configuration for most materials (Utah Oil Gas and Mining 2007).

- Excavate a diversion channel along the uphill edge of the repository to intercept surface water run on. The v-shaped channel will be constructed with a slope of 1 to 2 percent, 1 to 2 feet deep with 1H:1V side slopes, and lined with riprap erosion protection (~20 cy). For cost estimation purposes, the assumed channel length is 220 feet. Riprap protection would be installed at the channel outlet to prevent erosion. Presumably, the riprap would be obtained from material screened on site.
- Place and compact the waste rock and contaminated soil in the repository in 8-inch thick lifts.
- Install repository cover. Two cover alternatives were evaluated for the repository and are discussed below.

- **Repository Option 2 – Alternate Location Along Ridge:**
  - Under this option, the repository would be constructed on a ridge above the access road to the Site, about ½ mile northwest of the mill site (Figure 4). This Site is above the Trout Creek floodplain, gently sloped, and relatively close to the mill site.
  - Under this option, the concrete mill foundation (~300 cy of concrete and soil) would be demolished using power equipment and placed in the repository.
  - Improve ~2,000 feet of existing access road to the repository to accommodate heavy equipment.
  - Clear and grub the repository site and stockpile the woody debris. Excavate topsoil (~1,080 to 2,220 cy depending on excavation option selected) from the repository footprint and stockpile for use in the repository cover and to cover the excavated waste areas and other disturbed areas.
  - Construct the repository to the approximate configuration shown on Figure 4. The proposed design is conceptual and the actual engineered design may differ considerably based on site-specific conditions and constraints. Before commencing final design, the site should be inspected and additional information gathered regarding the suitability of the proposed site. However, the general design configuration and site preparation tasks described in the following bullets will likely be very similar independent of location.
  - Shape the repository to blend with the surrounding topography. The foundation slope should not exceed 10 percent. The repository slopes should be 3H:1V or less and the top surface should be graded to minimize erosion, promote drainage, and prevent ponding on the repository surface.
  - The repository will have a minimum available storage capacity of 1,800 cy (estimated maximum volume of waste material plus 20 percent). Assuming an average waste depth of 3 feet, the repository will cover from 7,560 to 16,200 sf (~0.2 to 0.5 ac) depending on the excavation option selected.
  - Excavate a diversion channel along the uphill edge of the repository to intercept surface water run on. The v-shaped channel will be constructed with a slope of 1 to 2 percent, 1 to 2 feet deep with 1H:1V side slopes, and lined with riprap erosion protection (~20 cy). For cost estimation purposes, the assumed channel length is 200 feet. Riprap protection would also be installed at the channel outlet to prevent erosion. Presumably, the riprap would be obtained from material screened on site.
  - Place and compact the mill foundation concrete, waste rock and contaminated soil in the repository in 8-inch thick lifts.
  - Install repository cover. Two cover alternatives were evaluated for the repository and are discussed below.

- **Repository Cover Options**

  Two cover options were evaluated for the mine waste repository and are discussed below. Repository cover material quantities will differ depending on the excavation, repository location, and cover options selected.

- **Option 1 – Engineered Cover:**
  - Consists of a geosynthetic membrane sandwiched between a 12 inch-thick fine bedding layer and a 6 inch-thick drainage layer, overlain by 2 feet of well-graded soil (Figure 3).
  - Fine bedding material will be generated on site by screening the mine waste and contaminated soil. The screened fines will be placed and compacted over the waste material in one 12-inch thick lift.
  - A geosynthetic membrane (geosynthetic clay liner [GCL] or high density polyethylene [HDPE] liner) will be installed over the bedding layer and tested per the manufacturer's specifications.
  - A 6-inch thick drainage layer will be carefully placed over the GCL in one loose lift.
  - A single layer of filter fabric will be placed over the drainage layer to prevent piping of fines from the cover soil into the coarse material.
  - A 24-inch thick, well-graded soil cover will be placed over the filter fabric in one lightly compacted 12-inch lift and one loose 12-inch lift. Soil amendments would be added and the cover will be seeded using a USFS-approved seed mix and hydromulched.
  - Place woody debris generated during the removal action over the final cover surface to prevent erosion and provide natural habitat.
- **Option 2 – Earthen Clay Cover:**
  - Consists of a 12-inch thick earthen clay liner overlain with a 6-inch thick drainage layer and 24 inches of well-graded soil (Figure 3).
  - Clay material will be placed over the waste material and compacted in two 6-inch thick lifts to achieve a permeability of less than $1x10^{-6}$ centimeters per second (cm/sec).
  - A 6-inch thick drainage layer will be carefully placed over the compacted clay in one loose lift.
  - A single layer of filter fabric will be placed over the drainage layer to prevent piping of fines from the cover soil into the coarse material.
  - A 24-inch thick, well-graded soil cover will be placed over the filter fabric in one lightly compacted 12-inch lift and one loose 12-inch lift. Soil amendments would be added and the cover would be seeded using a USFS-approved seed mix and hydromulched.
  - Place woody debris generated during the removal action over the final cover surface to prevent erosion and provide natural habitat.

**ALTERNATIVE 4 – Treatment of Adit Discharges**

Water discharging from Adit 1 is not acidic (pH = 7.3) but exceeds the ecological cleanup criteria for barium and copper (chromium is reported as non-detect but the MDL of 10 micrograms per liter [μg/L] is above the cleanup criteria of 2 μg/L). However, the flow is minimal (< 1 gpm) and only continues for about 50 feet before infiltrating. There is no evidence of significantly higher flows and it does not appear that the adit discharge ever reaches Trout Creek. While concentrations of barium and copper (11 and 126 μg/L, respectively) exceed ecological cleanup criteria, they are significantly below the human health cleanup levels of 2,000 and 1,300 μg/L, respectively. While there is no human health risk and minimal risk to ecological receptors, it may be beneficial to eliminate the potential exposure source and minimize infiltration of the adit discharge into waste rock outside the adit. In addition, the native soil should naturally attenuate metals in the adit discharge and prevent groundwater degradation. A small-scale column test could be performed with the native soil and water from the adit discharge to evaluate the metals attenuating capacity of the native soil.

Because of the low flow and limited risk, only one option was considered for addressing the Adit 1 discharge:

- **Adit 1 Discharge Treatment Option 1 – Natural Attenuation:**
  - A small earthen channel would be hand-excavated to convey the adit discharge from the adit opening around the waste rock to native soils. The channel would be oversized and filled with rocks (not waste rock) from the immediate area to eliminate a surface water exposure. The channel would drain to the nearest relatively level area on native soil where a small infiltration basin would be excavated and filled with rock.
  - Excavate ~50 feet of earthen v-shaped channel, 1 to 2 feet deep with 1H:1V side slopes using hand tools.
  - Excavate a 10-foot by 10-foot area to a depth of 1 to 2 feet using hand tools and fill with rock. Cover with filter fabric and replace excavated material.
  - Place a portion of the excavated soil along the up slope side of the channel and infiltration basin to minimize the intrusion of storm water run off.

Water discharging from Adit 2 is not acidic (pH = 7.6) but exceeds the ecological cleanup criteria for barium and copper (chromium is reported as not detected) at the portal. The discharge flows along a road adjacent to the mill site for about 500 feet and eventually into Trout Creek. Metals concentrations significantly increase along this route and exceed ecological cleanup criteria for barium, copper, iron, and lead (chromium is reported as not detected) just before the confluence with Trout Creek. The increase in metals concentrations indicates that the adit discharge likely flows through mine waste or contaminated soil at the mill site. Metals concentrations in Trout Creek are relatively the same upstream and downstream of the Site indicating no impacts from the Adit 2 discharge. Furthermore, the adit flow represents less than 1 percent of the overall flow in Trout Creek and metals concentrations in all water samples were well below the human health cleanup criteria. Flows from Adit 2 were estimated in the SI to range from 150 to 450 gpm. Three options were considered for addressing the Adit 2 discharge:

- **Adit 2 Discharge Treatment Option 1 – Channel Reconstruction:**
  - This option consists of channelizing the adit discharge to eliminate contact with mine waste material and minimize contaminant loading to Trout Creek.
  - The channel would be designed to convey a minimum peak flow of 500 gpm.
  - Construct ~320 feet of stream channel to convey discharge from Adit 2 to Trout Creek. A defined channel will be excavated to the approximate configuration shown on Figure 5, and filled with ~50 cy of streambed material to mimic a natural stream channel. Approximately 80 cy of material will be excavated to form the channel.
  - The channel will avoid the mill site and provide a more direct path to Trout Creek.
  - The channel will be widened at the road crossing to accommodate a vehicular traffic crossing.
- **Adit 2 Discharge Treatment Option 2 – Passive Treatment:**
  This option consists of constructing a passive treatment system to achieve Water Quality ARARs in the Adit 2 discharge. Because the discharge is already at a neutral pH (7.6), passive treatment options are limited primarily to technologies that slow the flow down and increase retention time to promote metals precipitation and settling of suspended solids.
  - Aerobic wetlands require approximately 200 sf of area to treat 1 gpm. Using a design flow rate of 500 gpm, the wetlands would require more than 2 ac, which is greater than the available area at the Site.
  - Settling ponds typically require a holding time of 12 to 24 hours. At 500 gpm, the required pond capacity is 360,000 gallons for 12 hours and 720,000 gallons for 24 hours. At an average depth of 6 feet, a 24-hour settling pond would require a flat area of about 16,000 sf. While this size area is available between Adit 2 and Trout Creek, the ground is sloped at nearly 7 percent (i.e., 14-foot drop over a 200-foot length), which would significantly increase the disturbance area and require a 20-foot high downstream embankment.

- A series of three smaller settling ponds (50-feet wide by 100-feet long by 4-feet deep) would provide a holding time of 12 hours and require less overall disturbance than a single larger pond. Specifics are as follows:
  - Estimated peak flow rate = 500 gpm.
  - Three 50-foot by 100-foot unlined ponds would be excavated in the area between Adit 2 and Trout Creek to the approximate configuration shown in Figure 6. Each pond would be excavated to a depth of 4 feet and a minimal separation distance of 20 feet would be maintained between ponds. Pond sides would be sloped at 2H:1V.
  - An overflow channel would be constructed between the ponds to facilitate staged flow from pond to pond. The v-shaped channel would be 1 to 2 feet deep, with 2H:1V side slopes. Riprap erosion protection would be placed in the channel and at the final pond discharge point.
  - Approximately 1,970 cy of material would be excavated to form the ponds and channel. The excavated material would be characterized and could potentially be used in a repository cover or to cover the mill foundation.
  - FR 6320 would be realigned between the ponds and waste rock pile WR-3. A 12-inch corrugated steel culvert would be placed under the road to convey the pond discharge to Trout Creek.
  - A diversion channel would be excavated along the up gradient edge of the ponds to intercept surface water run on. The v-shaped channel would be ~230 feet long, 1 to 2 feet deep, with 2H:1V side slopes. Riprap protection (~24 cy) would be installed in the channel and at the channel outlet to prevent erosion.
- The ponds may be subject to inflow from shallow groundwater and subsurface flows in the area. The minimum pond bottom elevation should be maintained above the high water elevation in Trout Creek.

- **Adit 2 Discharge Treatment Option 3 – ViroMine™:**
  This option consists of constructing a passive treatment system using ViroMine™ to achieve Water Quality ARARs in the Adit 2 discharge. ViroMine™ is a custom blend of reagents developed from aluminum mining that work by forming strong bonds with metals ions and converting them into an insoluble, nonreactive sediment. Metals removal efficiencies up to 99 percent have been demonstrated in field trials at mine sites in Australia, Europe, Laos, and the U.S. Five different blends have been developed specifically for treating water at different pH levels. The reagents can be applied in powder, slurry, or pellet form. Because of the high flow rate from Adit 2 (up to 500 gpm) and the limited available for storage, a flow-through treatments system would be most suitable. Flow-through systems have been installed at similar sites using a gabion filtration basket and ViroMine™ pellets. Because the ViroMine™ technology is proprietary, available design information or guidance is very limited. Therefore, the design presented below is conceptual based on the available information. More detailed design information will be required for the final engineering design and a pilot-study is typically required to develop the optimum reagent mixture and application rate.
  - Excavate a 100-foot long, 4-foot wide by 4-foot deep trench (~60 cy). The trench would begin at the Adit 2 portal and the adit discharge would be directed into the trench (Figure 5).
    - Install 60-mil HDPE liner (~2,000 sf) along the bottom and sides of the trench,
    - Install gabion structures in the trench and fill with ViroMine™ pellets (~20 tons).
    - Place filter fabric (~70 sy) over the gabions, cover with 1 foot of soil (~25 cy), and lightly compact.
    - Place the residual excavated soil along the up slope side of the trench to prevent the intrusion of storm water run off.
  - Construct ~220 feet of stream channel to convey discharge from Adit 2 to Trout Creek. A defined channel will be excavated to the approximate configuration shown on Figure 5, and

filled with ~30 cy of streambed material to mimic a natural stream channel. Approximately 60 cy of material will be excavated to form the channel.
  - The channel will avoid the mill site and provide a more direct path to Trout Creek.
  - The channel will be widened at the road crossing to accommodate a vehicular traffic crossing.

## 5.2 Analysis of Selected Removal Action Alternatives

The removal action alternatives were evaluated based on the following criteria:

- Effectiveness
- Implementability
- Relative cost

Effectiveness is defined as the ability of an alternative (relative to other options in the same technology sub-category) to:

- Protect public health and the community, protect workers during implementation, and protect the environment – addresses whether or not the remedy provides adequate protection and describes how risks posed through each pathway are eliminated, reduced, or controlled through treatment, engineering controls, or institutional controls; and
- Comply with ARARs – addresses whether or not a remedy will meet all ARARs or other federal and state environmental statutes and/or provide grounds for invoking a waiver.

Implementability encompasses the technical and administrative feasibility of implementing a removal action and the availability of resources needed to implement the removal action. It also takes into account legal considerations. Factors of particular consideration include removal action and operational feasibility; availability of equipment, personnel, and treatment capacity; community acceptance; and the ability to obtain necessary permits for off-site actions.

- Technical feasibility – refers to construction and operational considerations, the demonstrated performance and useful life, adaptability to site-specific environmental conditions, whether it contributes to remedial performance, and whether it can be implemented within 1 year[3].
- Administrative feasibility – refers to the permits required, easements or right-of-ways required, impacts on adjoining properties, the ability to implement institutional controls, and the likelihood of obtaining an exemption from statutory limits, if needed.
- Availability – includes the availability of equipment, personnel and services, outside laboratory testing services (if needed), off-site treatment and disposal capacity (if needed).

The relative cost of each alternative was evaluated based on professional experience, engineering judgment, and standard cost estimating tools. Primary cost considerations include:

- Capital costs,
- Engineering and design costs, and
- Operation and maintenance (O&M) costs.

[3] The ability to be implemented in 1 year is a specific criterion to be used in the alternative comparative analysis as outlined in EPA's "Guidance on Conducting Non-Time Critical Removal Actions Under CERCLA" (1993). There is a 1-year statutory limit for fund-financed removal actions.

The estimated costs for each task are summarized in Table 13. Costs are based on experience at similar sites, on published data and reports, and on inquiries to possible vendors. Many removal action unit costs were obtained from R.S. Means data, and include overhead and profit (2005). Estimated costs relied on several significant assumptions regarding site conditions and are based on conceptual design only. The estimated costs are intended for alternative comparison only and are not suitable for construction bidding purposes.

Assumptions made in preparing the cost estimate include:

- All removal actions can be completed in one field season using standard removal action equipment.
- All borrow soil for covering the repository and excavated waste areas will be available either (1) from within the repository footprint if the secondary repository location is selected, or (2) from a nearby (within 50 miles) off-site source.
- Significant cost savings may be realized from using a suitable on-site borrow source for growth medium and other materials.
- The coarse drainage material, riprap, and clay material will be available and purchased from a nearby (within 50 miles) off-site source and transported to the Site.
- A staging area can be established at the intersection of Index-Galena Road and FR 6320 for the offloading of equipment and materials. This will enable the use of smaller equipment at the Site and lessen the degree of improvement to FR 6320.
- Improvements to FR 6320 will be minimal to accommodate site access.
- Construction of an access road to the upper workings will not require blasting of rock or special construction methods.
- Costs for the adit discharge treatment alternatives assumes that they would be implemented in concert with Alternatives 2 or 3 and would not require a separate construction field season or additional mobilization charges.
- The mine waste and contaminated soil will be screened on site to provide the fine bedding materials needed in the repository cover.
- The proposed sites for the repository are suitable and accessible, and will not require significant modification.
- The waste rock, contaminated soil, concrete mill foundation, and site debris are non-hazardous and can be disposed of in a sanitary landfill.
- The USFS archaeologist will approve covering of the mill foundation and removal of site debris.
- All trees and brush felled during the removal action will be stockpiled and placed over the seeded areas to minimize erosion, or burned on site.
- Maintenance and monitoring costs are based on biannual site visits for a 3-year period following completion of removal action.
- Fees based on removal action costs included 20 percent for design, and 10 percent for construction management, plus a 20 percent contingency on total project costs.
- Present value corrections were not calculated because of the short duration of the removal action and monitoring.

### 5.3 Identification of Data Gaps

Several data gaps were identified during the preparation of this EE/CA, including:

- Lack of sufficient background samples to develop reasonably accurate average background COI concentrations for all media;
- A single sample from waste rock pile WR-5 that appears to have been copper ore (i.e. having unusually high metals content);

- Suspected contaminated soil near the mill site;
- Concrete mill foundation not characterized;
- Native soil metals attenuation capacity at the Adit 1 discharge;
- Feasibility of treating the Adit 2 discharge with ViroMine™ media;
- Potential presence of T&E amphibian species in areas around adit discharges at the Site;
- Very limited surface water flow information; and
- Minimal topographical data for the Site, particularly the upper workings and alternate mine waste repository location.

The data gaps, potential issues, recommended actions and estimated costs are summarized in Table 14. Broad assumptions regarding material quantities and site conditions were used to address the data gaps in the development of conceptual designs presented in this EE/CA. However, additional data that is critical to the removal action should be collected before preparing the final design.

## 6.0 COMPARATIVE ANALYSIS OF REMOVAL ACTION ALTERNATIVES

The removal action alternatives were compared based on the following criteria:

- **Effectiveness**
  - Protective of human health and the environment
  - Complies with ARARs, especially key ARARs identified for the Site
  - Achieves RAOs
- **Implementability**
  - Technical Feasibility
  - Administrative Feasibility
  - Availability of Resources
- **Cost**

The comparative analysis of removal action alternatives is described below by criteria and summarized in Table 15. An anticipated level of state and community acceptance is presented for each alternative; actual acceptance will be determined during the public comment period. Physical hazards were assumed to be equally addressed in all of the action alternatives as discussed in Section 5.1. Alternatives 2 and 3 focus on the removal of mine waste and are both intended to be combined with Alternative 4 to address the adit discharges and surface water quality. None of the alternatives would address cleanup or treatment of sediments in NFSR except to limit new sediment contributions from the Site. Therefore, Sediment Quality ARARs are not fully complied with in any alternative.

**<u>Effectiveness</u>**

- Alternative 1 – No Action is the least effective.
  - The mine waste and physical hazards would continue to pose a significant threat to public visiting the Site.
  - The mine waste and adit discharges would also continue to pose a threat to ecological receptors and continue contributing metals loading to Trout Creek and the NFSR.
  - Not protective of human health and the environment, and would not comply with ARARs or achieve any RAOs.
- Alternative 2 – Off-site Disposal provides the most protection to human health and the environment by removing the mine waste from the Site and disposing of in a controlled facility.
  - Moderate compliance with Soil Quality ARARs, high compliance with Solids Disposal ARARs, and high compliance with FP S&G ARARs; would achieve most RAOs by removing mine waste from the Site.

- High short-term and long-term effectiveness and permanence.
- Minimal potential risk to human health and the environment during off-site transportation of mine waste.
- No reduction in toxicity or volume through treatment, but moderate to high reduction in toxicity through containment and capping.
- Excavation option 1 (maximum contaminant concentrations) would be more compliant with Soil Quality ARARs and be more effective than option 2 (average contaminant concentrations) because more of the contaminant source (i.e. mine waste) would be removed.

- Alternative 3 – On-site Disposal is moderate to highly protective of the human health and environment, moderately compliant with Soil Quality ARARs, moderate to highly compliant with Solid Waste Disposal ARARs, compliant with FP S&Gs, and would achieve most RAOs.
  - Excavation option 1 (maximum contaminant concentrations) would be more compliant Soil Quality ARARs. It would also be more effective than option 2 (average contaminant concentrations) because more of the contaminant source (i.e. mine waste) would be removed.
  - Moderate short-term effectiveness and high long-term effectiveness and permanence.
  - No reduction in toxicity or volume through treatment, but moderate to high reduction in toxicity through containment and capping.
  - Repository option 2 (ridge) would be more effective than option 1 (mill site) and better comply with FP S&Gs because the mine waste would be relocated to an area above the 500-year (as well as the 100-year) Trout Creek flood elevation and out of the Riparian Habitat Conservation Area.
  - Repository option 2 may be subject to less potential vandalism and require less maintenance because it would not be visible from FR 6320. Option 2 may also provide a more stable configuration because of the proper subgrade preparation and lower bed slope. Option 1 (mill site) would better isolate the waste rock from ground water due to the concrete mill floor and foundation walls.
  - Cover option 1 (engineered cover) would be slightly more effective than option 2 (earthen clay cover) in reducing infiltration through the waste material. Option 1 meets the substantive Solids Disposal ARARs by capping them in accordance with state landfill standards (WAC 173-350-400). The cap would consist of 2 feet of soil and a geomembrane (the presumptive cover prescribed by state regulations). Option 2 may meet ARARs if analyses during removal design indicate the alternative cover would satisfy performance standards in the regulations (WAC 173-350-400(3)(e)(I)).

- Alternative 4 – Treatment of Adit Discharges is moderate to highly protective of human health and the environment, offers low to high compliance with Water Quality ARARs, and would achieve the surface water RAO.
  - Option 1 at Adit 1 should be more effective than no action, is expected to comply with Water Quality ARARs and addresses the surface water RAO.
  - At Adit 2, the effectiveness of each option is speculative and will need to be evaluated through periodic surface water quality monitoring.
    - Option 1 (channel reconstruction) would be the least effective and minimally compliant with Water Quality ARARs. There would be no significant improvement to water quality discharging from the adit.
    - Option 2 (settling ponds) should be moderately to highly effective and compliant depending on the adit discharge rate and length of retention time in the settling ponds. However, the ponds may attract wildlife as a drinking water source.
    - Option 3 (ViroMine™) may be moderately to highly effective and compliant with Water Quality ARARs but will require a pilot-test to determine the optimum blend of reagents and anticipated efficiency. Effectiveness may also fluctuate with adit discharge rate and may decline over time because of plugging or depletion of reagents.

**Implementability**

- Alternative 1 – No Action is most technically feasible and easiest to implement; however, state and community acceptance would likely be minimal.
- Alternative 2 – Off-site Disposal would be moderately to highly implementable.
  - The availability of service and materials is high.
  - Excavation option 1 (maximum contaminant concentrations) would be more difficult to implement because of the access required to reach the upper waste rock piles (WR-5 and WR-6).
  - Excavation option 1 is likely to have higher agency and community acceptance because more mine waste is removed from the Site.
  - Excavation option 1 would result in greater disturbance and collateral impact because of the access road construction, and removal of waste rock piles WR-5 and WR-6.
- Alternative 3 – On-site Disposal is moderately to highly implementable.
  - The availability of service and materials is high.
  - All options are implementable using standard construction equipment and methods.
  - Excavation option 1 (maximum contaminant concentrations) would be significantly more difficult to implement because of the access required to reach the upper waste rock piles (WR-5 and WR-6).
  - Excavation option 1 is likely to have higher agency and community acceptance because more mine waste is removed from the Site.
  - Excavation option 1 would result in greater disturbance and collateral impact because of the access road construction, and removal of waste rock piles WR-5 and WR-6.
  - Repository option 2 (ridge) would be slightly more difficult to implement than option 1 because of the additional access road improvements and site clearing required.
  - Both cover options would easily implementable and agency and community acceptance should be relatively equal.
- Alternative 4 – Treatment of Adit Discharges is moderate to highly implementable.
  - The availability of service and materials is high.
  - All options are implementable using standard construction equipment and methods.
  - At Adit 1, the No Action option would be easiest to implement; however, agency and community acceptance would likely be low.
    - Option 1 would be relatively easy to implement and result in minimal collateral impact and disturbance.
  - At Adit 2, option 1 (channel reconstruction) would be the easiest to implement and result in minimal collateral impact and disturbance. However, agency and community acceptance would likely be low.
    - Option 2 (settling ponds) would be relatively easy to implement. Agency and community acceptance should be moderate to high.
    - Option 3 (ViroMine™) would be moderately difficult to implement because of the relative complexity compared to options 1 and 2. Agency and community acceptance is unknown and will depend on demonstrated effectiveness.

**Cost**

- Alternative 1 – No Action is the least expensive alternative.
- Alternative 2 – Off-site Disposal is the most expensive alternative.
  - Excavation option 1 (maximum contaminant concentrations) would be more expensive than option 2 (average contaminant concentration) because of the larger quantity of mine waste material, larger disturbance area, and the cost to construct and access road to the upper waste rock piles (WR-5 and WR-6).

- Alternative 3 – On-site Disposal is moderately to highly expensive.
  - Excavation option 1 (maximum contaminant concentrations) would be more expensive than option 2 (average contaminant concentration) because of the larger quantity of mine waste material, larger disturbance area, and the cost to construct and access road to the upper waste rock piles (WR-5 and WR-6).
  - Repository option 2 (ridge) would be more expensive than option 1 (mill site) because of the added cost of improving access, site clearing, and longer haul distance. Additional costs would also be required to demolish and remove the concrete mill foundation, or to import material and cover in place. Some costs may be offset by lessening the need for off-site growth medium.
  - Cover option 2 (earthen clay cover) would be more expensive than option 1 (engineered cover) because of the cost of importing clay material and the compaction requirements.
- Alternative 4 – Treatment of Adit Discharges is low to moderately expensive.
  - At Adit 1, option 1 is significantly more expensive than the No Action option.
  - At Adit 2, option 1 (channel reconstruction) would be the least expensive to construct and maintain. Option 2 (settling ponds) would be the most expensive and option 3 (ViroMine™) would be moderately expensive to construct.
    - Long-term maintenance costs for option 2 will be low to moderate depending on the frequency of sludge removal.
    - Long-term maintenance costs for option 3 will be low to moderate depending on potential plugging and the frequency of reagent replenishment.

## 7.0 RECOMMENDED REMOVAL ACTION ALTERNATIVE

Key features of the recommended removal action alternative are discussed below. Details are provided in Section 6.2 and on Figures 2 through 7. The preference expressed here is based on the analysis discussed in Sections 6.3 and 7.0, and summarized in Table 15. The recommended alternative is a combination of Alternatives of 3 and 4:

- **Alternative 3 – Excavation and On-site Disposal**
  - Excavation Option 2: Removal Based on Average COI Concentrations
  - Repository Location Option 1: Primary Location at Mill Site
  - Cover Option 1: Engineered Cover
- **Alternative 4 – Treatment of Adit Discharges**
  - Option 1: At Adit 1, natural attenuation
  - Option 2: At Adit 2, channel reconstruction and pilot treatability study with ViroMine™ media

Physical hazards would be mitigated as described in Section 5.1 under Removal Action Elements Common to All Removal Action Alternatives. Mine waste and contaminated soil with average contaminant concentrations above the risk-based cleanup levels would be removed and disposed of in an on-site repository over the concrete mill foundation. Sufficient soil samples would be collected from waste rock pile WR-5 to determine whether average contaminant concentrations exceed cleanup levels. However, for the purpose of estimating the cost of this alternative, it was assumed that the upper waste rock piles will remain in place and that construction of an access road to the upper workings will not be required.

At Adit 1, a small channel would be excavated to convey the discharge away from the waste rock. The channel would be excavated using hand tools and native rock (not waste rock) in close proximity to the area would be hand-place in the channel to eliminate any surface exposure. At Adit 2 the existing channel would be reconstructed and a treatability pilot study using ViroMine™ media would be conducted to determine the viability and efficiency of treating the adit discharge with a flow through system.

Specifics of the recommended removal action alternative are described below:

- **Alternative 3 – Excavation and On-site Disposal:**
  - Collect sufficient soil samples from waste rock pile WR-5 for analysis to determine whether average COI concentrations exceed cleanup levels. The cost estimate for this alternative assumes that the average concentrations will not exceed cleanup levels. However, if cleanup levels are exceeded, an access road to the upper workings would be constructed and WR-5 would be excavated along with the other waste rock piles.
  - Excavate 400 cy of waste rock and soil with average concentrations of antimony, arsenic, or copper above the risk-based cleanup criteria of 252 mg/kg, 41 mg/kg, and 36,573 mg/kg respectively (soil south of the mill foundation and waste rock piles WR-1 & WR-2).
  - Excavate 50 cy of suspected contaminated soil south of waste rock pile WR-1 along the discharge from Adit 2.
  - Place the contaminated soil and waste rock directly over the concrete mill foundation in 8-inch compacted lifts; because of the proximity to the mill site, loading and transportation of the material will not be required.
  - Use a Niton XRF to assist in delineating the extent of excavation and to field check removal efforts. Collect a minimum of one composite confirmation sample from each area for verification of contaminant removal.
  - Use additional material from waste rock pile WR-3 to cover any remaining exposed mill foundation; estimated that 250 cy would be required for cost estimation purposes.
  - Construct an engineered cover over the repository consisting of:
    - A 12-inch thick layer of fine bedding material (330 cy) generated on site by screening the mine waste and contaminated soil. The screened fines will be placed and compacted over the waste material in one 12-inch thick lift.
    - Installing a GCL (1,160 sy) over the bedding layer and test per the manufacturer's specifications.
    - Carefully place a 6-inch thick drainage layer (170 cy) over the GCL in one loose lift.
    - Lay a single layer of filter fabric (1,160 sy) over the drainage layer to prevent piping of fines from the cover soil into the coarse material.
    - Place 24 inches of well-graded soil (710 cy) over the filter fabric in one lightly compacted 12-inch lift and one loose 12-inch lift.
    - Add soil amendments and seed using a USFS-approved seed mix and hydromulch.
  - Grade the areas (0.1 ac) from which waste rock and soil has been excavated to blend with the surrounding topography and promote drainage. Cover disturbed areas with 6 to 12 inches of topsoil (~190 cy), applying fertilizer, seeding with a USFS-approved seed mix, hydromulching, and planting tree seedlings at the mill site.
  - Place woody debris generated during the removal action over the reclaimed areas and repository cover to prevent erosion and provide natural habitat.
- **Alternative 4 – Treatment of Adit Discharges:**
  - At Adit 1, hand-excavate a small earthen channel to convey the adit discharge from the adit opening around the waste rock to native soils.
    - Excavate ~50 feet of earthen v-shaped channel, 1 to 2 feet deep with 1H:1V side slopes using hand tools.
    - Excavate a 10-foot by 10-foot area to a depth of 1 to 2 feet using hand tools and fill with rock. Cover with filter fabric and replace excavated material.
    - Place a portion of the excavated soil along the up slope side of the channel and infiltration basin to minimize the intrusion of storm water run off.
  - At Adit 2, construct ~320 feet of channel to the approximate configuration shown on Figure 5, and fill with ~50 cy of streambed material to mimic a natural stream channel. The channel will convey discharge from Adit 2 to Trout Creek.

- Approximately 80 cy of material will be excavated to form the channel.
- The channel will avoid the mill site and provide a more direct path to Trout Creek.
- The channel will be widened at the road crossing to accommodate a vehicular traffic crossing.

- At Adit 2, conduct a pilot treatability study using ViroMine™ media to determine the viability and efficiency of treating the Adit 2 discharge with a flow through system.

The recommended alternative would dispose of a total of ~650 cy of waste rock and contaminated soil and provide minimal treatment of up to 720,000 gallons of adit discharge per day. The removal action would achieve RAOs and attain ARARs to the extent practical by eliminating the surface exposure pathway to mine waste, improving surface water quality and reducing contaminant loading to Trout Creek, and mitigating physical hazards at the Site. The recommended alternative would eliminate human health risk from exposure to the mine waste by removing waste material with average contaminant concentrations above the risk-based cleanup levels. While potential risk may remain from ingesting arsenic in the adit discharge, the concentration (3.1 μg/L) is well below EPA's public drinking water standard (i.e. MCL) of 10 μg/L and the health risk would be minimal, particularly for recreational use.

The recommended alternative will satisfy the eight factors in 40 CFR 300.415(b) as described below.

| Factor | Site Condition | Satisfied? |
|---|---|---|
| (1) Actual or potential exposure to nearby human populations, animals, or the food chain from hazardous substances, pollutants, or contaminants | Public access to contaminated soil and waste rock will be eliminated by removing the source. Overall surface water quality at the Site should improve significantly following removal of the primary waste source. | Yes |
| (2) Actual or potential contamination of drinking water supplies or sensitive ecosystems | There is no public water supply and, although water discharging from Adit 2 exceeds ARAR-based criteria, there is no measurable impact to Trout Creek. The Adit 2 discharge water quality will be improved by preventing contact with mine wastes and promoting suspended solids removal. | Yes |
| (3) Hazardous substances, pollutants, or contaminants in drums, barrels, tanks, or other bulk storage containers that may pose a threat of release | No drums, barrels, tanks, or bulk storage containers on site | Yes |
| (4) High levels of hazardous substances, pollutants, or contaminants in soils largely at, or near, the surface that may migrate | Contaminated soil and waste rock will be removed. | Yes |
| (5) Weather conditions that may cause hazardous substances, pollutants, or contaminants to migrate or be released | The waste rock and contaminated soils will be removed. | Yes |
| (6) Threat of fire or explosion | No flammable materials on site | Yes |
| (7) The availability of other appropriate federal or state response mechanisms to respond to the release | The Site is on USFS land and is being addressed by the USFS. | Yes |
| (8) Other situations or factors that may pose threats to public health or the environment | Physical hazards will be mitigated. | Yes |

The total estimated removal action cost for the recommended alternative is $244,986. This cost assumes that upper waste rock piles (WR-4, WR-5, and WR-6) will be left in place and construction of access to the upper workings will not be required. If removal of waste rock pile WR-5 is determined to be necessary, the total cost would increase by approximately $200,000.

## 8.0 FOREST SERVICE DISCLAIMER

This abandoned mine/mill site was created under the General Mining Law of 1872 and is located solely on National Forest System (NFS) lands administered by the USFS. The USFS has conducted a PRP search relating to this Site and has been unable to identify any current claimants or viable PRPs at this time. The United States has taken the position and courts have held that the United States is not liable as an "owner" under CERCLA Section 107 for mine contamination left behind on NFS lands by miners operating under the 1872 Mining Law. Therefore, USFS believes that this Site should not be considered a "federal facility" within the meaning of CERCLA Section 120 and should not be listed on the Federal Agency Hazardous Waste Compliance Docket. Instead, this Site should be included on EPA's CERCLIS database. Consistent with the June 24, 2003 OECA/FFEO "Policy on Listing Mixed Ownership Mine or Mill Sites Created as a Result of the General Mining Law of 1872 on the Federal Agency Hazardous Waste Compliance Docket," we respectfully request that the EPA Regional Docket Coordinator consult with the USFS and EPA Headquarters before making a determination to include this Site on the Federal Agency Hazardous Waste Compliance Docket.

The proposed removal action designs presented in this EE/CA are conceptual only and not intended for removal action. All material quantities are estimates only and should be verified for final design.

Prepared by:

**Millennium Science and Engineering, Inc.**

2/11/08

Michael J. Puett, P.E. Date
Principal Author

**Millennium Science and Engineering, Inc.**

2/11/08

Paul Hunter, P.G. Date
Technical Reviewer

EXPIRES 9/27/09

R1972

## REFERENCES


Cascade Earth Sciences 2005. "Site Inspection Report, Sunset Mine, Mt. Baker-Snoqualmie National Forest." Prepared for the USFS. July.

Dillishaw, Theresa 2008. Personnel communication. Roosevelt Regional Landfill/Rabanco.

Millennium Science and Engineering, Inc. 2006. "Streamlined Human Health and Ecological Risk Assessment, Sunset Mine, Mt. Baker-Snoqualmie National Forest." Prepared for the USFS. May.

R.S. Means 2005. *Environmental Remediation Cost Data – Unit Price.* Reed Construction Data, Kingston, Mass. 11th Annual Edition.

U.S. Environmental Protection Agency (EPA). 1991. "Risk Assessment Guidance for Superfund (RAGS), Volume 1: Human Health Evaluation Manual (Part B, Development of Risk-based Preliminary Remediation Goals)." Interim. EPA Publication 9285.7-01B. EPA Office of Emergency and Remedial Response. Washington, DC.

EPA 1993. "Guidance on Conducting Non-Time Critical Removal Actions Under CERCLA." EPA/540/F-94-009. Washington, D.C.

EPA.2004a. "Region 9 Preliminary Remediation Goals, Intercalc Tables." Online address: http://www.epa.gov/region09/waste/sfund/prg/

EPA.2006. "National Recommended Water Quality Criteria." EPA Office of water. Online address: http://www.epa.gov/waterscience/criteria/wqcriteria.html

EPA 2007. "Aquatic Life Ambient Freshwater Quality Criteria – Copper." EPA-822R-07-001. February.

U.S. Census Bureau (USCB) 2006. 2006 Population Estimate for Index, Washington. Online address: http://factfinder.census.gov/servlet/SAFFPopulation?_event=Search&_name=index&_state=04000US53&_county=index&_cityTown=index&_zip=&_sse=on&_lang=en&pctxt=fph

U.S. Forest Service (USFS) 2003. "Abbreviated Preliminary Assessment, Sunset Mine and Millsite, Mt. Baker-Snoqualmie National Forest." September.

Utah Oil Gas and Mining 2007. "The Practical Guide to Reclamation in Utah." May. Online address:

Washington Department of Ecology (WDOE 2001). "Model Toxics Control Act Cleanup (MTCA) Regulation." WAC Chapter 173-340-900, Table 745-1, Method A Soil Cleanup Levels for Industrial Properties.

WDOE 2004. "Freshwater Sediment Quality Standards." WAC Chapter 173-204.

Western Regional Climate Center 2007. Washington Climate Summaries. http://www.wrcc.dri.edu/summary/climsmwa.html (and linked pages), Desert Research Institute, Reno, Nevada.

# Tables

**Table 1. Monthly Climatic Averages for Baring, Washington WSO**
**Sunset Mine EE/CA**

| Parameter | Month | | | | | | | | | | | | Annual |
|---|---|---|---|---|---|---|---|---|---|---|---|---|---|
| | Jan | Feb | Mar | Apr | May | Jun | Jul | Aug | Sep | Oct | Nov | Dec | |
| Average Maximum Temperature (°F) | 41.0 | 46.2 | 52.1 | 58.5 | 64.8 | 69.1 | 74.9 | 74.9 | 69.0 | 58.7 | 45.9 | 40.2 | 57.9 |
| Average Minimum Temperature (°F) | 31.1 | 32.0 | 34.4 | 37.8 | 43.3 | 48.0 | 51.6 | 51.9 | 47.4 | 41.2 | 35.1 | 31.4 | 40.4 |
| Average Total Precipitation (in) | 16.26 | 10.92 | 10.75 | 7.77 | 5.36 | 3.90 | 2.25 | 2.31 | 4.94 | 9.78 | 17.94 | 16.00 | 108.2 |
| Average Total Snowfall (in) | 17.8 | 8.1 | 3.7 | 0.7 | 0.0 | 0.0 | 0.0 | 0.0 | 0.0 | 0.7 | 5.2 | 15.2 | 51.0 |
| Average Snow Depth (in) | 6 | 4 | 1 | 0 | 0 | 0 | 0 | 0 | 0 | 0 | 1 | 3 | 1 |

Notes:
Source: National Weather Service, Period of Record 2/19/70 to 4/30/07
Percent of possible observations for period of record: maximum temperature = 96%, minimum temperature = 95.9%, precipitation = 95.6%, snowfall = 97.2%, snow depth = 96.8%
°F = Degrees Fahrenheit
in = inches

**Table 2. Mine Waste Analytical Results Summary**
**Sunset Mine and Millsite**

| Sample ID | WR Pile | Date Collected | pH | Analyte Concentration (mg/kg) | | | | | | | | | | | | | | | | | | | | |
|---|---|---|---|---|---|---|---|---|---|---|---|---|---|---|---|---|---|---|---|---|---|---|---|---|
| | | | | Ag | Al | $As_T$ | Ba | Be | Cd | Co | $Cr_3$ | $Cr_6$ | $Cr_T$ | Cu | Fe | Hg | Mn | Ni | Pb | Sb | Se | Tl | V | Zn |
| SM-S1 | Soil in front of mill | 6/22/2004 | 5.6 | 24 | 10600 | 60 | 20.1 | 0.1 | 2.5 | 10 | NA | 0.429 | 12 | 16500 | 35700 | 0.22 | 506 | 20 | 72 | 5 | 25 | 1.5 | 24.1 | 100 |
| SM-S2 | | 6/22/2004 | 6.6 | 1.8 | 8220 | 9 | 40.5 | 0.1 | 0.5 | 7 | NA | NA | 13 | 2420 | 19200 | 0.025 | 319 | 12 | 18 | 1 | 5 | 0.3 | 26.1 | 60 |
| SM-S3 | | 6/22/2004 | 6.0 | 47 | 11400 | 50 | 43.7 | 0.1 | 5 | 10 | NA | 103.6 | 13 | 24500 | 40000 | 0.27 | 517 | 10 | 130 | 10 | 50 | 2.5 | 27.1 | 100 |
| SM-WR1-1 | WR-1 | 6/22/2004 | 7.4 | 18 | 14700 | 50 | 68 | 0.1 | 5 | 16.0 | NA | 6.029 | 19 | 28100 | 54708 | 1.06 | 970 | 10 | 140 | 10 | 50 | 2.5 | 30.7 | 100 |
| SM-WR8 | | 6/23/2004 | 6.0 | 24.0 | 14300 | 49.3 | 41.9 | 0.2 | 0.91 | 11 | NA | 0.558 | 18 | 30900 | 40300 | 0.41 | 646 | 5 | 122 | 10 | 2.9 | 0.18 | 33.4 | 1078 |
| SM-WR9 | | 6/23/2004 | 5.5 | 40 | 11600 | 59.7 | 82.1 | 1 | 1.0 | 11 | NA | 84.79 | 13 | 3800 | 60000 | 0.17 | 634 | 20 | 512 | 20 | 3 | 0.15 | 22 | 128 |
| SM-WR2-1 | WR-2 | 6/23/2004 | 3.5 | 125 | 11300 | 280 | 36.7 | 0.5 | 2.5 | 9 | NA | NA | 19 | 6680 | 16700 | 2.34 | 380 | 5 | 131 | 10 | 25 | 1.5 | 41 | 50 |
| SM-WR2-2 | | 6/23/2004 | 2.9 | 40 | 10800 | 110 | 67.8 | 0.5 | 1.5 | 10 | NA | 0.53 | 21 | 6070 | 94500 | 0.95 | 312 | 12 | 57 | 2.5 | 15 | 0.5 | 37 | 25 |
| SM-WR7 | | 6/23/2004 | 3.8 | 268 | 5630 | 1150 | 111 | 1 | 0.7 | 8 | NA | NA | 59 | 10500 | 226000 | 5.74 | 442 | 30 | 788 | 20 | 20 | 0.25 | 19 | 151 |
| SM-WR3-1 | WR-3 | 6/22/2004 | 6.2 | 6 | 18600 | 30 | 27.6 | 0.3 | 2.5 | 16 | NA | NA | 7 | 5520 | 46200 | 0.58 | 1190 | 5 | 16 | 5 | 25 | 1.5 | 16.2 | 200 |
| SM-WR3-2 | | 6/22/2004 | 7.2 | 1.7 | 15100 | 5 | 30.7 | 0.2 | 0.5 | 13 | NA | 0.405 | 7 | 2740 | 38500 | 1.34 | 1070 | 3 | 3 | 1 | 5 | 0.25 | 13.4 | 70 |
| SM-WR3-3 | | 6/23/2004 | 7.1 | 0.015 | 12400 | 0.15 | 63.4 | 0.2 | 0.025 | 12 | NA | NA | 13 | 6240 | 37800 | 0.7 | 738 | 0.0 | 0.11 | 2.5 | 0.25 | 0.13 | 29.8 | 0.5 |
| SM-WR4 | WR-4 | 6/22/2004 | 5.7 | 6.3 | 22400 | 41 | 31.7 | 0.4 | 0.8 | 21 | NA | 25.9 | 19 | 18500 | 61600 | 0.63 | 1400 | 23 | 248 | 4 | 1 | 0.3 | 44.5 | 189 |
| SM-WR5-1 | WR-5 | 6/21/2004 | 7.3 | 11.3 | 6200 | 133 | 16.1 | 1 | 1.6 | 26 | NA | 0.408 | 7 | 883000 | 84000 | 0.44 | 884 | 20 | 84.2 | 400 | 3 | 0.22 | 17 | 152 |
| SM-WR6-1 | WR-6 | 6/21/2004 | 5.3 | 3.31 | 18200 | 27.4 | 26.7 | 0.3 | 0.3 | 21 | NA | 0.3805 | 16 | 10500 | 43800 | 0.4 | 966 | 30 | 14.2 | 5 | 0.5 | 0.22 | 35.9 | 94 |
| SM-WR6-2 | | 6/22/2004 | 3.3 | 7.36 | 4170 | 62.8 | 8.4 | 1 | 0.37 | 2.5 | NA | NA | 5 | 6280 | 94000 | 1.41 | 92 | 6 | 29.0 | 7 | 1.9 | 0.14 | 8 | 30 |
| SM-WR6-3 | | 6/22/2004 | 5.9 | 6.71 | 15500 | 28.5 | 31.0 | 0.2 | 0.6 | 16 | NA | NA | 14 | 12100 | 40000 | 0.28 | 708 | 20 | 14.8 | 5 | 0.25 | 0.18 | 29.2 | 79 |
| | | minimum = | 2.9 | 0.015 | 4170 | 0.15 | 8.4 | 0.1 | 0.025 | 2.5 | NA | 0.38 | 5 | 2420 | 16700 | 0.025 | 92 | 0.0 | 0.11 | 1 | 0.25 | 0.13 | 8 | 0.5 |
| | | **MDC =** | **7.4** | **268** | **22400** | **1150** | **111** | **1.0** | **5.0** | **26** | **NA** | **104** | **59** | **883000** | **226000** | **5.7** | **1400** | **30** | **788** | **400** | **50** | **2.5** | **45** | **1078** |
| | | average = | 5.6 | 37 | 12419 | 126 | 44 | 0.4 | 1.5 | 13 | NA | 22 | 16 | 63197 | 60765 | 1.0 | 693 | 14 | 140 | 30 | 14 | 0.7 | 27 | 153 |
| | | 95% UCL = | | 83 | 14472 | 782 | 55 | 0.6 | 2.6 | 15 | NA | 145 | 21 | 584395 | 80999 | 1.7 | 841 | 18 | 280 | 261 | 26 | 2.7 | 31 | 265 |
| | | # of samples = 17; Standard Deviation = | | 65 | 4703 | 264 | 26 | 0.3 | 1.5 | 6 | NA | 37 | 12 | 205131 | 46794 | 1.3 | 339 | 9.1 | 203 | 93 | 16 | 0.8 | 10 | 237 |
| | | Frequency detected = | | 94% | 100% | 94% | 100% | 35% | 47% | 94% | **NA** | 40% | 100% | 100% | 100% | 94% | 100% | 53% | 100% | 18% | 29% | 53% | 100% | 71% |
| **Human Health Screening Criteria** | | | | | | | | | | | | | | | | | | | | | | | | |
| WDOE MTCA Method A Industrial Soil Cleanup Levels – Human Receptors (WDOE 2001b) | | | | NS | NS | 20 | NS | NS | 2 | NS | 2000 | 19 | 19 | NS | NS | 2 | NS | NS | 1000 | NS | NS | NS | NS | NS |
| EPA Region IX Industrial Soil PRGs (EPA 2004a) | | | | 5100 | 100000 | 1.6 | 67000 | 1900 | 450 | 1900 | 100000 | 30 | 450 | 41000 | 100000 | 310 | 19000 | 20000 | 800 | 410 | 5100 | 67 | 1000 | 100000 |
| **Ecological Screening Criteria** | | | | | | | | | | | | | | | | | | | | | | | | |
| WDOE MTCA Ecological Indicator Soil Concentrations for Protection of Terrestrial Plants and Animals (WDOE 2001c) | | | | 2 | 50 | NS | 102 | 10 | 4 | 20 | NS | NS | 42 | 50 | NS | 0.1 | 1100 | 30 | 50 | 5 | 0.3 | 1 | 2 | 86 |
| EPA Ecological Soil Screening Levels (Eco-SSLs) (EPA 2005b) | | | | NS | NS | 18 | 330 | 21 | 0.36 | 13 | 26 | 81 | NS | NS | NS | NS | NS | NS | 11 | 0.27 | NS | NS | 7.8 | NS |
| ORNL Soil PRGs for Ecological Endpoints (Efroymson et al. 1997) | | | | 2 | NS | 9.9 | 283 | 10 | 4 | 20 | NS | NS | 0.4 | 60 | NS | 0.00051 | NS | 30 | 40.5 | 5 | 0.21 | 1 | 2 | 8.5 |

Notes:

Result below method detection limit, reported at 1/2 reporting limit
Result between method detection limit and practical quantitation limit, reported at detected concentration
Ecological screening criteria exceeded
Human health screening criteria exceeded

EPA = U.S. Environmental Protection Agency
MDC = Maximum detected concentration
MTCA = Model Toxics Control Act
NA = Not analyzed for
NS = No standard
ORNL = Oak Ridge National Laboratory
PRG = Preliminary remediation goal
UCL = Upper confidence level
WDOE = Washington Department of Ecology
mg/kg = Milligram per kilogram

**Table 3. Background Soil Analytical Results Summary**
**Sunset Mine and Millsite**

| | | | Analyte Concentration (mg/kg) | | | | | | | | | | | | | | | | | | | | | | | | | | |
|---|---|---|---|---|---|---|---|---|---|---|---|---|---|---|---|---|---|---|---|---|---|---|---|---|---|---|---|---|---|
| **Sample ID** | **Date Collected** | **pH** | **Ca** | **K** | **Mg** | **Na** | **Ag** | **Al** | **$As_3$** | **$As_5$** | **$As_T$** | **Ba** | **Be** | **Cd** | **Co** | **$Cr_3$** | **$Cr_6$** | **$Cr_T$** | **Cu** | **Fe** | **Hg** | **Mn** | **Ni** | **Pb** | **Sb** | **Se** | **Tl** | **V** | **Zn** |
| SM-BGS-1 | 6/21/2004 | 5 | 1530 | 405 | 2830 | 130 | 0.73 | 15400 | 0.024 | 12.35 | 12.4 | 52.1 | 0.2 | 0.4 | 5 | 14.91 | 0.544 | 16 | 291 | 15500 | 0.06 | 142 | 11.8 | 7.5 | 0.1 | 0.5 | 0.025 | 38 | 114 |
| SM-BGS-2 | 6/21/2004 | 5.5 | 2490 | 720 | 6650 | 170 | 0.11 | 16900 | 0.062 | 7.54 | 7.6 | 143 | 0.1 | 0.52 | 10 | 16.04 | 0.482 | 17 | 121 | 18800 | 0.02 | 247 | 18.1 | 5.62 | 0.1 | 0.25 | 0.015 | 43.4 | 126 |
| SM-BGS-3 | 6/21/2004 | 5.3 | 2840 | 350 | 3140 | 160 | 0.3 | 11600 | 0.049 | 12.95 | 13 | 53.6 | 0.1 | 0.7 | 6 | 9.93 | 0.536 | 11 | 631 | 13700 | 0.1 | 341 | 9 | 13.1 | 0.5 | 2.5 | 0.15 | 31.7 | 70 |
| | minimum = | 5 | 1530 | 350 | 2830 | 130 | 0.11 | 11600 | 0.024 | 7.5 | 7.6 | 52 | 0.1 | 0.4 | 5 | 10 | 0.482 | 11 | 121 | 13700 | 0.02 | 142 | 9 | 5.6 | 0.1 | 0.25 | 0.02 | 32 | 70 |
| | **MDC =** | **5.5** | **2840** | **720** | **6650** | **170** | **0.73** | **16900** | **0.062** | **13** | **13** | **143** | **0.2** | **0.7** | **10** | **16** | **0.544** | **17** | **631** | **18800** | **0.10** | **341** | **18** | **13** | **0.5** | **2.5** | **0.15** | **43** | **126** |
| | average[a] = | 5.3 | 2287 | 492 | 4207 | 153 | 0.63 | 14633 | 0.045 | 11 | 11 | 83 | 0.1 | 0.54 | 7 | 14 | 0.521 | 15 | 348 | 16000 | 0.06 | 243 | 13 | 9 | 0.2 | 1.1 | 0.06 | 38 | 103 |
| | # of samples = 3; Standard Deviation = | | 554 | 163 | 1732 | 17 | 0.26 | 2231 | 0.016 | 2.4 | 2.4 | 43 | 0.05 | 0.12 | 2 | 3 | 0.027 | 2.6 | 212 | 2112 | 0.03 | 81 | 3.8 | 3.2 | 0.2 | 1.0 | 0.06 | 5 | 24 |
| | Frequency detected = | | 100% | 100% | 100% | 100% | 100% | 100% | 67% | 100% | 100% | 100% | 33% | 100% | 100% | 100% | 0% | 100% | 100% | 100% | 67% | 100% | 100% | 100% | 33% | 0% | 0% | 100% | 100% |
| **Human Health Screening Criteria** | | | | | | | | | | | | | | | | | | | | | | | | | | | | | |
| WDOE MTCA Method A Industrial Soil Cleanup Levels – Human Receptors (WDOE 2001b) | | | NS | NS | NS | NS | 20 | NS | NS | 2 | NS | 2000 | 19 | 19 | NS | NS | 2 | NS | NS | 1000 | NS | NS | NS | NS | NS | | | | |
| EPA Region IX Industrial Soil PRGs (EPA 2004a) | | | 5100 | 100000 | NS | NS | 1.6 | 67000 | 1900 | 450 | 1900 | 100000 | 30 | 450 | 41000 | 100000 | 310 | 19000 | 20000 | 800 | 410 | 5100 | 67 | 1000 | 100000 | | | | |
| **Ecological Screening Criteria** | | | | | | | | | | | | | | | | | | | | | | | | | | | | | |
| WDOE MTCA Ecological Indicator Soil Concentrations for Protection of Terrestrial Plants and Animals (WDOE 2001c) | | | 2 | 50 | 7 | 10 | NS | 102 | 10 | 4 | 20 | NS | NS | 42 | 50 | NS | 0.1 | 1100 | 30 | 50 | 5 | 0.3 | 1 | 2 | 86 | | | | |
| EPA Ecological Soil Screening Levels (Eco-SSLs) (EPA 2005b) | | | NS | NS | NS | NS | 18 | 330 | 21 | 0.36 | 13 | 26 | 81 | NS | NS | NS | NS | NS | NS | 11 | 0.27 | NS | NS | 7.8 | NS | | | | |
| ORNL Soil PRGs for Ecological Endpoints (Efroymson et al. 1997) | | | 2 | NS | NS | NS | 9.9 | 283 | 10 | 4 | 20 | NS | NS | 0.4 | 60 | NS | 0.00051 | NS | 30 | 40.5 | 5 | 0.21 | 1 | 2 | 8.5 | | | | |

Notes:

Result below method detection limit, reported at 1/2 reporting limit
Result between method detection limit and practical quantitation limit, reported at detected concentration
Calculated value
Ecological screening criteria exceeded
Human health screening criteria exceeded

[a]95 Percent upper confidence levels not computed because fewer than four samples.
EPA = U.S. Environmental Protection Agency
MDC = Maximum detected concentration
MTCA = Model Toxics Control Act
NS = No standard
ORNL = Oak Ridge National Laboratory
PRG = Preliminary remediation goal
WDOE = Washington Department of Ecology
mg/kg = Milligram per kilogram

**Table 4. Surface Water Analytical Results Summary**
**Sunset Mine and Millsite**

| Sample ID | Date Collected | Analyte Concentration (µg/L)[a] | | | | | | | | | | | | | | | | | | | | | | |
|---|---|---|---|---|---|---|---|---|---|---|---|---|---|---|---|---|---|---|---|---|---|---|---|---|
| | | Ag | Al | $As_3$ | $As_5$ | $As_T$ | Ba | Be | Cd | Co | $Cr_3$ | $Cr_6$ | $Cr_T$ | Cu | Fe | Hg | Mn | Ni | Pb | Sb | Se | Tl | V | Zn |
| TC-SW1 (background) | 6/22/2004 | 0.05 | 50 | 0.059 | 0.2 | 0.2 | 3 | 1 | 0.1 | 5 | 5 | 0.5 | 5 | 0.5 | 20 | 0.00046 | 2.5 | 5 | 0.4 | 0.2 | 0.1 | 0.4 | 2.5 | 5 |
| **NFSR[c]:** | | | | | | | | | | | | | | | | | | | | | | | | |
| NFSR-SW1 | 6/23/2004 | 0.05 | 40 | 0.083 | 0.62 | 0.7 | 5 | 1 | 0.05 | 5 | 5 | 0.5 | 5 | 0.5 | 30 | 0.00043 | 2.5 | 5 | 0.05 | 0.1 | 0.05 | 0.05 | 2.5 | 5 |
| NFSR-SW2 | 6/23/2004 | 0.05 | 50 | 0.081 | 0.62 | 0.7 | 5 | 1 | 0.05 | 5 | 5 | 0.5 | 5 | 0.5 | 20 | 0.00041 | 2.5 | 5 | 0.05 | 0.1 | 0.05 | 0.2 | 2.5 | 5 |
| **Site:** | | | | | | | | | | | | | | | | | | | | | | | | |
| TC-SW2 | 6/22/2004 | 0.05 | 40 | 0.066 | 0.1 | 0.2 | 3 | 1 | 0.05 | 5 | 5 | 0.5 | 5 | 1 | 5 | 0.00037 | 2.5 | 5 | 0.1 | 0.1 | 0.05 | 0.05 | 2.5 | 5 |
| TC-SW3 | 6/23/2004 | 0.05 | 30 | 0.083 | 0.1 | 0.2 | 3 | 1 | 0.05 | 5 | 5 | 0.5 | 5 | 0.8 | 10 | 0.00043 | 2.5 | 5 | 0.05 | 0.1 | 0.05 | 0.05 | 2.5 | 5 |
| SM-AS1 | 6/22/2004 | 0.025 | 50 | 0.0035 | 0.7 | 0.7 | 11 | 1 | 0.1 | 5 | 5 | 0.5 | 5 | 126 | 5 | 0.00384 | 2.5 | 5 | 0.05 | 2.4 | 0.5 | 0.025 | 2.5 | 5 |
| SM-AS2-1 | 6/22/2004 | 0.07 | 30 | 0.03 | 3.1 | 3.1 | 18 | 1 | 0.1 | 5 | 5 | 0.5 | 5 | 90.7 | 10 | 0.00391 | 2.5 | 5 | 0.05 | 0.5 | 0.5 | 0.025 | 2.5 | 5 |
| SM-AS2-2 | 6/22/2004 | 0.26 | 270 | 0.131 | 3.2 | 3.3 | 20 | 1 | 0.1 | 5 | 5 | 0.5 | 5 | 212 | 380 | 0.00604 | 13 | 5 | 2.8 | 0.6 | 0.5 | 0.025 | 2.5 | 5 |
| minimum (excluding BG) = | | 0.025 | 30 | 0.0035 | 0.1 | 0.2 | 3 | 1 | 0.05 | 5 | 5 | 0.5 | 5 | 0.8 | 5 | 0.00037 | 2.5 | 5 | 0.05 | 0.1 | 0.05 | 0.025 | 2.5 | 5 |
| **MDC (excluding BG) =** | | **0.26** | **270** | **0.131** | **3.2** | **3.3** | **20** | **1** | **0.1** | **5** | **5** | **0.5** | **5** | **212** | **380** | **0.00604** | **13** | **5** | **2.8** | **2.4** | **0.5** | **0.05** | **2.5** | **5** |
| average (excluding BG) = | | 0.09 | 84 | 0.06 | 1.4 | 1.5 | 11 | 1 | 0.08 | 5 | 5 | 0.5 | 5 | 86 | 82 | 0.0029 | 4.6 | 5 | 0.61 | 0.7 | 0.3 | 0.04 | 2.5 | 5 |
| 95% UCL = | | 0.27 | 278 | 0.11 | 3.0 | 3.0 | 19 | 1 | 0.11 | 5 | 5 | 0.5 | 5 | 171 | 823 | 0.0053 | 13.8 | 5 | 6.1 | 3.4 | 1.4 | 0.05 | 2.5 | 5 |
| # of samples = 8; Standard Deviation = | | 0.07 | 81 | 0.04 | 1.2 | 1.2 | 7 | 0.0 | 0.02 | 0.0 | 0.0 | 0.0 | 0.0 | 78 | 129 | 0.0022 | 3.7 | 0.0 | 1.0 | 0.8 | 0.2 | 0.06 | 0.0 | 0.0 |
| Frequency detected = | | 25% | 100% | 88% | 63% | 88% | 88% | 0% | 38% | 0% | 0% | 0% | 0% | 75% | 75% | 100% | 13% | 0% | 38% | 38% | 0% | 25% | 0% | 0% |
| **Human Health Screening Criteria** | | | | | | | | | | | | | | | | | | | | | | | | |
| 1a - Wash HH | | NS | NS | NS | NS | 0.018 | NS | NS | NS | NS | NS | NS | NS | NS | NS | 0.14 | NS | 610 | NS | 14 | 170 | 1.7 | NS | NS |
| 1b - Wash HH | | 100 | NS | NS | NS | 10 | 2000 | 4 | 5 | NS | NS | NS | 100 | 1300 | 300 | 2 | 50 | 100 | 15 | 6 | NS | 2 | NS | 5000 |
| 2- EPA HH | | NS | NS | NS | NS | 0.018 | 1000 | NS | NS | NS | NS | NS | NS | 1300 | 300 | NS | 50 | 610 | NS | 5.6 | 170 | 0.24 | NS | 7400 |
| **Ecological Screening Criteria** | | | | | | | | | | | | | | | | | | | | | | | | |
| 3- Wash Eco[b] | | NS | NS | NS | NS | 190 | NS | NS | 0.13 | NS | 18.0 | 10 | NS | 1.03 | NS | 0.012 | NS | 15 | 0.11 | NS | 5 | NS | NS | 10 |
| 4- EPA Eco[b] | | 0.36 | NS | NS | 3.1 | 150d | 4 | 0.66 | 0.03 | 23 | 27 | 11d | NS | 1 | 1000 | 0.77d | 120 | 5 | 0.1 | 30 | 5 | 12 | 20 | 11 |
| 5 -ORNL Eco | | 0.36 | 87 | 0.19 | 0.0031 | 3.1 | 4 | 0.66 | 0.00015 | 23 | NS | 0.002 | 2 | 0.23 | 158 | 0.23 | 120 | 160 | 0.66 | 30 | 0.39 | 9 | 20 | 30 |

| Sample ID | Flow (cfs) (6-22-04) | pH | Analyte Concentration (mg/L)[a] | | | | | |
|---|---|---|---|---|---|---|---|---|
| | | | Ca | Hard | K | Mg | Na | Sulfate |
| TC-SW1 (background) | 120 | 7.8 | 1.8 | 6 | 0.15 | 0.3 | 0.7 | 5 |
| **NFSR[c]:** | | | | | | | | |
| NFSR-SW1 | -- | 7.0 | 3.1 | 10 | 0.4 | 0.5 | 1.6 | 5 |
| NFSR-SW2 | -- | 7.0 | 2.5 | 8 | 0.3 | 0.5 | 1.3 | 5 |
| **Site:** | | | | | | | | |
| TC-SW2 | -- | 6.8 | 1.8 | 6 | 0.15 | 0.3 | 0.6 | 5 |
| TC-SW3 | -- | 6.8 | 1.8 | 6 | 0.15 | 0.3 | 0.6 | 5 |
| SM-AS1 | 0.01 | 7.3 | 9.8 | 29 | 0.4 | 1.0 | 1.4 | 10 |
| SM-AS2-1 | 0.71 | 7.6 | 20.4 | 61 | 0.7 | 2.5 | 2.8 | 20 |
| SM-AS2-2 | -- | 7.6 | 20 | 61 | 0.8 | 2.6 | 2.7 | 20 |
| min (excluding BG) = | | 6.8 | 1.8 | 6 | 0.15 | 0.3 | 0.6 | 5 |
| **MDC (excluding BG) =** | | **7.6** | **20.4** | **61** | **0.8** | **2.6** | **2.8** | **20** |
| avg (excluding BG) = | | 7.2 | 11 | 32.6 | 0.4 | 1.3 | 1.6 | 12.0 |
| 95% UCL = | | | 19.7 | | 0.7 | 2.4 | 2.6 | |
| Frequency detected = | | | 100% | | 63% | 100% | 100% | 38% |

µg/L = Microgram per liter
mg/L = Milligram per liter
cfs = cubic feet per second

Notes:

- Result below method detection limit, reported at 1/2 reporting limit
- Result between method detection limit and practical quantitation limit, reported at detected concentration
- Calculated value
- Ecological screening criteria exceeded
- Human health screening criteria exceeded

[a]Total concentrations
[b]Screening criteria for hardness dependent metals are based on a average hardness of 28.5 and were converted to total concentrations where applicable.
[c]Samples from NF Skykomish River were not included with samples from the site in determining minimum, maximum, and average concentrations.

avg = average; min = minimum
BG = Background
EPA = U.S. Environmental Protection Agency
MDC = Maximum detected concentration
NFSR = North Fork Skykomish River
NOAA = National Oceanic and Atmospheric Administration
NS = No standard
ORNL = Oak Ridge National Laboratory
UCL = Upper confidence limit
WSDH = Washington State Department of Health

1a-State of Washington ambient water quality criteria for protection of human health (WDOE 2001d)
1b-State of Washington drinking water standards, WAC 246-290-310 (WSDH 2006)
2-EPA recommended chronic ambient water quality criteria for human consumption of water and fish (EPA 2004c)
3-State of Washington ambient water quality criteria for protection of aquatic life, chronic criterion (WDOE 2003a)
4-EPA recommended chronic ambient water quality criteria for freshwater aquatic life (EPA 2004c); if none existed then used Tier II secondary chronic values (NOAA 1999)
5-ORNL Ecological screening levels for freshwater, lowest chronic value (Suter & Tsao 1996)

**Table 5. Sediment Analytical Results Summary**
**Sunset Mine and Millsite**

| Sample ID | Date Collected | TOC (%) | Analyte Concentration (mg/kg) | | | | | | | | | | | | | | | | | | | | | | | | | | | |
|---|---|---|---|---|---|---|---|---|---|---|---|---|---|---|---|---|---|---|---|---|---|---|---|---|---|---|---|---|---|---|
| | | | Ca | K | Mg | Na | CN | Ag | Al | $As_3$ | $As_5$ | $As_T$ | Ba | Be | Cd | Co | $Cr_3$ | $Cr_6$ | $Cr_T$ | Cu | Fe | Hg | Mn | Ni | Pb | Sb | Se | Tl | V | Zn |
| TC-SS-1 (background) | 6/22/2004 | 0.3 | 2640 | 1270 | 5660 | 310 | 0.2 | 0.68 | 11100 | 0.021 | 7.66 | 7.7 | 69.2 | 0.1 | 0.36 | 7 | NA | NA | 20 | 83.6 | 17500 | 0.025 | 475 | 17.4 | 9.96 | 0.1 | 0.3 | 0.07 | 33.5 | 85 |
| **NFSR[a]:** | | | | | | | | | | | | | | | | | | | | | | | | | | | | | | |
| NFSR-SS-1 | 6/23/2004 | 0.2 | 2910 | 1090 | 6230 | 300 | NA | 0.1 | 10800 | 0.017 | 35.4 | 35.4 | 43.7 | 0.1 | 0.36 | 8 | NA | NA | 18 | 44.8 | 19300 | 0.02 | 286 | 16.7 | 10.3 | 0.5 | 0.3 | 0.06 | 39.2 | 73 |
| **Site:** | | | | | | | | | | | | | | | | | | | | | | | | | | | | | | |
| TC-SS-2 | 6/22/2004 | 0.3 | 2600 | 1500 | 7780 | 260 | 0.2 | 0.17 | 11800 | 0.019 | 7.76 | 7.8 | 79.9 | 0.1 | 0.26 | 9 | NA | NA | 22 | 109 | 21300 | 0.025 | 548 | 27.8 | 6.4 | 0.3 | 0.3 | 0.07 | 40.7 | 92 |
| TC-SS-3 | 6/22/2004 | 0.4 | 2940 | 1680 | 6480 | 300 | 0.2 | 0.07 | 11800 | 0.018 | 7.17 | 7.2 | 67.2 | 0.1 | 0.31 | 8 | NA | NA | 21 | 102 | 21600 | 0.02 | 555 | 20.6 | 7.96 | 0.2 | 0.3 | 0.08 | 38.9 | 77 |
| minimum (excluding BG) = | | 0.3 | 2600 | 1500 | 6480 | 260 | 0.2 | 0.07 | 11800 | 0.0175 | 7.17 | 7.2 | 67.2 | 0.1 | 0.26 | 8 | NA | NA | 21 | 102 | 21300 | 0.02 | 548 | 20.6 | 6.4 | 0.2 | 0.25 | 0.07 | 38.9 | 77 |
| **MDC (excluding BG) =** | | **0.4** | **2940** | **1680** | **7780** | **300** | **0.2** | **0.17** | **11800** | **0.019** | **7.76** | **7.8** | **79.9** | **0.1** | **0.31** | **9** | **NA** | **NA** | **22** | **109** | **21600** | **0.025** | **555** | **27.8** | **7.96** | **0.3** | **0.25** | **0.08** | **40.7** | **92** |
| average (excluding BG) = | | 0.4 | 2770 | 1590.0 | 7130.0 | 280 | 0.2 | 0.12 | 11800 | 0.0 | 7.5 | 7.5 | 73.6 | 0.1 | 0.29 | 8.5 | NA | NA | 22 | 106 | 21450 | 0.023 | 552 | 24.2 | 7.2 | 0.3 | 0.25 | 0.08 | 39.8 | 85 |
| 95% UCL[b] = | | | | | | | | | | | | | | | | | NA | NA | | | | | | | | | | | | |
| # of samples = 4; Standard Deviation = | | | 154 | 247 | 679 | 19 | 0.0 | 0.0 | 471 | 0.001 | 13 | 13 | 15 | 0.0 | 0.04 | 0.5 | NA | NA | 1.7 | 29 | 1021 | 0.002 | 125 | 4.6 | 1.6 | 0.1 | 0.0 | 0.0 | 0.8 | 8 |
| Frequency detected = | | 100% | 100% | 100% | 100% | 100% | 0% | 100% | 100% | 25% | 100% | 100% | 100% | 0% | 100% | 100% | NA | NA | 100% | 100% | 100% | 0% | 100% | 100% | 100% | 100% | 0% | 100% | 100% | 100% |
| **Human Health Screening Criteria** | | | | | | | | | | | | | | | | | | | | | | | | | | | | | | |
| WDOE MTCA Method A Industrial Soil Cleanup Levels – Human Receptors (WDOE 2001b) | | | NS | NS | NS | NS | 20 | NS | NS | 2 | NS | 2000 | 19 | 19 | NS | NS | 2 | NS | NS | 1000 | NS | NS | NS | NS | NS | NS | NS | NS | NS |
| EPA Region IX Industrial Soil PRGs (EPA 2004a) | | | 5100 | 100000 | NS | NS | 1.6 | 67000 | 1900 | 450 | 1900 | 100000 | 30 | 450 | 41000 | 100000 | 310 | 19000 | 20000 | 800 | 410 | 5100 | 67 | 1000 | 100000 | | | | |
| **Ecological Screening Criteria** | | | | | | | | | | | | | | | | | | | | | | | | | | | | | | |
| State of Washington Development of Freshwater Sediment Quality Values (WDOE 2003b) - recommended only | | | 2.0 | NS | NS | NS | 20.0 | NS | NS | 0.6 | NS | NS | NS | 95.0 | 80.0 | NS | 0.5 | NS | 60.0 | 335 | 0.4 | NS | NS | NS | 140 | | | | |
| State of Washington Development of Freshwater Sediment Quality Values (WDOE 2002) - in development | | | 3.9 | NS | NS | NS | 5.9 | NS | NS | 0.6 | NS | NS | NS | 26.0 | 16.0 | NS | 0.17 | NS | 16.0 | 31.0 | 35.0 | NS | NS | NS | 110 | | | | |
| EPA Threshold Effects Level (NOAA 1999) | | | NS | NS | NS | NS | 5.9 | NS | NS | 0.596 | NS | NS | NS | 37.3 | 35.7 | NS | 0.174 | NS | 18 | 35 | NS | NS | NS | NS | 123 | | | | |
| EPA Freshwater Probable Effects Level (NOAA 1999) | | | NS | NS | NS | NS | 17 | NS | NS | 3.53 | NS | NS | NS | 90 | 197 | NS | 0.486 | NS | 35.9 | 91.3 | NS | NS | NS | NS | 315 | | | | |
| ORNL PRGs for Ecological Endpoints, Sediment (Efroymson et al. 1997) | | | 1.8 | NS | NS | NS | 42 | NS | NS | 4.2 | NS | NS | NS | 159 | 77.7 | NS | 0.7 | NS | 38.5 | 110 | NS | NS | NS | NS | 270 | | | | |

Notes:

Result below method detection limit, reported at 1/2 reporting limit
Result between method detection limit and practical quantitation limit, reported at detected concentration
Calculated value
Ecological screening criteria exceeded
Human health screening criteria exceeded

[a]Samples from NF Skykomish River were not included with samples from the site in determining minimum, maximum, and average concentrations.
[b]95 Percent upper confidence levels not computed because fewer than four samples.
BG = Background
EPA = U.S. Environmental Protection Agency
MDC = Maximum detected concentration
MTCA = Model Toxics Control Act
NA = Not analyzed for
NFSR = North Fork Skykomish River
NOAA = National Oceanic and Atmospheric Administration
NS = No standard
ORNL = Oak Ridge National Laboratory
PRG = Preliminary remediation goal
UCL = Upper confidence limit
WDOE = Washington Department of Ecology
mg/kg = Milligram per kilogram

**Table 6. Pore Water Analytical Results Summary**
**Sunset Mine and Millsite**

| Sample ID | Date Collected | Analyte Concentration (µg/L)[a] | | | | | | | | | | | | | | | | | | | | | | |
|---|---|---|---|---|---|---|---|---|---|---|---|---|---|---|---|---|---|---|---|---|---|---|---|---|
| | | Ag | Al | $As_3$ | $As_5$ | $As_T$ | Ba | Be | Cd | Co | $Cr_3$ | $Cr_6$ | $Cr_T$ | Cu | Fe | Hg | Mn | Ni | Pb | Sb | Se | Tl | V | Zn |
| TC-PW1 (background) | 6/22/2004 | 0.025 | 15 | 0.045 | 0.26 | 0.3 | 4 | 1 | 0.05 | 5 | 5 | 0.01 | 5 | 0.7 | 5 | 0.00041 | 2.5 | 5 | 0.05 | 0.1 | 0.05 | 0.025 | 2.5 | 5 |
| **NFSR[d]:** | | | | | | | | | | | | | | | | | | | | | | | | |
| NFSR-PW1 | 6/23/2004 | 0.025 | 15 | 0.0035 | 0.89 | 0.9 | 5 | 1 | 0.05 | 5 | 5 | 0.01 | 5 | 1.1 | 5 | 0.00068 | 2.5 | 5 | 0.05 | 0.1 | 0.05 | 0.025 | 2.5 | 5 |
| **Site:** | | | | | | | | | | | | | | | | | | | | | | | | |
| TC-PW2 | 6/22/2004 | 0.025 | 15 | 0.017 | 0.18 | 0.2 | 3 | 1 | 0.05 | 5 | 5 | 0.01 | 5 | 1.6 | 5 | 0.00061 | 2.5 | 5 | 0.05 | 0.1 | 0.05 | 0.025 | 2.5 | 5 |
| TC-PW3 | 6/23/2004 | 0.025 | 15 | 0.022 | 0.18 | 0.2 | 4 | 1 | 0.05 | 5 | 5 | 0.01 | 5 | 1.1 | 5 | 0.00052 | 2.5 | 5 | 0.05 | 0.1 | 0.05 | 0.025 | 2.5 | 5 |
| minimum (excluding BG) = | | 0.025 | 15 | 0.017 | 0.18 | 0.2 | 3 | 1 | 0.05 | 5 | 5 | 0.01 | 5 | 1.1 | 5 | 0.00052 | 2.5 | 5 | 0.05 | 0.1 | 0.05 | 0.025 | 2.5 | 5 |
| **MDC (excluding BG) =** | | **0.025** | **15** | **0.022** | **0.18** | **0.2** | **4** | **1** | **0.05** | **5** | **5** | **0.01** | **5** | **1.6** | **5** | **0.00061** | **2.5** | **5** | **0.05** | **0.1** | **0.05** | **0.025** | **2.5** | **5** |
| average (excluding BG) = | | 0.03 | 15 | 0.02 | 0.18 | 0.2 | 3.5 | 1 | 0.05 | 5 | 5 | 0.01 | 5 | 1.4 | 5 | 0.00056 | 2.5 | 5 | 0.05 | 0.1 | 0.05 | 0.025 | 2.5 | 5 |
| 95% UCL[c] = | | | | | | | | | | | | | | | | | | | | | | | | |
| # of samples = 4; Standard Deviation = | | 0.0 | 0.0 | 0.01 | 0.33 | 0.3 | 0.8 | 0.0 | 0.0 | 0.0 | 0.0 | 0.0 | 0.0 | 0.2 | 0.0 | 0.00007 | 0.0 | 0.0 | 0.0 | 0.0 | 0.0 | 0.0 | 0.0 | 0.0 |
| Frequency detected = | | 0% | 0% | 75% | 100% | 100% | 100% | 0% | 0% | 0% | 0% | 100% | 0% | 100% | 0% | 100% | 0% | 0% | 0% | 0% | 0% | 0% | 0% | 0% |
| **Ecological Screening Criteria** | | | | | | | | | | | | | | | | | | | | | | | | |
| 1- Wash Eco[b] | | NS | NS | NS | NS | 190 | NS | NS | 0.42 | NS | 63.7 | 10.4 | NS | 4.05 | NS | 0.012 | NS | 54.5 | 0.64 | NS | 5 | NS | NS | 36.6 |
| 2- EPA Eco[b] | | 0.36 | NS | NS | 3.1 | 150d | 4 | 0.66 | 0.10 | 23 | 26.5 | 11d | NS | 3.06 | 1000 | 0.77d | 120 | 18.0 | 0.63 | 30 | 5 | 12 | 20 | 40.8 |
| 3 -ORNL Eco | | 0.36 | 87 | 0.19 | 0.0031 | 3.1 | 4 | 0.66 | 0.00015 | 23 | NS | 0.002 | 2 | 0.23 | 158 | 0.23 | 120 | 160 | 0.66 | 30 | 0.39 | 9 | 20 | 30 |

| Sample ID | pH | Analyte Concentration (mg/L)[a] | | | | | | |
|---|---|---|---|---|---|---|---|---|
| | | Ca | Hard | K | Mg | Na | Sulfate | CN |
| TC-PW1 (background) | 9.7 | 1.7 | 5 | 0.15 | 0.3 | 0.7 | 10 | 0.005 |
| **NFSR[d]:** | | | | | | | | |
| NFSR-PW1 | 7.0 | 2.9 | 9 | 0.15 | 0.5 | 1.7 | 5 | NA |
| **Site:** | | | | | | | | |
| TC-PW2 | 7.7 | 1.7 | 5 | 0.15 | 0.2 | 0.7 | 5 | 0.005 |
| TC-PW3 | 7.1 | 2 | 5 | 0.15 | 0.2 | 0.7 | 5 | 0.005 |
| min (excluding BG) = | 7.1 | 1.7 | 5 | 0.15 | 0.2 | 0.7 | 5 | 0.005 |
| **max (excluding BG) =** | **7.7** | **1.7** | **5** | **0.15** | **0.2** | **0.7** | **5** | **0.005** |
| avg (excluding BG) = | 7.4 | 1.7 | 5 | 0.15 | 0.2 | 0.7 | 5 | 0.005 |
| 95% UCL[c] = | | | | | | | | |
| Frequency Detected = | | | 100% | 0% | 100% | 100% | 0% | 0% |

1-State of Washington ambient water quality criteria for protection of aquatic life, chronic criterion (WDOE 2003a)
2-EPA recommended chronic ambient water quality criteria for freshwater aquatic life (EPA 2004c); if none existed, used Tier II secondary chronic values (NOAA 1999).
3-ORNL Ecological screening levels for freshwater, lowest chronic value (Suter & Tsao 1996)
µg/L = Microgram per liter
mg/L = Milligram per liter

Notes:
Result below method detection limit, reported at 1/2 reporting limit
Result between method detection limit and practical quantitation limit, reported at detected concentration
Calculated value
Ecological screening criteria exceeded
[a]Dissolved concentrations
[b]Screening criteria for hardness dependent metals are based on a average hardness of 5.
[c]95 Percent upper confidence levels not computed because fewer than four samples.
[d]Samples from NF Skykomish River not included with samples from site in determining minimum, maximum, and average concentrations.
avg = average; min = minimum; max = maximum
BG = Background
EPA = U.S. Environmental Protection Agency
MDC = Maximum detected concentration
NA = Not analyzed for
NFSR = North Fork Skykomish River
NOAA = National Oceanic and Atmospheric Administration
NS = No standard
ORNL = Oak Ridge National Laboratory
UCL = Upper confidence limit
Wash = Washington
WDOE = Washington Department of Ecology

**Table 7. Summary of Waste Volumes and Selected Metal Concentrations**
**Sunset Mine EE/CA**

| Area | Location | Estimated Volume (cy) | Sample Analytical Results (mg/kg) | | | | | |
|---|---|---|---|---|---|---|---|---|
| | | | Antimony | | Arsenic | | Copper | |
| | | | MDC | AVG | MDC | AVG | MDC | AVG |
| BG | Background | | 0.5[a] | 0.2[a] | 13 | 11 | 631 | 348 |
| S1-S3 | Soil south of mill foundation | 90 | 10[a] | 5.3[a] | 60[b] | 31[a, b] | 24500 | 14473 |
| WR-1 | Waste Rock Pile 1 | 300 | 20[a] | 13.3[a] | 50 | 44.7[a] | 30900 | 20933 |
| WR-2 | Waste Rock Pile 2 | 10 | 20[b] | 10.8[a, b] | 1150 | 195 | 10500 | 7750 |
| WR-3 | Waste Rock Pile 3 | 800 | 5[a] | 2.8[a] | 15[a] | 6[a, b] | 6240 | 4833 |
| WR-4 | Waste Rock Pile 4 | 60 | 4[a] | 4[a] | 41 | 41 | 18500 | 18500 |
| WR-5 | Waste Rock Pile 5 | 300 | 400[a] | 400[a] | 133 | 133 | 883000 | 883000 |
| WR-6 | Waste Rock Pile 6 | 500 | 7[b] | 5.7[a] | 63 | 40 | 12100 | 9627 |
| **Total estimated waste rock volume =** | | **2060** | **cy** | | | | | |

Notes:
Data in this table represent analytical results of samples collected during the Site Inspection (CES 2005).
[a] Analytical result resported below the method detection limit (MDL); value = 1/2 reporting limit.
[b] Analytical result between the MDL and practical quantitation limit (PQL); value = detected concentration
AVG = Average
MDC = Maximum detected concentration
cy = Cubic yard (bank)
mg/kg = Milligram per kilogram

**Table 8. Surface Water Quality ARARs and Proposed Cleanup Criteria (total recoverable µg/L)**
**Sunset Mine EE/CA**

| Analyte | Apparent Background Concentration[a] | Maximum Detected Concentration | State of Washington | | Federal | | | | ORNL | Proposed Surface Water Cleanup Criteria |
|---|---|---|---|---|---|---|---|---|---|---|
| | | | WAC 173-201A | WAC 246-290 | Clean Water Act Section 304 | | National Toxics Rule 40 CFR 131.26 | | PRGs for Ecological Endpoints - Surface Water | |
| | | | Protection of Aquatic Life, Chronic[b,c] | Drinking Water Criteria | Human Health Consumption of Water+Organism | Freshwater Chronic[b] | Human Health Consumption of Water+Organism | Freshwater Chronic[b] | | |
| Aluminum | 50 | 270 | | | | | | | 87 | 87 |
| Arsenic | 0.2 | 3.3 | 190 | 10 | 0.018 | 150 | 0.018 | 190 | 3.1 | 10 |
| Barium | 3 | 20 | | 2000 | 1000 | | | | 4 | 4 |
| Beryllium | 1 | 1 | | 4 | | | | | 0.66 | 0.66 |
| Cadmium | 0.1 | 0.1 | 0.13 | 5 | | 0.03 | | 0.13 | 1.1 | 0.13 |
| Chromium | 5 | 5 | 10 | 100 | | 7 ($Cr^3$) | | 10 ($Cr^6$) | 11 | 10 |
| Copper | 0.5 | 212 | 1 | 1300 | 1300 | 1[d] | | 1 | 12 | 1 |
| Iron | 20 | 380 | | 300 | 300 | 1000 | | | 1000 | 300 |
| Lead | 0.4 | 2.8 | 0.11 | 15 | | 0.1 | | 0.1 | 3.2 | 0.11 |
| Selenium | 0.1 | 0.5 | 5 | | 170 | 5 | | 5 | 0.39 | 5 |

Notes:

Result below method detection limit, reported at 1/2 reporting limit

Result between method detection limit and practical quantitation limit, reported at detected concentration

µg/L = Microgram per liter

[a]Based on a single background sample from Trout Creek upstream of the site.

[b]Hardness dependent criteria adjusted based on an apparent background hardness of 6; also converted to total concentrations where applicable.

[c]For protection of human health, State of Washingon defaults to National Toxics Rule 40 CFR 131.26.

[d]The federal Aquatic Life Ambient Freshwater Quality Copper Criterion was revised in 2007 and is to be calculated using site-specific water quality parameters; however, there is insufficient site data available to calculate the criterion. Therefore, the 2006 criterion was used.

ARAR = Applicable or relevant and appropriate requirement

CFR = Code of Federal Regulations

ORNL = Oak Ridge National Laboratory

PRG = Preliminary Remediation Goal

WAC = Washington Administrative Code

**Table 9. Soil Quality ARARs and Proposed Cleanup Criteria (mg/kg)**
**Sunset Mine EE/CA**

| Analyte | Apparent Background Concentration[a] | Maximum Detected Concentration | State of Washington | | | Federal | ORNL | Human Health Risk-based Criteria[c] | Proposed Soil Cleanup Criteria |
|---|---|---|---|---|---|---|---|---|---|
| | | | WAC 173-340-740 | WAC 173-340-7492 | WAC 170-340-7493 | EPA | | | |
| | | | MTCA Method A Industrial Soil (Table 745-1) | Method B Unrestricted Land Use (Table 749-2) | Method B Ecological Receptor[b] (Table 749-3) | Region 9 PRGs - Industrial Soil | PRGs for Ecological Endpoints - Soil | | |
| Antimony | 0.2 | 400 | | | 5p | 410 | 5 | 252 | 252 |
| Arsenic | 11 | 1150 | 20 | 20 | 10p ($As^5$) | 1.6 | 9.9 | 41 | 41 |
| Cadmium | 0.54 | 5 | 2 | 25 | 4p | 450 | 4 | 456 | 456 |
| Chromium | 15 | 59 | 19 ($Cr^6$) | 42 | 42p,s | 450 | 0.4 | 841098 | 841098 |
| Copper | 348 | 883000 | | 100 | 50s | 41000 | 60 | 36573 | 36573 |
| Iron | 16000 | 226000 | | | | 100000 | | 307968 | 307968 |
| Lead | 9 | 788 | 1000 | 220 | 50p | 800 | 40.5 | | 1000 |
| Mercury | 0.06 | 5.7 | 2 | 9 | 0.1s | 310 | 0.0005 | 261 | 261 |

Notes:

Result below method detection limit, reported at 1/2 reporting limit

Result between method detection limit and practical quantitation limit, reported at detected concentration

mg/kg = Milligram per kilogram

[a]Based on three background soil samples.

[b]Lowest value selected from plant(p), soil biota(s), and wildlife(w) receptors

[c]From Sunset Mine Streamlined Human Health and Ecological Risk Assessment (MSE 2006). Values calculated using human health risk equations, site-specific exposure factors, and an allowable non-carcinogenic hazard index of 1 and a carcinogenic risk of 1.E-05.

ARAR = Applicable or relevant and appropriate requirement

EPA = U.S. Environmental Protection Agency

MTCA = Model Toxics Control Act

ORNL = Oak Ridge National Laboratory

PRG = Preliminary Remediation Goal

WAC = Washington Administrative Code

**Table 10. Sediment Quality ARARs and Proposed Cleanup Criteria (mg/kg)**
**Sunset Mine EE/CA**

| Analyte | Apparent Background Concentration[a] | Maximum Detected Concentration | State of Washington | | Federal | | ORNL | Human Health Risk-based Criteria[c] | Proposed Sediment Cleanup Criteria |
|---|---|---|---|---|---|---|---|---|---|
| | | | WDOE 2004 | WAC 173-204-320 | EPA/NOAA 1999 | | PRGs for Ecological Endpoints - Sediment | | |
| | | | Freshwater Sediment Quality Standards (Recommended Only) | Marine Sediment Management Standards[b] | Threshold Effects Level | Probable Effects Level | | | |
| Antimony | 0.1 | 0.3 | 0.4 | | | | | 7203 | 7203 |
| Arsenic | 7.7 | 7.8 | 20 | 57 | 5.9 | 17 | 42 | 132 | 132 |
| Cadmium | 0.36 | 0.31 | 0.6 | 5.1 | 0.596 | 3.53 | 4.2 | 1604 | 1604 |
| Chromium | 20 | 22 | 95 | 260 | 37.3 | 90 | 159 | 3079680 | 3079680 |
| Copper | 83.6 | 109 | 80 | 390 | 35.7 | 197 | 77.7 | 75315 | 75315 |
| Iron | 17500 | 21600 | | | | | | 615937 | 615937 |
| Lead | 9.96 | 7.96 | 335 | 450 | 35 | 91.3 | 110 | | 335 |
| Mercury | 0.025 | 0.025 | 0.5 | 0.41 | 0.174 | 0.486 | 0.7 | 13239 | 13239 |

Notes:

mg/kg = Milligram per kilogram

[a]Based on a single background sample collected from Trout Creek upstream of the site.

[b]For reference only - not applicable.

[c]From Sunset Mine Streamlined Human Health and Ecological Risk Assessment (MSE 2006). Values calculated using human health risk equations, site-specific exposure factors, and an allowable non-carcinogenic hazard index of 1 and a carcinogenic risk of 1.E-05.

ARAR = Applicable or relevant and appropriate requirement

EPA = U.S. Environmental Protection Agency

NOAA = National Oceanic and Atmospheric Administration

ORNL = Oak Ridge National Laboratory

PRG = Preliminary Remediation Goal

WAC = Washington Administrative Code

WDOE = Washington Department of Ecology

**Table 11. Summary of Areas Exceeding Risk-based Cleanup Levels**
**Sunset Mine EE/CA**

| Area | Contaminant | Risk-based Cleanup Level[a] | Maximum Detected Concentration | Average Concentration | Estimated Volume |
|---|---|---|---|---|---|
| Soil south of mill foundation (S-1 & S-3) | Arsenic | 41 mg/kg | **60** mg/kg | **55** mg/kg | 90 cy |
| Waste rock pile WR-1 | | | **60** mg/kg | **53** mg/kg | 300 cy |
| Waste rock pile WR-2 | | | **1150** mg/kg | **513** mg/kg | 10 cy |
| Waste rock pile WR-6 | | | **63** mg/kg | 40 mg/kg | 500 cy |
| Waste rock pile WR-5 | Antimony | 252 mg/kg | **400**[a] mg/kg | **400**[a] mg/kg | 300 cy |
| | Arsenic | 41 mg/kg | **133** mg/kg | **133** mg/kg | |
| | Copper | 365730 mg/kg | **883000** mg/kg | **883000** mg/kg | |

Notes:
[a] Risk-based values developed in the risk assessment using human health risk equations for the most sensitive receptor (child recreationalist) under the reasonable maximum exposure scenario and site-specific exposure factors (MSE 2006).

cy = Cubic yard (bank)

mg/kg = Milligram per kilogram

Bold results exceed risk-based cleanup levels

**Table 12. Removal Action Technology Screening Matrix**
**Sunset Mine EE/CA**

| Technology Class | Process Option | Description | Effective–ness | Implemen–tability | Cost | O&M | Land Impact | Pros | Cons | Retained? |
|---|---|---|---|---|---|---|---|---|---|---|
| **No Action** | | | | | | | | | | |
| No action | **No action** | Leave feature(s) as is | 0 | 0 | 0 | none | none | Cheap, easy | No risk reduction | **Yes** |
| **Institutional Controls** | | | | | | | | | | |
| Access restriction | **Barbed-wire fencing** | 3-strand barbed-wire fence around stopes and ventilation raise | Low | High | Low | Medium–subject to vandalism | Minimal | Simple | Only a mild impediment to access | **Yes** |
| | Chain-link fencing | 8-foot chain-link security fence around stopes and ventilation raise | Medium | Low | High | Medium–subject to vandalism | Visual contrast | Simple, more effective than barbed-wire | Difficult to install on steep, uneven slopes | No |
| | **Warning signs** | Signs posted at physical hazards to warn of potential risks | Low | High | Low | Medium–subject to vandalism | Minimal | Simple, more effective than barbed-wire | Difficult to install on steep, uneven slopes | No |
| | Road closure | Add locked gate on FR 6320 | Medium | High | Low | Medium–subject to vandalism | None | Cheap, easy | Prevents access to other areas, site hazards still accessible by foot | No |
| **Physical Hazards** | | | | | | | | | | |
| Access restriction | **Bat gate/Culvert** | Install bat gates or culverts in open adits | High | High | Low | Medium—subject to vandalism | None | Reduces ecoreceptor exposure; maintains bat habitat | Potential vandalism | **Yes** |
| | Backfill stopes and ventilation raise | Backfill stopes and ventilation raise | High | Medium | High | Low–subject to further subsidence | Moderate-requires tree felling and construction of access road | Eliminates physical hazard; may be able to use waste rock for fill material | Potential for future collapse; removes potential bat habitat | No |
| | Plug open adits and ventilation raise | Install polyurethane foam or concrete plug in addition to backfill and cover | Medium | Medium | Medium | Low–inspect vandalism | Minimal | Eliminates physical hazard | Removes potential bat habitat; access to upper workings difficult | No |
| | Cap ventilation raise | Install concrete cap over open ventilation raise | High | Medium | Medium | Low–inspect for sloughing around cap | Minimal | Eliminate physical hazard; not as prone to collapse | Not natural looking; eliminates potential bat habitat; access difficult | No |
| | **Remove or bury debris** | Remove scattered debris or bury on site | High | High | Low | None | Minimal | Cheap and easy, particularly for on-site disposal | Nearest landfill > 200 miles from the site; may require waste characterization | **Yes** |

**Table 12. Removal Action Technology Screening Matrix**
**Sunset Mine EE/CA**

| Technology Class | Process Option | Description | Effective–ness | Implemen–tability | Cost | O&M | Land Impact | Pros | Cons | Retained? |
|---|---|---|---|---|---|---|---|---|---|---|
| **Engineering Controls** | | | | | | | | | | |
| Water containment | Adit plug | Install polyurethane foam or concrete plug to stop discharges | Low | High | Low | Medium—inspect for leakage | None | Eliminates access and physical hazard | Prone to blowout due to increased head; may not block discharge | No |
| | Infiltration | Infiltration gallery to divert adit discharges to groundwater | Low | Low | Medium | Low–inspect for plugging | Significant area required to infiltrate up to 500 gpm | Removes contaminant source and exposure pathway at the surface | Unlikely to remove dissolved metals or affect solids precipitated upon air contact; groundwater probably too shallow due to proximity of Trout Creek | No |
| Surface controls | **Runoff diversion** | Use diversion channels to intercept surface water run on | Medium | High | Medium | Minimal; inspect for erosion | Low—channel | Reduce erosion and percolation of water through waste rock | Not independently effective | **Yes** |
| Solids containment | Soil evapo-transpiration cover | Soil cover designed to store precipitation until it evaporates | Low | Low | Medium | Low–inspect for erosion | <0.5 ac repository and topsoil stockpile | Simple design/installation | More applicable to arid/semi-arid climates; would require very thick soil cover | No |
| | **Geosynthetic cover** | Engineered multilayer cover with a synthetic liner (GCL or HDPE) | High | Medium | High | Low–inspect for erosion | | Eliminates infiltration through waste material | Must be installed/tested correctly | **Yes** |
| | **Clay cover** | Bentonite or composite clay geosynthetic cover + soil & seed | Low | Medium | Medium | High–clay subject to desication in semi-arid climate | | Nearly eliminate infiltration; more forgiving installation than geosynthetics | Clay prone to decomposition from desiccation and freeze/thaw (ITRC 2004) | **Yes** |
| | Biological cover | Add carbohydrate– or protein–based nutrient mixes to cover soil | Medium | High | Medium | Low–inspect for erosion | | Reduced leachate metals conc. (EPA 2000c) | Strongly depends on mixture; design parameters not developed (EPA 2000c) | No |
| | Cementitious cover | Fiber–reinforced concrete/mortar cover | High | Medium | High | Low–inspect for erosion | | Reduce leachate metals conc. | Subject to cracking; not natural looking | No |
| | Polyurethane grout | Spray cover of polyurethane grout to inhibit infiltration | Medium | Medium | Medium | Low–inspect for erosion | | Reduced infiltration, leachate metals conc. < MCLs (EPA 2000c); more plasticity than cement grouts | Long term stability unknown (EPA 2000c) | No |

**Table 12. Removal Action Technology Screening Matrix**
**Sunset Mine EE/CA**

| Technology Class | Process Option | Description | Effective–ness | Implemen–tability | Cost | O&M | Land Impact | Pros | Cons | Retained? |
|---|---|---|---|---|---|---|---|---|---|---|
| **Land Disposal** | | | | | | | | | | |
| On-site repository | **Constructed repository** | Excavate waste rock and place in on–site repository | High | High | Medium | Medium—inspect cap and analyze leachate; inspect reclaimed areas | <0.5 ac (reclaimed) | Eliminates or reduces direct exposure | Waste remains on site; potential for re-exposure | **Yes** |
| Off-site disposal | **RCRA landfill** | Excavate waste rock and dispose in RCRA–C landfill | High | High | High | Low–material hauled off site; inspect reclaimed areas | None | Eliminates direct exposure by removing waste from site | Risk of highway spills | **Yes** |
| **Treatment** | | | | | | | | | | |
| Solidification/ Stabilization | Stabilization | Inject waste rock with cement or other material to physically stabilize | Medium to High | High | Medium | Low–inspect for erosion/settling | Minimal for access to waste rock piles | Does not require waste excavation | Leaves waste in the 100-year flood plain | No |
| Vitrification | Vitrification | Heat waste rock >2800ºF to melt minerals | High | Low | High | Low–inspect for erosion/settling | Minimal for access to waste rock piles | Does not require waste excavation | Requires high energy source; high cost; leaves waste in floodplain | No |
| Washing | Washing | Excavate and wash waste rock with aqueous solution | Medium | Low | High | Low–inspect for erosion/settling | Minimal for access to waste rock piles and wash area | Reduces waste toxicity | Requires water source, significant waste handling; and chemical disposal | No |
| Settling pond | **Settling pond** | Construct settling pond to remove fines | Medium | High | Medium | Medium—excavate and dispose of sediments every few years | ~0.4 ac at 6 ft deep | Reduce sediment load to stream; use as pretreatment | Only reduces sediments and precipitates formed on air contact | **Yes** |
| Biotreatment | Anaerobic wetland | Downflow anaerobic wetland with wooden baffles | Low | Medium | High | Replace baffles and medium every 20yr | <0.1 ac | No pumps/motors; Less prone to freezing | Less effective in winter | No |
| | Aerobic wetland | Surface flow over gravel/organic layer | Medium | Medium | High | Dredge sediment, replace medium every 20yr | >2 ac | Passive systems are BPT under NPDES | Less effective in winter; requires large area for high flows | No |
| | SRB bioreactor | Series of buried trenches containing cobbles and organic matter (e.g., manure) | Medium | Low | High | Add methanol to reactivate carbon source (Tsukamoto & Miller 1999); sludge removal | ~20 ac | No pumps/motors; subsurface; not as prone to vandalism | Subject to freezing; requires very large area for high flows (EPA 2000c) | No |
| | Pyrolusite® | Limestone–filled beds inoculated with proprietary aerobic microorganism population (Allegheny Mineral Abatement) | Medium | Medium - requires pilot study | High | Remove clogging sludge | ~2 ac at 5 ft deep | Claims 99.97% Fe/Mn removal; success at one penna site (Milavec 2002); no pumps/motors | Severe clogging (Milavec 2005); requires carbon source (e.g., upstream wetland); subject to freezing | No |

**Table 12. Removal Action Technology Screening Matrix**
**Sunset Mine EE/CA**

| Technology Class | Process Option | Description | Effective-ness | Implemen-tability | Cost | O&M | Land Impact | Pros | Cons | Retained? |
|---|---|---|---|---|---|---|---|---|---|---|
| Reagent | **ViroMine™** | Custom blend of reagents applied via a flow through structure such as a permeable reactive barrier or gabion | High for select metals | Medium - requires pilot study | Low | Remove clogging sediment and reapply reagents | Unknown | High metal removal efficiency, potentially low maintenace | More suitable for low flow conditions, requires pilot study, may require large area because of high flows | **Yes** |

Notes:
ac = Acre
ft = Foot
gpm = Gallon per minute
yr = Year
GCL = Geosynthetic clay liner
HDPE = High density polyethylene
MCL = Maximum Contaminant Level
O&M = Operation and maintenance
SRB = Sulfate reducing bioreactor

**Table 13. Estimated Removal Action Cost Summary**
**Sunset Mine EE/CA**

| TASK | Description | Alternative 2 Cost | | Alternative 3 Cost | | | | Alternative 4 Cost | | | | Recommended Alternative |
|---|---|---|---|---|---|---|---|---|---|---|---|---|
| | | | | MDCs[a] | | AVG[b] | | | | | | |
| | | MDCs[a] | AVG[b] | Mill | Ridge | Mill | Ridge | Adit 1 Channel | Adit 2 Channel | Ponds | ViroMine™ | Cost |
| **Access Road Improvement** | | $5,000 | $5,000 | $5,000 | $5,000 | $5,000 | $5,000 | | | | | $5,000 |
| | subtotal = | **$5,000** | **$5,000** | **$5,000** | **$5,000** | **$5,000** | **$5,000** | | | | | **$5,000** |
| **Physical Hazards Mitigation** | Bat Culvert Installation | $5,000 | $5,000 | $5,000 | $5,000 | $5,000 | $5,000 | | | | | $5,000 |
| | Ventilation Raise Plugging | $3,000 | $3,000 | $3,000 | $3,000 | $3,000 | $3,000 | | | | | $3,000 |
| | Install Security Fencing Around Stopes | $2,300 | $2,300 | $2,300 | $2,300 | $2,300 | $2,300 | | | | | $2,300 |
| | Debris Removal | $1,289 | $1,289 | $1,289 | $1,289 | $1,289 | $1,289 | | | | | $1,287 |
| | subtotal = | **$11,589** | **$11,589** | **$11,589** | **$11,589** | **$11,589** | **$11,589** | | | | | **$11,586** |
| **Mine Waste Removal** | Construction of Access Road to Upper Workings | $110,617 | | $110,617 | $110,617 | | | | | | | |
| | Mine Waste and Contaminated Soil Excavation and Disposal | $121,068 | $45,921 | $26,271 | $29,395 | $10,703 | $13,629 | | | | | $10,703 |
| | Mill Foundation Demolition and Disposal | $83,856 | $83,856 | | $59,472 | | $59,472 | | | | | |
| | Mine Waste Area Reclamation | $69,087 | $36,044 | $66,651 | $16,224 | $14,777 | $9,026 | | | | | $14,777 |
| | Upper Access Road Reclamation | $31,861 | | $31,861 | $31,861 | | | | | | | |
| | Repository Preparation | | | | $11,935 | | $5,357 | | | | | |
| | Repository Cover Construction[c] | | | $69,516 | $35,223 | $52,743 | $16,298 | | | | | $54,176 |
| | subtotal = | **$416,488** | **$165,821** | **$304,916** | **$294,727** | **$78,223** | **$103,781** | | | | | **$79,657** |
| **Miscellaneous** | Staging Area Preparation | $2,000 | $2,000 | $500 | $500 | $500 | $500 | | | | | $500 |
| | Mobilization | $8,000 | $4,000 | $8,000 | $8,000 | $5,000 | $5,000 | | | | | $5,000 |
| | Temporary Erosion Control BMPs | $5,000 | $2,000 | $4,000 | $5,000 | $3,000 | $4,000 | | | | | $3,000 |
| | Install Diversion Channel Above Repository | | | $4,604 | $4,185 | $4,604 | $4,185 | | | | | $4,604 |
| | Install Temporary Fence Around Repository | | | $1,473 | $1,768 | $1,473 | $1,473 | | | | | $1,473 |
| | subtotal = | **$15,000** | **$8,000** | **$18,577** | **$19,453** | **$14,577** | **$15,158** | | | | | **$14,577** |
| **Adit 1 Channel Construction** | Construction | | | | | | | $2,000 | | | | $2,000 |
| | subtotal = | | | | | | | **$2,000** | | | | **$2,000** |
| **Adit 2 Channel Reconstruction** | Construction | | | | | | | | $17,555 | | | $17,555 |
| | subtotal = | | | | | | | | **$17,555** | | | **$17,555** |
| **Adit 2 Settling Ponds** | Construction | | | | | | | | | $32,651 | | |
| | subtotal = | | | | | | | | | **$32,651** | | |
| **Adit 2 ViroMine Passive Treatment System** | Construction | | | | | | | | | | $75,864 | |
| | subtotal = | | | | | | | | | | **$75,864** | |
| | **Removal Action Subtotal =** | **$448,077** | **$190,410** | **$340,082** | **$330,769** | **$109,389** | **$135,529** | **$2,000** | **$17,555** | **$32,651** | **$75,864** | **$130,376** |
| **Design and Oversight** | Design = 20% of Removal Action subtotal | $89,615 | $38,082 | $68,016 | $66,154 | $21,878 | $27,106 | $400 | $3,511 | $6,530 | $15,173 | $26,075 |
| | Oversight = 10% of Removal Action Subtotal | $44,808 | $19,041 | $34,008 | $33,077 | $10,939 | $13,553 | $200 | $1,756 | $3,265 | $7,586 | $13,038 |
| | subtotal = | **$134,423** | **$57,123** | **$102,025** | **$99,231** | **$32,817** | **$40,659** | **$600** | **$5,267** | **$9,795** | **$22,759** | **$39,113** |
| **Monitoring and Maintenance** | Monitoring and Maintenance for 3 years | $3,000 | $3,000 | $3,000 | $3,000 | $3,000 | $3,000 | | | $15,632 | $20,632 | $3,000 |
| | subtotal = | **$3,000** | **$3,000** | **$3,000** | **$3,000** | **$3,000** | **$3,000** | | | **$15,632** | **$20,632** | **$3,000** |
| | **SUBTOTAL =** | **$585,500** | **$250,533** | **$445,106** | **$432,999** | **$145,205** | **$179,187** | **$2,600** | **$22,822** | **$58,078** | **$119,255** | **$172,488** |
| **Contingency** | 20% Contingency | $117,100 | $50,107 | $89,021 | $86,600 | $29,041 | $35,837 | $520 | $4,564 | $11,616 | $23,851 | $34,498 |
| **Data Gaps** | Sampling | $10,000 | $10,000 | $10,000 | $10,000 | $10,000 | $10,000 | $5,000 | $5,000 | $5,000 | $5,000 | $15,000 |
| | Soils Attenuation Testing | | | | | | | $3,000 | | | | $3,000 |
| | ViroMineTM Pilot Test | | | | | | | | | | $10,000 | $10,000 |
| | Surface Water Quality and Flow Data | | | | | | | | $5,000 | $5,000 | $5,000 | $5,000 |
| | Topographic Survey | $5,000 | $5,000 | $5,000 | $10,000 | $5,000 | $10,000 | | $5,000 | $5,000 | $5,000 | $5,000 |
| | subtotal = | $15,000 | $15,000 | $15,000 | $20,000 | $15,000 | $20,000 | $8,000 | $15,000 | $15,000 | $25,000 | $38,000 |
| | **TOTAL COST =** | **$ 717,601** | **$ 315,639** | **$ 549,127** | **$ 539,599** | **$ 189,247** | **$ 235,025** | **$ 11,120** | **$ 42,386** | **$ 84,694** | **$ 168,106** | **$ 244,986** |

Notes:

[a]Cost based on excavation option 1- using maximum detected concentrations (MDCs)

[b]Cost based on excavation option 2 - using average (AVG) concentrations

[c]Cost based on repository cover option 1 - engineered cover; cover option 2 - earthen clay cover would increase cost from $18,000 to $33,000 based on options selected.

**Table 14. Data Gap Summary**
**Sunset Mine EE/CA**

| Data Gap | Potential Issues | Recommended Action | Estimated Cost |
|---|---|---|---|
| **Lack of sufficient background samples:**<br>• Minimal background samples collected for each media type<br>• Several mining disturbances upstream of the site<br>• Analytical results suggest surface water samples may not accurately represent true background levels | • Background surface water, pore water, and sediment samples may have been impacted by mining activities upstream of the site<br>• Prevents establishing statistically representative background concentrations for any media at the site<br>• May result in applying site cleanup criteria that are below background levels<br>• Makes it difficult to evaluate removal action effectiveness or compliance with ARARs | It is generally good practice to adequately characterize background conditions at a removal action site to ensure that cleanup criteria are above background levels, to evaluate removal action effectiveness, and determine post-removal compliance with ARARs. Additional background sampling should be conducted to develop statistically valid background concentrations for all media, and the analytical MDLs should be well below applicable screening criteria. | $10000 - $15000 |
| **Single waste rock sample from WR-5:**<br>• Only a single sample collected from waste rock pile WR-5<br>• Dependence on a single sample to characterize 300 cy of waste rock | • Sample appears to consist of copper ore<br>• Likely does not represent average concentrations for the entire waste rock pile<br>• May require unnecessary cleanup if actual concentrations are significantly lower | Samples collected during an SI are typically intended to target areas with the highest COI concentrations. However, based on concentrations in the nearby waste rock piles, average concentrations may actually be lower than the cleanup level. Additional samples should be collected from WR-5 to adequately characterize the pile and determine average COI concentrations. | |
| **Uncharacterized soil near mill site:**<br>• No soil samples collected from area suspected to be contaminated between WR-1 and Trout Creek<br>• Metals concentrations in the Adit 2 discharge increase significantly in this area indicating exposure to mine waste | • Mine waste with high concentrations of metals likely present between waste rock pile WR-1 and Trout Creek<br>• May contribute contaminant loading to Trout Creek<br>• May pose a threat to human and ecological receptors | Soil characterization samples should be collected to adequately characterize soils in the area. Extent of mine waste or contaminated soil should be delineated and the volume of material estimated. | |
| **Concrete mill foundation not characterized:**<br>• No samples of the concrete mill foundation have been collected | • Concrete may contain elevated leachable concentrations of metals<br>• May be considered a hazardous waste | A sample from the concrete mill foundation should be collected and analyzed to determine whether the material can be disposed of in an on-site repository or sanitary landfill. | |
| **Soils attenuation testing at Adit 1:**<br>• No column tests performed using the Adit 1 discharge and native soil | • Metals in the Adit 1 discharge may be naturally attenuated by infiltrating in native soil | Samples of the Adit 1 discharge and native soils around the adit should be collected for attenuation testing. | $2000-$3000 |

**Table 14. Data Gap Summary**
**Sunset Mine EE/CA**

| Data Gap | Potential Issues | Recommended Action | Estimated Cost |
|---|---|---|---|
| **Viability of treating Adit 2 discharge with ViroMine™ media:**<br>• No column tests performed using the Adit 2 discharge and ViroMine™ pellets | • Metals in the Adit 2 discharge may be removed using ViroMine™ pellets | A small-scale pilot test or column testing should be performed using the Adit 2 discharge and ViroMine™ pellets to determine treatability. | $5000-$10000 |
| **Potential presence of T&E amphibian species:**<br>• SI indicates T&E amphibian species may be present at the site | • T&E species are to be protected to the individual level.<br>• May require special measures to accommodate a sensitive species. | A detailed biological survey should be conducted to determine whether T&E amphibian species are present at the site, specifically around the adit discharge areas. Consult with USFS biologist. | USFS |
| **Limited surface water quality and flow data**:<br>• Flow and water quality data limited to a single set of measurements during spring flow<br>• No water quality data for low flow periods<br>• Adit discharge water quality data based on single samples | • Flows and water chemistry may differ significantly during low flow conditions<br>• Adit discharge treatment system may be improperly designed based on limited water quality data<br>• Removal action costs may be under or overestimated | Collect water quality samples from the Adit 2 discharge and Trout Creek during low flow conditions and measure flows. | $3000-$5000 |
| **Minimal site topography:**<br>• Topography generated in the SI covers a limited portion of the mill site and surrounding area<br>• No detailed topography for the upper workings or alternate mine waste repository location<br>• Trout Creek stream bank not clearly defined | • Difficult to prepare an engineered design for removal actions<br>• Difficult to delineate floodplain | Areas that will be addressed in the selected removal action alternative should be surveyed to provide adequate topography needed to prepare engineered designs and accurately estimate costs. | $5000-$10000 |
| | | **Total Estimated Cost =** | **$25000-$43000** |

Notes:
cy = Cubic yard
ARAR = Applicable or relevant and appropriate requirement
COI = Contaminant of interest
SI = Site Inspection
T&E = Threatened and endangered

**Table 15. Comparative Analysis of Removal Action Alternatives**
**Sunset Mine EE/CA**

| Assessment Criteria | Alternative 1<br>No Action | Alternative 2<br>Excavation and Off-site Disposal | Alternative 3<br>Excavation and On-site Disposal | Alternative 4<br>Treatment of Adit Discharges |
|---|---|---|---|---|
| **Compliance with Removal Action Goals and Objectives** | | | | |
| Attributes: | Does not comply | Waste material removed from site and physical hazards mitigated. | Waste material encapsulated on site and physical hazards mitigated. | Water discharging from open adit treated. |
| Advantages: | None | +Eliminates potential exposure at site | +Reduces exposure potential at site | +Improves water quality |
| **Overall Protectiveness of Public Health, Safety and Welfare** | | | | |
| Attributes: | No protection | All waste material exceeding cleanup levels removed from site. | All waste material exceeding cleanup levels encapsulated on site. | Water discharging from open adit treated to cleanup levels to the extent possible. |
| Advantages: | None | +Higher level of human protection<br>+Eliminates potential for future releases at the site | +High level of human protection<br>+Eliminates risk to community from long-distance transport of waste | +Improves human protection |
| **Environmental Protectiveness** | | | | |
| Attributes: | No protection | All waste material exceeding cleanup levels removed from site. | All waste material exceeding cleanup levels encapsulated on site. | Water discharging from open adit treated to cleanup levels to the extent possible. Settling pond may be a potential point of exposure. |
| Advantages: | None | +Higher level of ecological protection<br>+Eliminates potential for future releases at the site | +High level of ecological protection | +Improves ecological protection but actual degree of improvement questionable |
| **Compliance with Key ARARs** | | | | |
| Attributes: | Does not comply | Moderate compliance with Soil Quality ARARs<br>High compliance with Solids Disposal ARARs<br>High compliance with FP S&G ARARs | Moderate compliance with Soil Quality ARARs<br>Moderate to high compliance with Solids Disposal ARARs<br>High compliance with FP S&G ARARs | Low to high compliance with Water Quality ARARs |
| Advantages: | None | +Eliminates potential for future non-compliances from waste material<br>+Excavation option 1 (max contaminant concentrations) would be more compliant with Soil Quality ARARs | +Excavation option 1 (max contaminant concentrations) would be more compliant with Soil Quality ARARs<br>+Repository option 2 (ridge location) would better comply with FP S&Gs<br>+Cover option 1 (engineered cover) meets substantive Solids Disposal ARARs<br>+ Cover option 2 (earthen clay cover) may meet Solids Disposal ARARs | +Option 1 (channel reconstruction) would be minimally compliant<br>+Option 2 (settling ponds) would be moderately to highly compliant<br>+Option 3 (ViroMine™) may be moderately to highly compliant |
| **Long-term Effectiveness and Permanence** | | | | |
| Attributes: | No action | Waste source removed from site. Bat culverts and fencing may be subject to vandalism. | Waste source encapsulated on site. Effectiveness dependent on cover selection. Bat culverts and fencing may be subject to vandalism. | Improves surface water quality but may require periodic removal and disposal of accumulated solids. |
| Advantages: | None | +Most effective and permanent long term | +Effective and provides long-term permanence | +Intended to address long-term surface water quality |

**Table 15. Comparative Analysis of Removal Action Alternatives**
**Sunset Mine EE/CA**

| Assessment Criteria | Alternative 1<br>No Action | Alternative 2<br>Excavation and Off-site Disposal | Alternative 3<br>Excavation and On-site Disposal | Alternative 4<br>Treatment of Adit Discharges |
|---|---|---|---|---|
| **Reduction of Toxicity, Mobility and Volume** | | | | |
| Attributes: | No action | No reduction in toxicity or mobility, but waste is removed from site. | No reduction in toxicity or mobility, but waste is encapsulated. | Improves surface water quality by promoting settling of suspended solids, but may generate sludge with high concentrations of copper. |
| Advantages: | None | +Complete reduction of waste volume<br>+Most likely for reduction of mobility | +Significant reduction of waste volume<br>+Reduction in mobility dependent on cover option selected; option 1 will be more effective at minimizing mobility. | +Reduces metals loading to streams |
| **Short-Term Effectiveness** | | | | |
| Attributes: | No action | Waste removed from the site within one field season. | Waste encapsulated on site within one field season. Short-term effectiveness will depend on cover selected; option 1 will be more effective in the short term. | Settling pond would be immediately effective. |
| Advantages: | None | +Most easily constructed<br>+Minimal risk to community and workers | +Easily constructed<br>+Minimal risk to community and workers<br>+Does not require off-site transport of waste | +Easily constructed<br>+Quickly effective |
| **Implementability** | | | | |
| Attributes: | Not applicable | Waste removal, transport, and site reclamation accomplished using standard construction equipment and methods. | Waste removal, transport, site reclamation, and repository construction accomplished using standard construction equipment and methods. | Construction of settling pond constrained by limited available area. |
| Advantages: | None | +Easiest to implement; technically and administratively feasible. | +Easily implemented; technically and administratively feasible. | +Implementable; technically and administratively feasible |
| **State and Federal Agency, and Community Acceptance** | | | | |
| Attributes: | Not acceptable | Waste removed from site and physical hazards mitigated. | Waste encapsulated on site and physical hazards mitigated. | Water quality improvements implemented on site. |
| Advantages: | None | +Most acceptable | +Acceptable | +Acceptable |

**Table 15. Comparative Analysis of Removal Action Alternatives**
**Sunset Mine EE/CA**

| Assessment Criteria | Alternative 1<br>No Action | Alternative 2<br>Excavation and Off-site Disposal | Alternative 3<br>Excavation and On-site Disposal | Alternative 4<br>Treatment of Adit Discharges |
|---|---|---|---|---|
| **Estimated Total Present Worth Cost** | | | | |
| Attributes: | $0 | Excavation Option 1 - using MDCs = $717,601<br>Excavation Option 2 - using AVG = $315,639 | Repository Location 1 - Mill Site:[a]<br>Excavation Option 1 - using MDCs = $549,127<br>Excavation Option 2 - using AVG = $189,247<br>Repository location 2 - Ridge:<br>Excavation Option 1 - using MDCs = $539,599<br>Excavation Option 2 - using AVG = $235,025 | Adit 1 constructed channel = $11,120<br>Adit 2 constructed channel = $42,386[b]<br>Adit 2 ViroMine™ system = $168,106<br>Adit 2 settling ponds = $84,694[b] |
| Advantages (= cost savings over most expensive option): | +$717,601 | Using Excavation Option 2 (AVG) = +$401,962<br>Using Excavation Option 1 (MDCs) = +$0 | Using Repository Location 1 (Mill) and Excavation Option 2 (AVG) = +$359,880<br>Using Repository Location 2 (Ridge) and Excavation Option 2 (AVG) = +$314,102<br>Using Repository Location 2 (Ridge) and Excavation Option 1 (MDC) = +$9,528<br>Using Repository Location 1 (Mill) and Excavation Option 1 (MDCs) = +$0 | Adit 1:<br>No action at Adit 1 = +$11,120<br>Using constructed channel = +$0<br>Adit 2:<br>Using constructed channel at Adit 2 = +$125,720<br>Using settling ponds at Adit 2 = +$83,412<br>Using ViroMine™ system = +$0 |

Notes:

[a]Costs based on engineered cover option; an earthen clay cover would increase costs $18,000 to $33,000 based on options selected.

[b]Cost assumes constructed in coordination with other alternatives; if constructed independently, would need to add mobilization and other costs.

ARAR = Applicable or Relevant and Appropriate Requirement
AVG = Average
FP S&Gs = Forest Plan Standard and Guidelines
MDC = Maximum detected concentration

# Figures

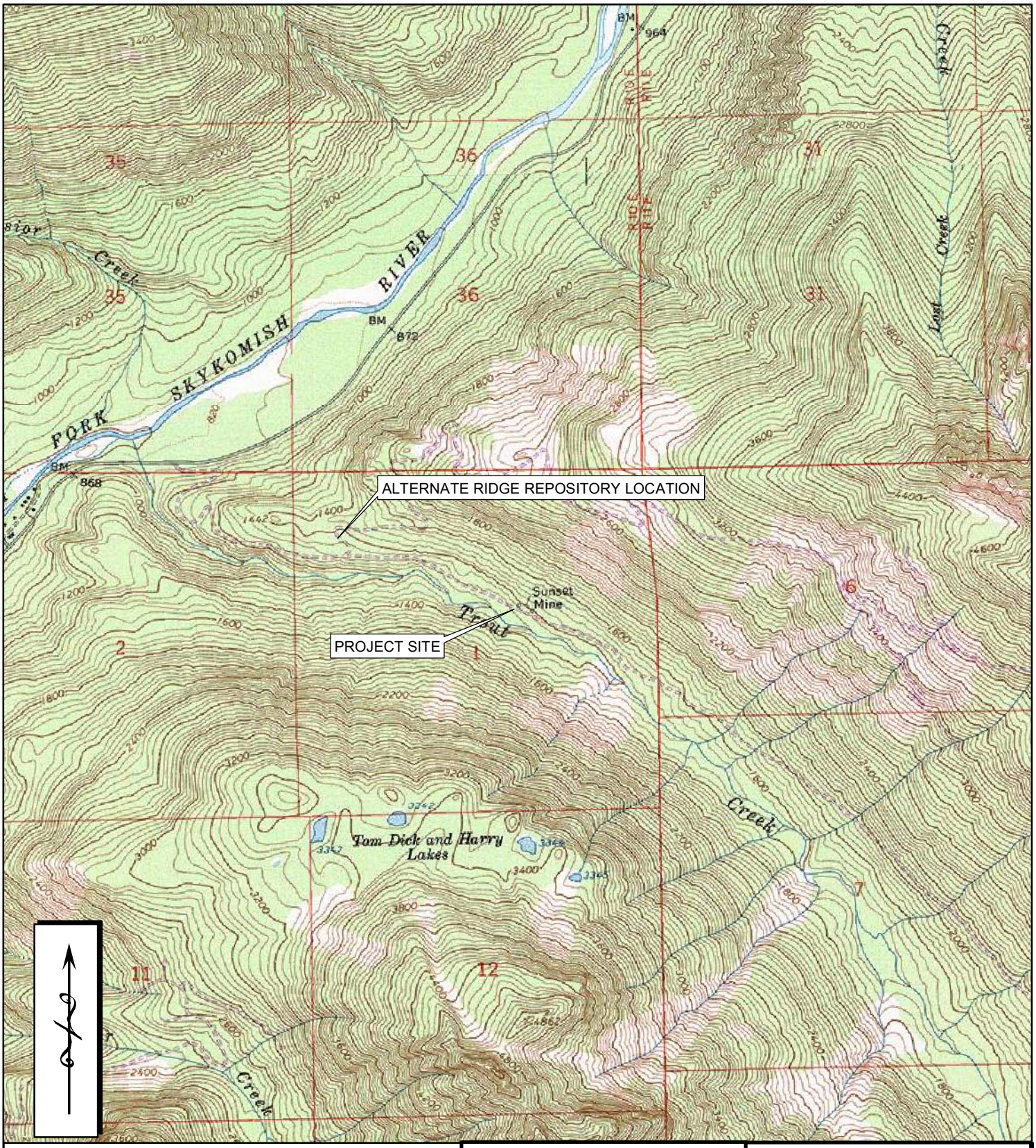


REFERENCE: U.S.G.S. 7.5 MINUTE QUADRANGLE, BARING, WASHINGTON 1969

SCALE

0 0.25 0.5 1 Miles

0 500 1,000 2,000 3,000 4,000 Feet

MSE Millennium Science & Engineering, Inc.

1605 North 13th Street
Boise, ID 83702 USA
Phone: (208) 345-8292

**VICINITY MAP**

**SUNSET MINE**
**MT. BAKER SNOQUALMIE**
**NATIONAL FOREST, WASHINGTON**

| B2473.D | 08-15-07 | MSE | FIGURE 1 |
|---|---|---|---|

:J\mse\puett\wash_mines\sunset_vicinity.mxd 08.15.07

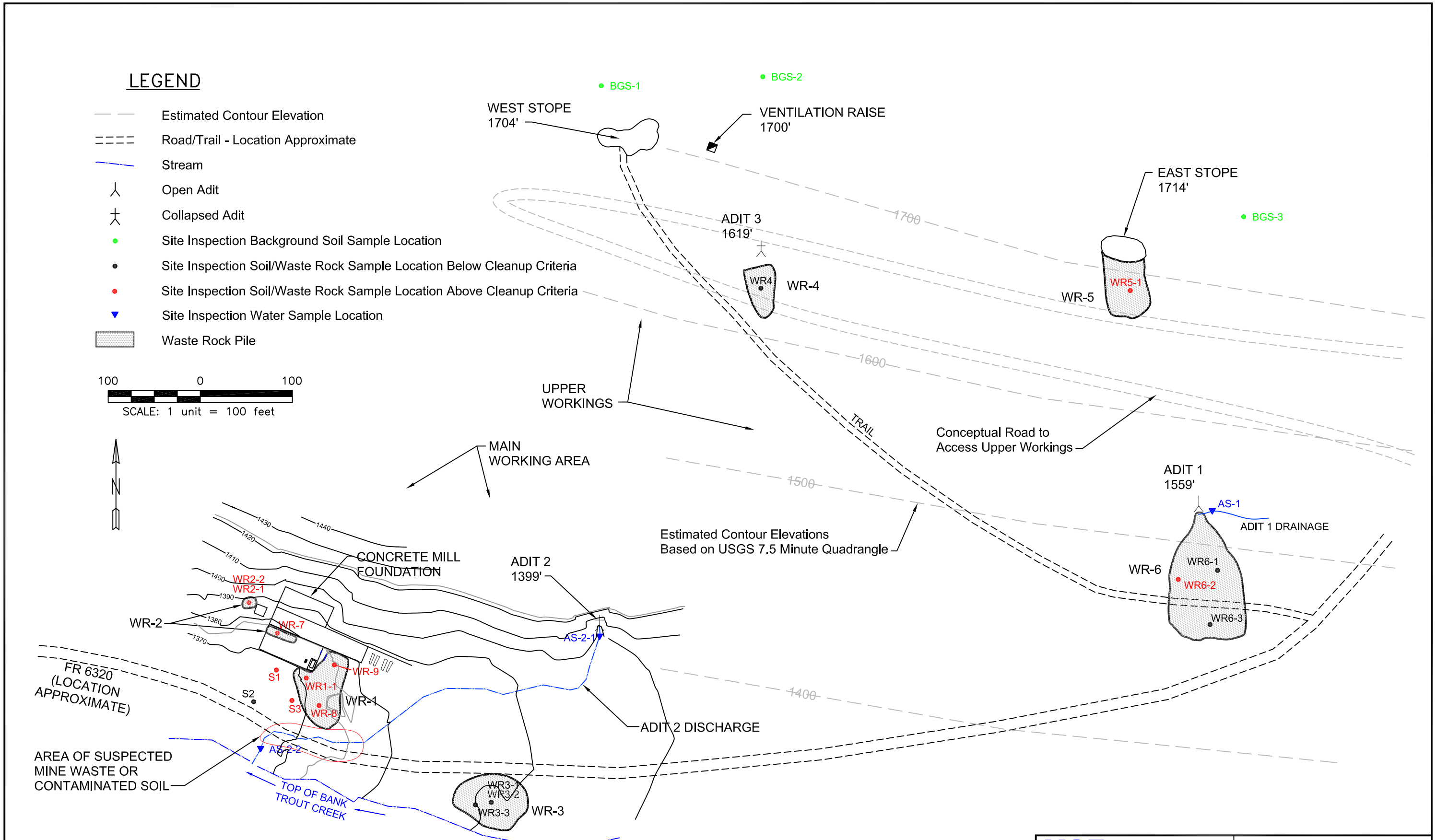


Base Map Source: Site Inspection, Cascade Earth Sciences, 2005

**CONCEPTUAL DESIGN DRAWINGS ONLY - NOT INTENDED FOR CONSTRUCTION**

MSE Millennium Science and Engineering, Inc.
1605 North 13th Street
Boise, Idaho 83702
Phone: (208) 345-8292

**Sunset Mine**
**Overall Site Map**

| B2473G | figure2.dwg | 12-27-07 | Figure 2 |
|---|---|---|---|

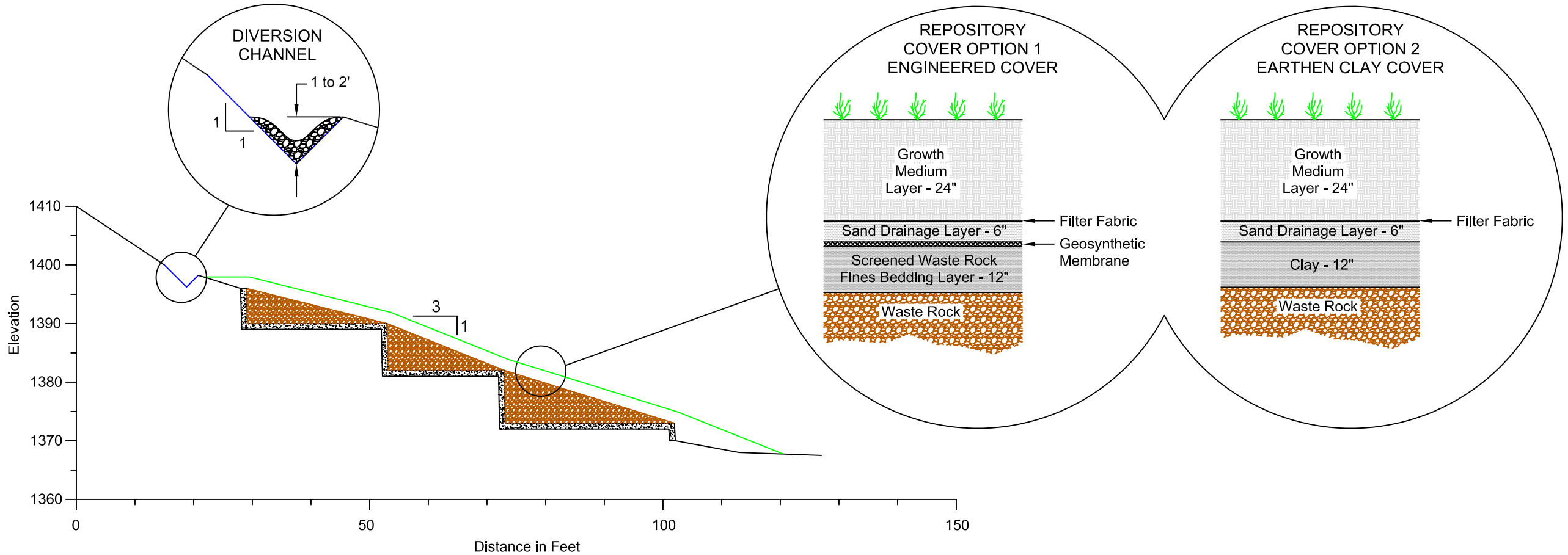


MILL SITE REPOSITORY CROSS SECTION

Scale: 1" = 20'

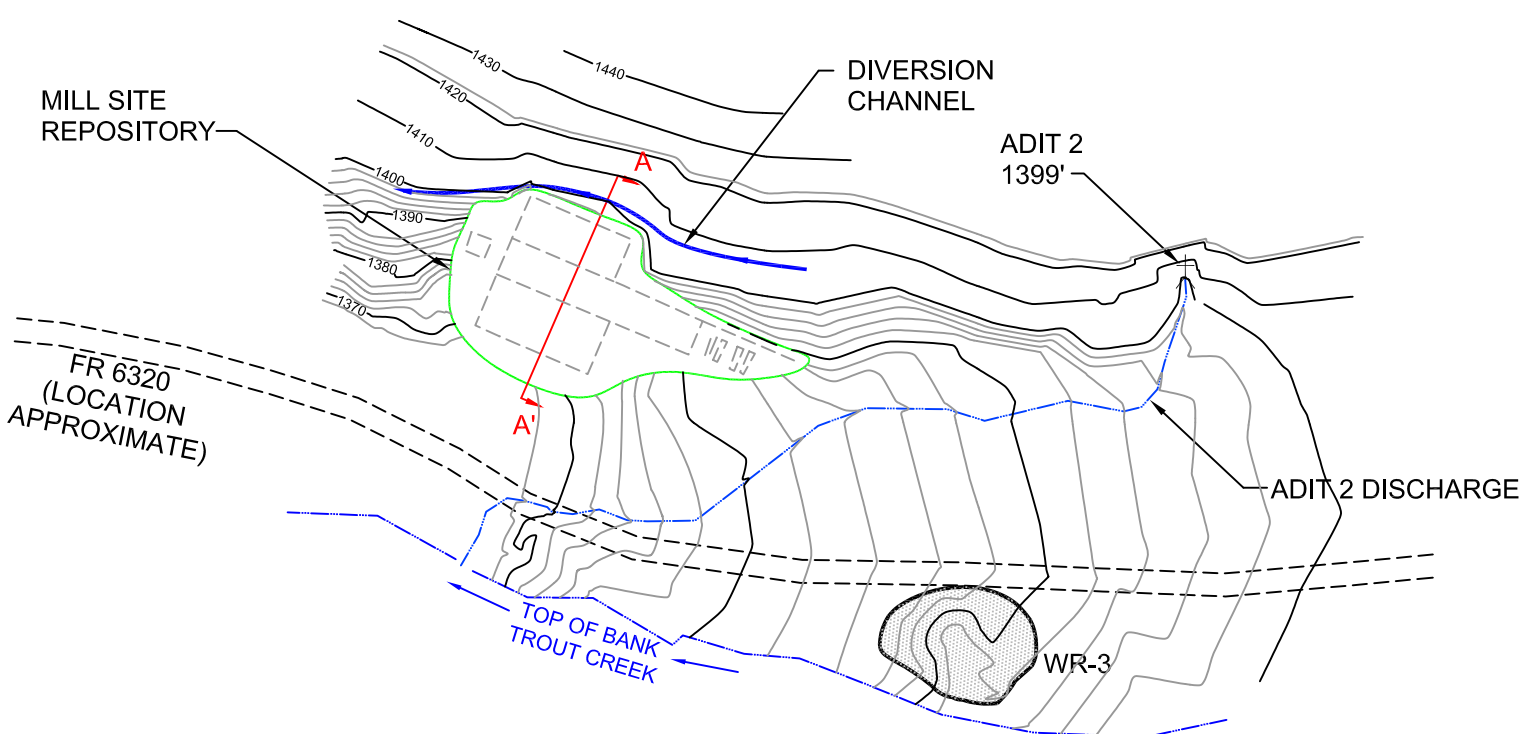


MILL SITE REPOSITORY PLAN VIEW

Scale: 1" = 100'

N

## LEGEND

- Road/Trail - Location Approximate
- Stream
- Collapsed Adit
- Waste Rock Pile to Remain

Base Map Source: Site Inspection, Cascade Earth Sciences, 2005

**CONCEPTUAL DESIGN DRAWINGS ONLY - NOT INTENDED FOR CONSTRUCTION**

MSE Millennium Science and Engineering, Inc.
1605 North 13th Street
Boise, Idaho 83702
Phone: (208) 345-8292

**Sunset Mine**
**Mill Site Repository**

| B2473G | figure3.dwg | 1-4-08 | Figure 3 |
|---|---|---|---|

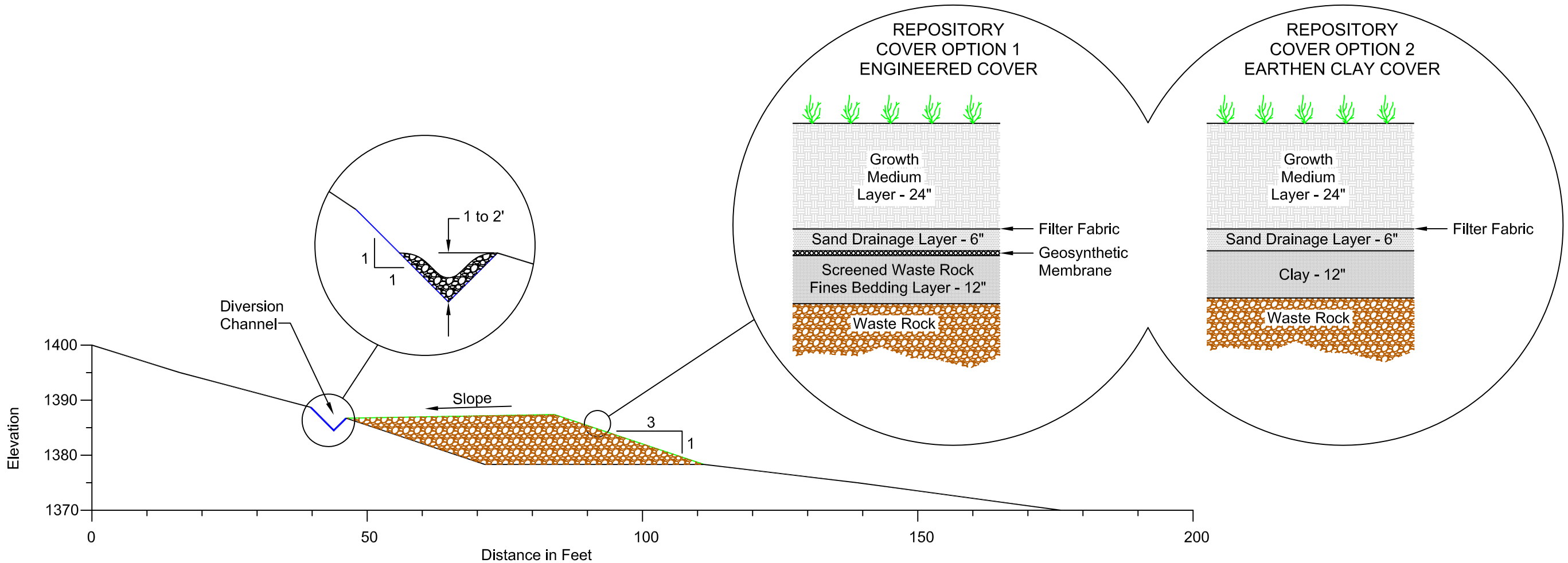


Note: Elevation and horizontal distance are conceptual only.

## CONCEPTUAL RIDGE REPOSITORY CROSS SECTION

Not to Scale

**CONCEPTUAL DESIGN DRAWINGS ONLY - NOT INTENDED FOR CONSTRUCTION**

MSE Millennium Science and Engineering, Inc.
1605 North 13th Street
Boise, Idaho 83702
Phone: (208) 345-8292

**Sunset Mine Ridge Repository**

| B2873G | figure4.dwg | 12-27-07 | Figure 4 |
|---|---|---|---|

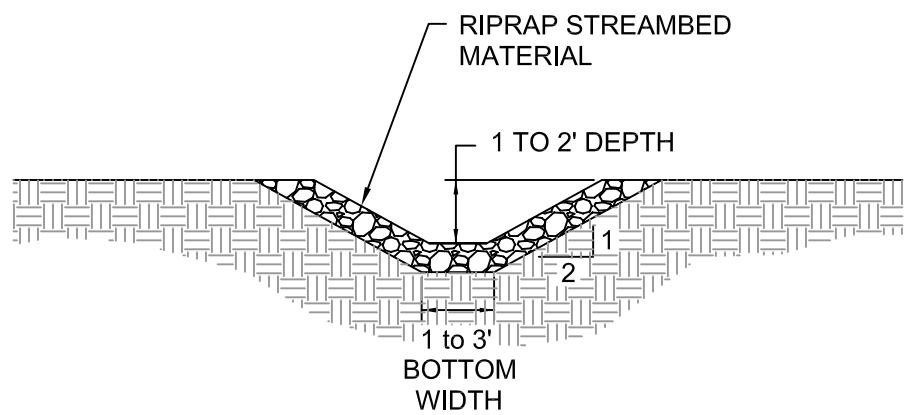


RECONSTRUCTED CHANNEL CROSS-SECTION
Not to Scale

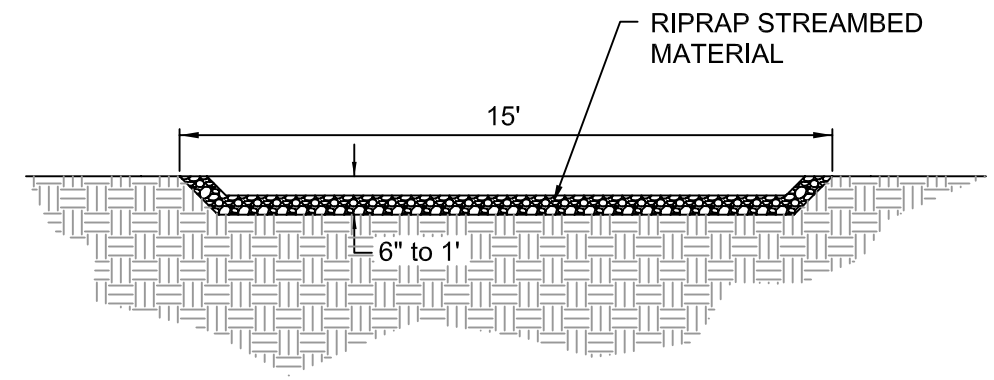


ROAD CROSSING CROSS-SECTION
Not to Scale

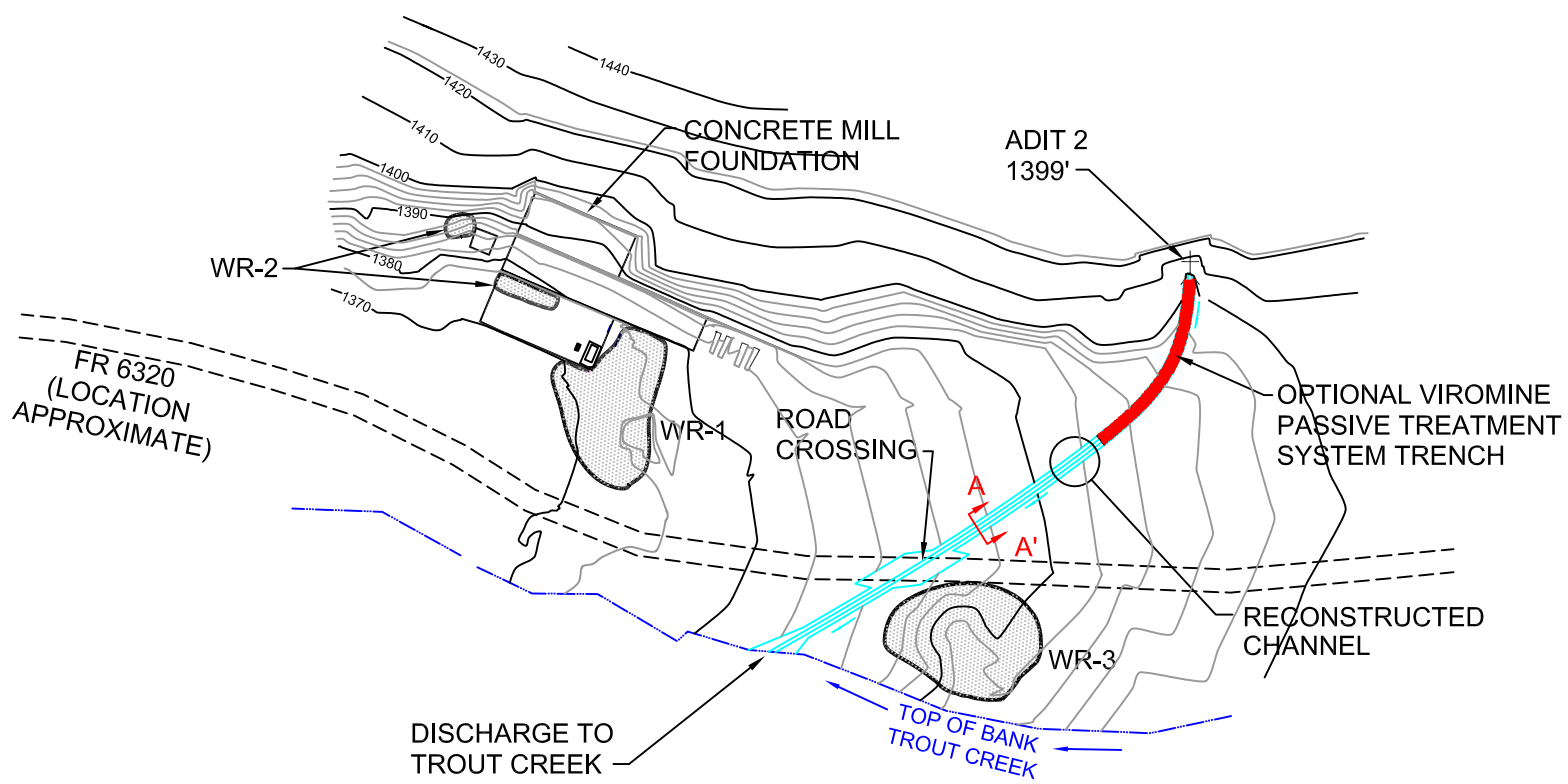


RECONSTRUCTED CHANNEL PLAN VIEW
Scale: 1" = 100'

## LEGEND

- Road/Trail - Location Approximate
- Stream
- Collapsed Adit
- Waste Rock Pile

N

Base Map Source: Site Inspection, Cascade Earth Sciences, 2005

**CONCEPTUAL DESIGN DRAWINGS ONLY - NOT INTENDED FOR CONSTRUCTION**

MSE Millennium Science and Engineering, Inc.
1605 North 13th Street
Boise, Idaho 83702
Phone: (208) 345-8292

**Sunset Mine Reconstructed Channel**

| B2473G | figure5.dwg | 2-04-08 | Figure 5 |
|---|---|---|---|

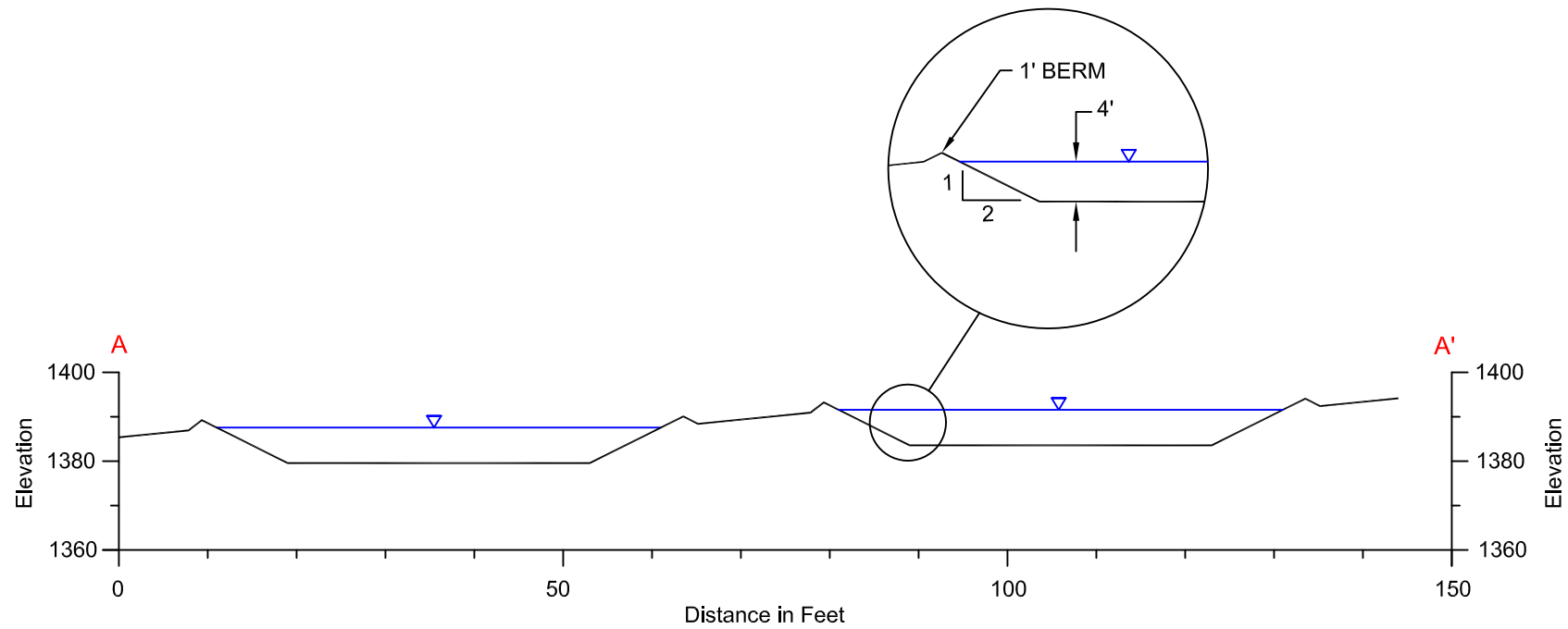


## SETTLING PONDS CROSS SECTION

Scale: 1" = 20'

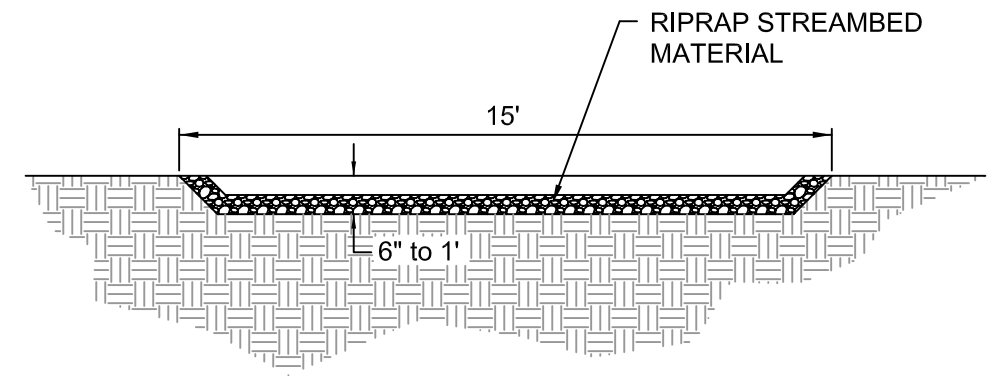


## ROAD CROSSING CROSS-SECTION

Not to Scale

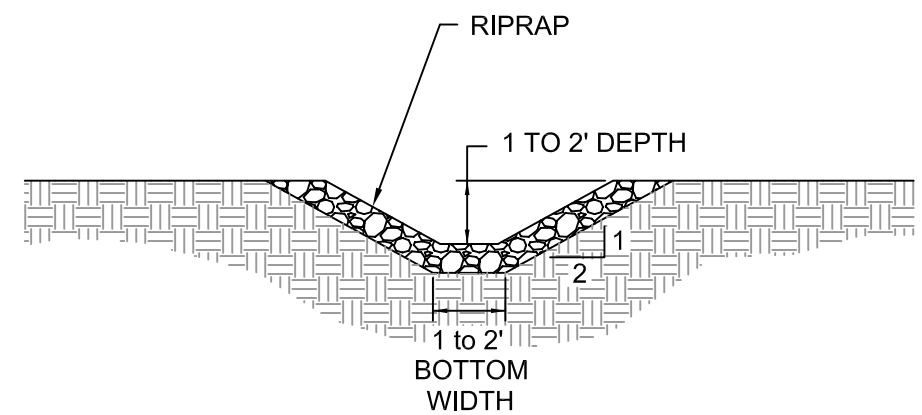


## RIPRAP CHANNEL CROSS-SECTION

Not to Scale

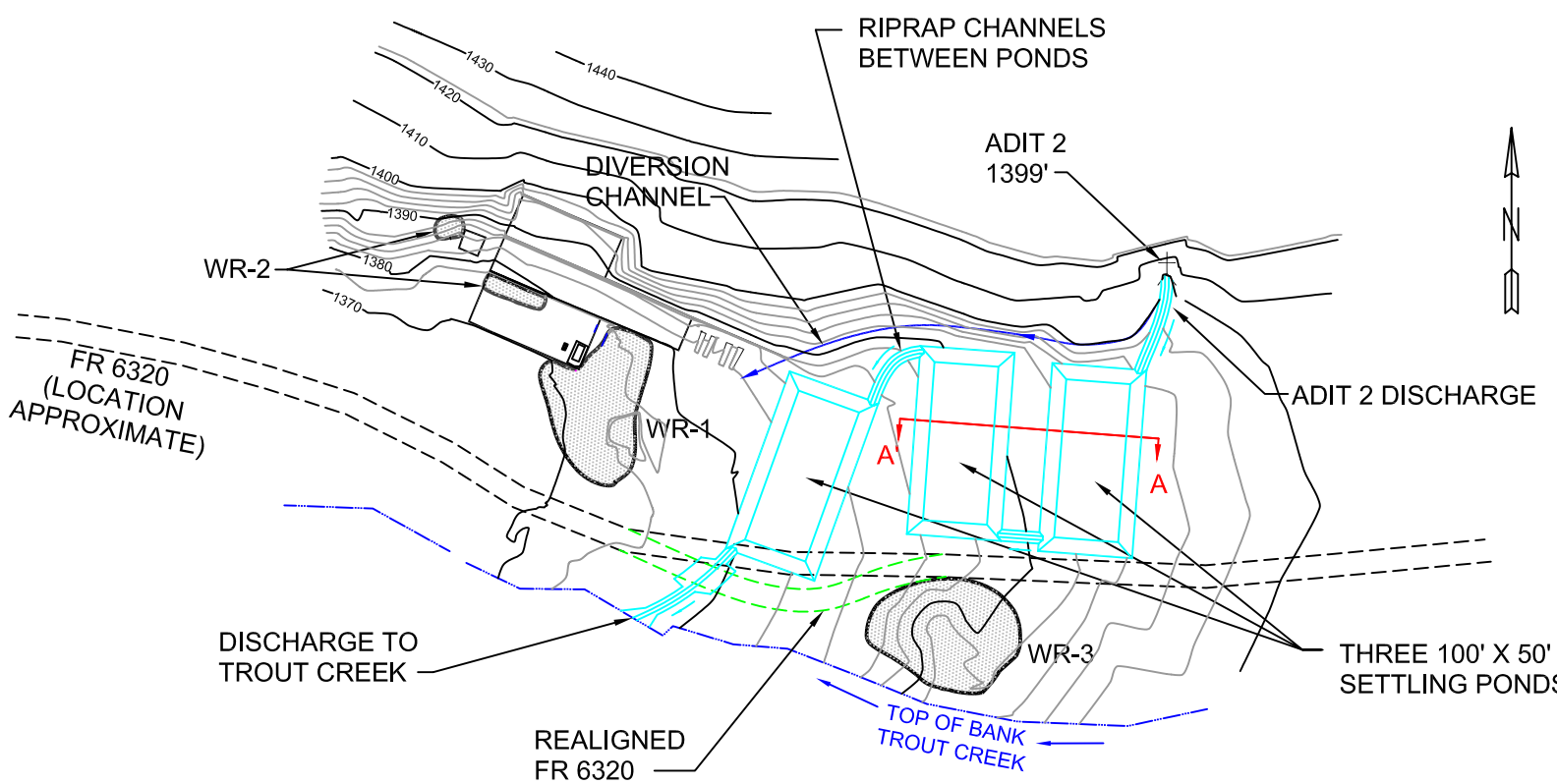


## SETTLING PONDS PLAN VIEW

Scale: 1" = 100'

## LEGEND

- Road/Trail - Location Approximate
- Stream
- Collapsed Adit
- Waste Rock Pile

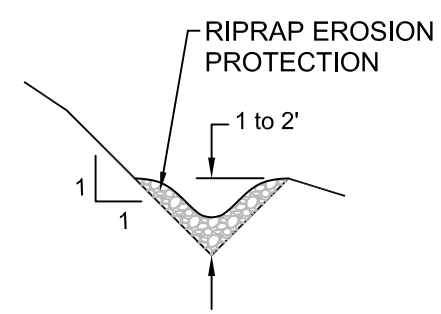


## DIVERSION CHANNEL CROSS SECTION

Not to Scale

Base Map Source: Site Inspection, Cascade Earth Sciences, 2005

**CONCEPTUAL DESIGN DRAWINGS ONLY - NOT INTENDED FOR CONSTRUCTION**


MSE Millennium Science and Engineering, Inc.
1605 North 13th Street
Boise, Idaho 83702
Phone: (208) 345-8292


**Sunset Mine Settling Ponds**

| B2473G | figure6.dwg | 12-27-07 | Figure 6 |
|---|---|---|---|

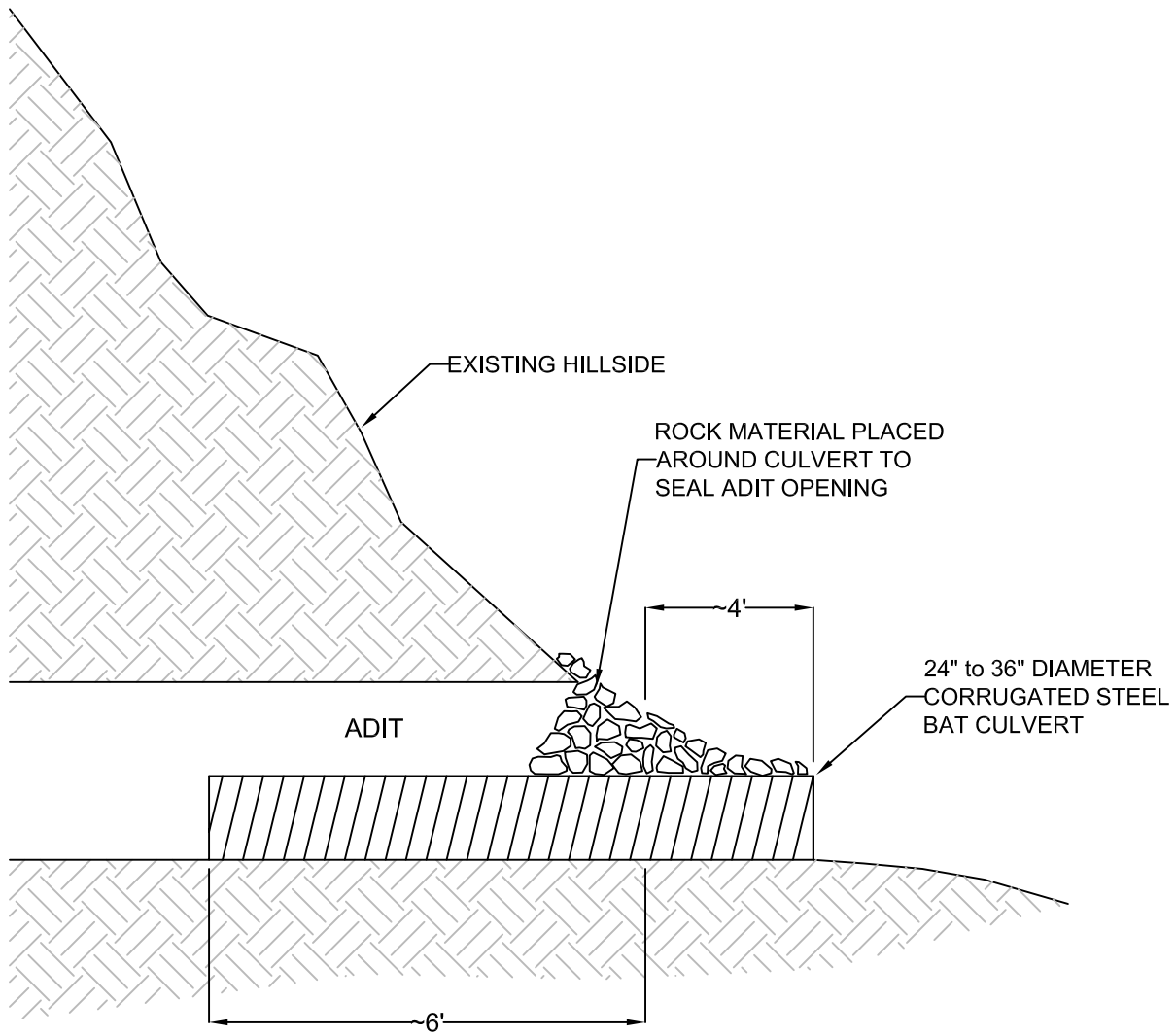


BAT CULVERT PROFILE
Not to Scale

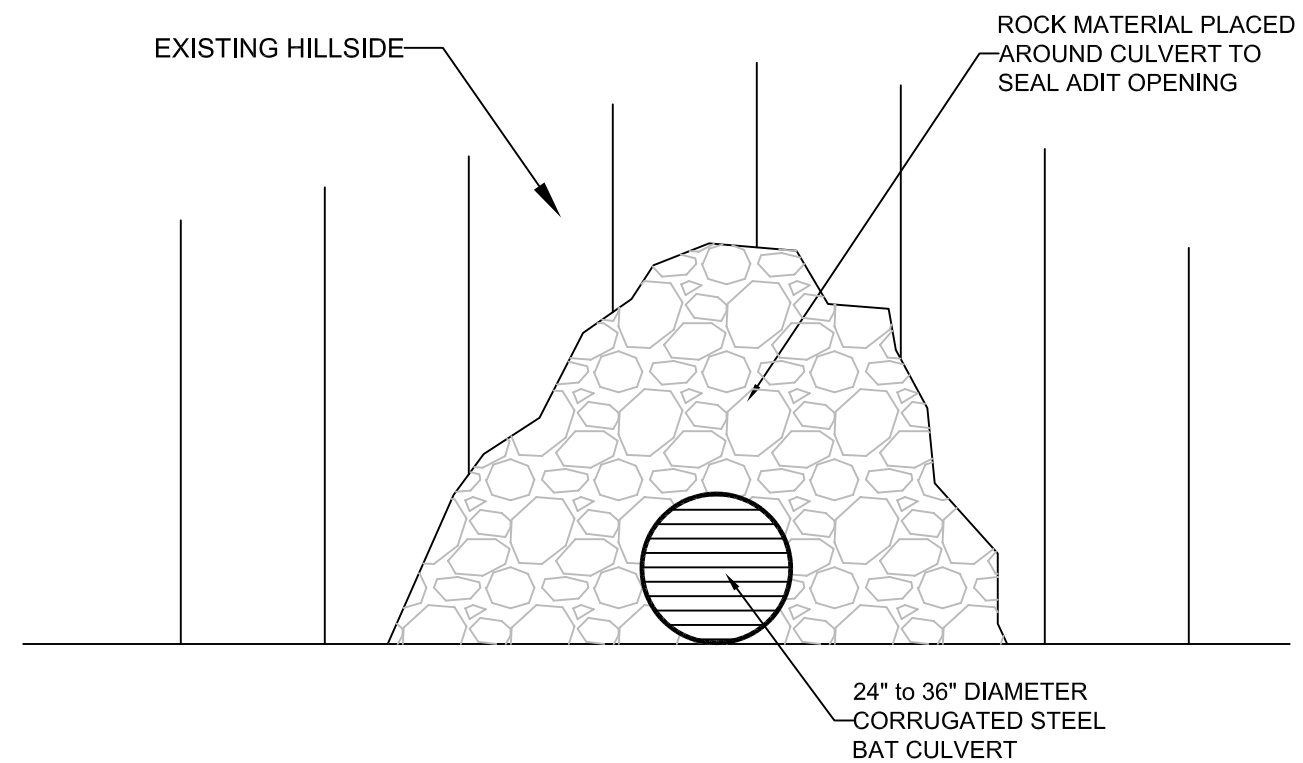


BAT CULVERT FRONT VIEW
Not to Scale

**CONCEPTUAL DESIGN DRAWINGS ONLY - NOT INTENDED FOR CONSTRUCTION**

MSE Millennium Science and Engineering, Inc.
1605 North 13th Street
Boise, Idaho 83702
Phone: (208) 345-8292

**Sunset Mine**
**Bat Culvert Details**

| B2473G | figure7.dwg | 2-04-08 | Figure 7 |
|---|---|---|---|

# APPENDIX A

# SITE PHOTOGRAPHS

**Photo 1: Mill foundation and main working area**

**Photo 2: Mill foundation and main working area from above**

**Photo 3: Mill foundation and waste rock pile WR-1**

**Photo 4: Mill foundation and waste rock pile WR-1 from below**

**Photo 5: Waste rock pile WR-1**

**Photo 6: Mill foundation and waste rock pile WR-2**

**Photo 7: Waste rock pile WR-3**

**Photo 8: Discharge from Adit 2 flowing along FR 6320**

**Photo 9: Adit 2**

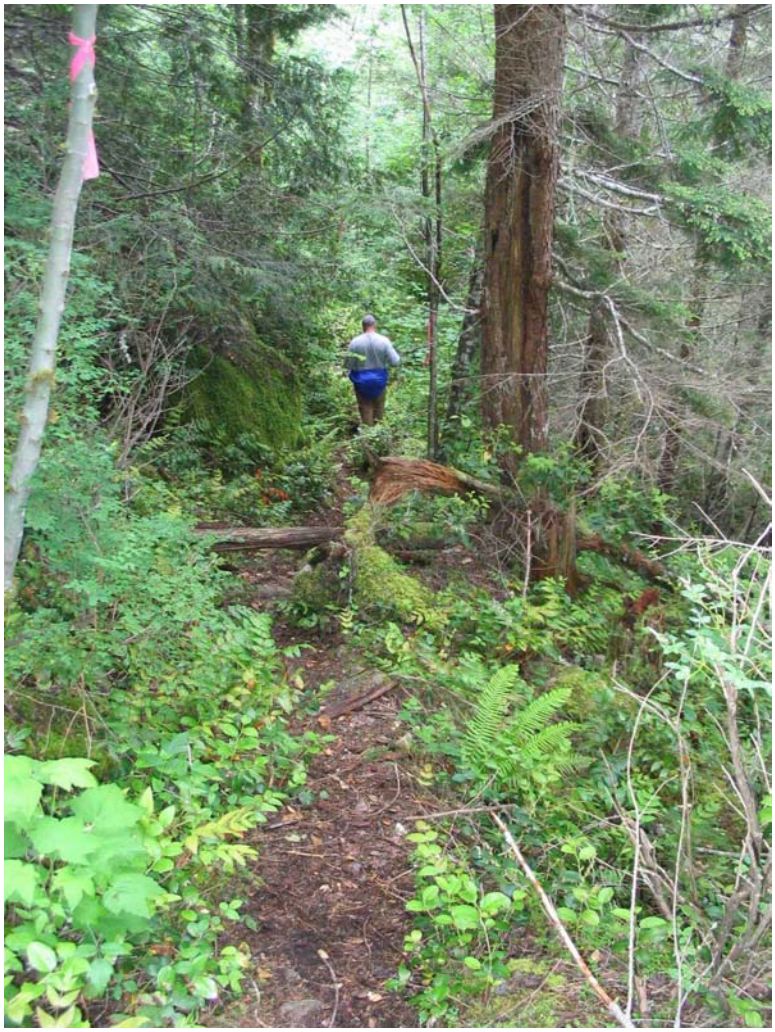

**Photo 10: Trail to upper workings**

**Photo 11: Waste rock pile WR-6**

**Photo 12: Adit 1**

**Photo 13: Adit 1 discharge**

**Photo 14: Waste rock pile WR-5**

**Photo 15: East stope**

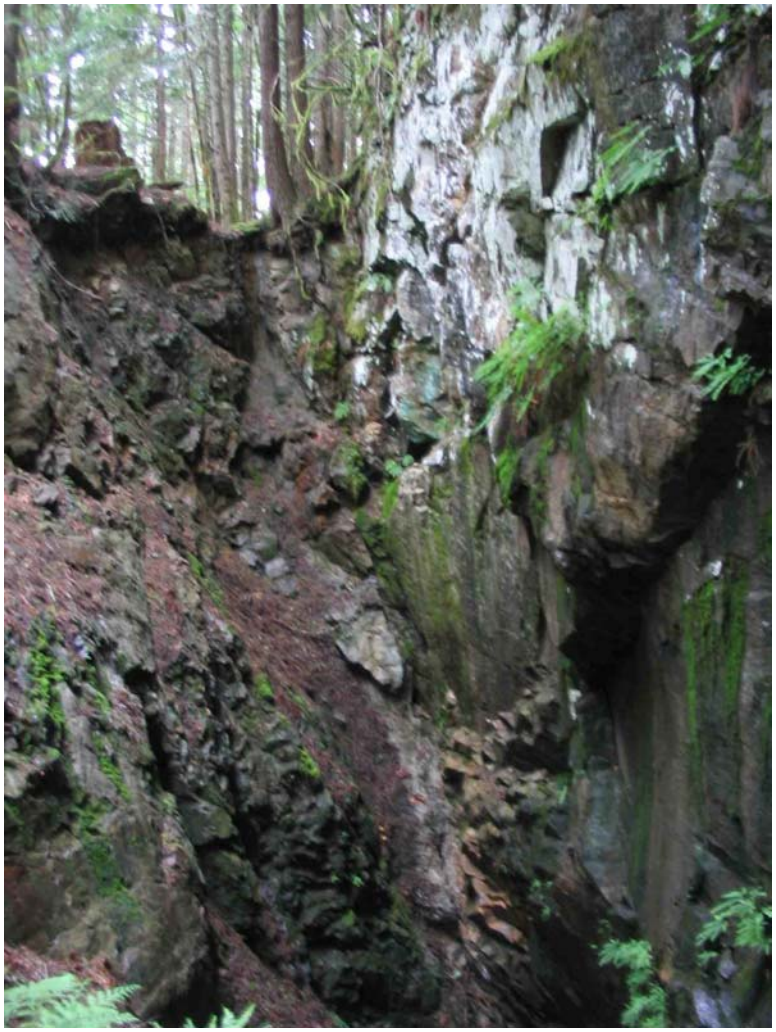

**Photo 16: East stope highwall**

**Photo 17: Waste rock pile WR-4**

**Photo 18: Adit 3**

**Photo 19: Adit 3 opening**

**Photo 20: West stope collapse**

**Photo 21: West stope**

**Photo 22: Ventilation raise**

**Photo 23: Ventilation raise opening**

**Photo 24: Trout Creek adjacent to site**

**Photo 25: Trout Creek looking upstream from site**

**Photo 26: Road to optional ridge repository location**

**Photo 27: Optional ridge repository location**

# APPENDIX B

# APPLICABLE OR RELEVANT AND APPROPRIATE REQUIREMENTS

**Chemical-Specific**
**Applicable or Relevant and Appropriate Requirements**
**Sunset Mine, Washington**

| Standard, Requirement Criteria, or Limitation | Citation | Description | Applicable/Relevant and Appropriate? |
|---|---|---|---|
| **FEDERAL** | | | |
| Safe Drinking Water Act (SDWA) | 40 USC § 300 | | |
| National Toxics Rule | 40 CFR Part 131 | Establishes water quality standards for protection of human health and aquatic organisms for states that fail to fully comply with Clean Water Act (CWA) Section 303(c)(2)(C). | Not Applicable—the State of Washington has been delegated this program. |
| National Primary Drinking Water Regulations | 40 CFR Part 141 | Establishes health-based standards, maximum contaminant levels (MCL) and maximum contaminant level goals (MCLG), for public water systems. | Potentially Relevant and Appropriate to potable surface water at the site; however, Removal Action does not involve a public water supply. |
| Clean Water Act (CWA) | 33 USC §§ 1314 | | |
| National Recommended Water Quality Criteria (NWQC) | 33 USC § 1251 et seq., Section 304(a), 40 CFR Part 131 | Establishes non-enforceable criteria for water quality based on toxicity to aquatic organisms and human health. | Not Applicable—the State of Washington has been delegated this program. Recommended but not enforceable criteria. |
| Clean Air Act (CAA) | 40 USC § 7409 | | |
| National Primary and Secondary Ambient Air Quality Standards (NAAQS) | 42 USC §§ 7401 et seq. | Establishes air quality levels that protect public health. | Not Applicable—only "major" sources are subject to requirements related to NAAQS, defer to state regulation of fugitive dust emissions. |
| Resource Conservation and Recovery Act (RCRA) | 40 USC § 6901-6992k | | |
| Hazardous Wastes | 40 CFR Part 261, Subpart D and C | Defines those solids wastes which are subject to regulation as hazardous wastes under 40 CFR Parts 262-265 and Parts 124, 270, and 271. | Potentially Applicable or Relevant and Appropriate. Washington has not adopted the Bevill Amendment for mining waste. See action-specific ARARs for further discussion. |

**Chemical-Specific**
**Applicable or Relevant and Appropriate Requirements**
**Sunset Mine, Washington**

| Standard, Requirement Criteria, or Limitation | Citation | Description | Applicable/Relevant and Appropriate? |
|---|---|---|---|
| **STATE OF WASHINGTON** | | | |
| Hazardous Waste Removal Reduction Act | RCW Chapter 70.95C | Establishes state policies and goals that encourage the reduction of hazardous substance use and the generation of hazardous waste. Requires certain hazardous waste generators and hazardous substance users to prepare plans for voluntarily reducing hazardous substance use and hazardous waste generation. | Potentially Relevant and Appropriate |
| Persistent Bioaccumulative Toxins Rule | WAC Chapter 173-333 | Establishes criteria to identify persistent bioaccumulative toxins that pose human health or environmental threats, defines chemical action plans preparation, and defines the processes ecology will use to coordinate the implementation of this chapter with the department of health and other agencies. | Potentially Relevant and Appropriate |
| Surface Water Beneficial Uses | WAC Chapter 173-201A-200 and -600 | Requires that surface water bodies be protected for their designated beneficial uses | Potentially Relevant and Appropriate |
| Dangerous Waste Regulations | WAC Chapter 173-303 | (1) Designates solid wastes that are dangerous or extremely hazardous to the public health and environment; (2) provides for surveillance and monitoring of dangerous and extremely hazardous wastes; (3) establishes a system for manifesting, tracking, reporting, monitoring, recordkeeping, sampling, and labeling dangerous and extremely hazardous wastes; (4) establishes siting, design, operation, closure, postclosure, financial, and monitoring requirements for dangerous and extremely hazardous waste transfer, treatment, storage, and disposal facilities; (5) establishes design, operation, and monitoring requirements for managing the state's extremely hazardous waste disposal facility; (6) establishes a program for permitting dangerous and extremely hazardous waste management facilities; and (7) encourages recycling, reuse, reclamation, and recovery to the maximum extent possible. | Potentially Relevant and Appropriate |

**Chemical-Specific**
**Applicable or Relevant and Appropriate Requirements**
**Sunset Mine, Washington**

| Standard, Requirement Criteria, or Limitation | Citation | Description | Applicable/Relevant and Appropriate? |
|---|---|---|---|
| **STATE OF WASHINGTON (continued)** | | | |
| Drinking Water Standards | Revised Code of Washington (RCW) 70.119A, WAC Chapter 246-290 | Established health-based MCLs for public water supplies. | Potentially Relevant and Appropriate to surface water drinking sources at the site. |
| Water Quality Standards for Surface Water | RCW 90.48, WAC Chapter 173-201A | Establishes aquatic life criteria for hazardous substances in freshwater. | Potentially Applicable. State of Washington is authorized by EPA to implement CWA. |
| Model Toxics Control Act (MTCA) | RCW 70.105D, WAC Chapter 173-340 | Specifies that surface water cleanup standards be based on estimates if the highest beneficial use and the reasonable maximum potential exposure under current and future site uses.<br><br>Establishes administrative processes and standards to identify, investigate, and clean up facilities where hazardous substances have come to be located. It defines the role of the department and encourages public involvement in decision making. | Potentially Relevant and Appropriate |
| | WAC Chapter 173-340-7490 | Specifies procedures for a Terrestrial Ecological Evaluation (TEE) to determine if the existence of hazardous substances at a site could harm terrestrial plants or animals, and to establish cleanup levels to protect biota. | Potentially Relevant and Appropriate |
| Natural Background Soil Metals Concentrations | WDOE Publication 94-115, October 1994 | Defines region–specific natural background concentrations for metals in surficial soils throughout the state. | To Be Considered |
| Sediment Management Standards | WAC 173-204 | Establishes freshwater surface sediment management standards. | Potentially Relevant and Appropriate |
| Economic Impact Statement For Proposed Sediment Management Standards | WAC 173-204 | The WDOE is proposing a management process for implementing sediment quality standards pursuant to requirements of the Model Toxics Control Act, the Water Pollution Control Act, and the Puget Sound Water Quality Authority Act. | To Be Considered |

**Location-Specific**
**Applicable or Relevant and Appropriate Requirements**
**Sunset Mine, Washington**

| Standard, Requirement Criteria, or Limitation | Citation | Description | Applicable/Relevant and Appropriate? |
|---|---|---|---|
| **FEDERAL** | | | |
| RCRA | 40 USC § 7601 | | |
| Hazardous and Solid Waste Regulations | 40 CFR Part 264.18 | Location standards and restrictions for hazardous waste treatment, storage, and disposal (TSD) facilities. | Potentially Relevant and Appropriate |
| | 40 CFR §§ 257.3-1 through 257.3-4 | Location standards and restrictions for municipal solid waste (MSW) facilities. | Potentially Relevant and Appropriate |
| Fish and Wildlife Coordination Act | 16 USC §§ 661-667 | Requires consultation with the USFWS when federal department or agency proposes or authorizes any modification of any stream or other water body to assure adequate protection of fish and wildlife resources. | Potentially Applicable |
| Fish and Wildlife Conservation Act | 16 USC §§ 2901-2911 | Promotes conservation of non-game fish and wildlife through assistance to states and use of federal authority. | Potentially Applicable |
| Protection of Wetlands Executive Order No. 11990 | 40 CFR Part 6; Appendix A, 40 CFR 6.302(a) | Established to avoid adverse impacts associated with the destruction or loss of wetlands and avoid support of new construction in wetlands if a practicable alternative exists. | Potentially Applicable |
| Floodplain Management Executive Order No. 11988 | 40 CFR Part 6, Appendix A<br><br>40 CFR 6.302(b) | Requires federal agencies to evaluate the potential effects of actions they may take in a floodplain to avoid the adverse impacts associated with direct and indirect development of a floodplain to the extent possible. | Potentially Applicable |
| Dredge and Fill Regulations | 33 USC § 1344, 33 CFR 323.1 et seq. | Prohibits discharge of dredged or fill material into waters of the United States without a permit | Potentially Relevant and Appropriate |
| Bald Eagle Protection Act | 16 USC §§ 668 et seq. | Requires continued consultation with the USFWS during remedial design and remedial construction to ensure that any cleanup of the site does not unnecessarily adversely affect the bald or golden eagle. | Applicable Requirement |
| Endangered Species Act (ESA) | 16 USC §§ 1531-1544 | Outlines procedures for federal agencies to follow if actions may jeopardize listed species. Activities may not jeopardize the continued existence of any threatened or endangered species or destroy or adversely modify a critical habitat. | Potentially Applicable |

**Location-Specific**
**Applicable or Relevant and Appropriate Requirements**
**Sunset Mine, Washington**

| Standard, Requirement Criteria, or Limitation | Citation | Description | Applicable/Relevant and Appropriate? |
|---|---|---|---|
| **FEDERAL (continued)** | | | |
| National Forest Management Act (NFMA), Mt. Baker Snoqualmie NF Land and Resource Management Plan (LRMP, 1989), as amended by Pacific Northwest Forest Plan (NWFP, 1994) and subsequent amendments (2001, 2004, and 2007) | 16 USC §§ 1600-1614 | NFMA requires land management based on multiple-use, sustained-use yields. The LRMP and NWFP establish guidelines and standards for design, construction, and use of various actions on USFS land. | Potentially Applicable or Relevant and Appropriate |
| National Historic Preservation Act (NHPA) | 16 USC § 470;<br>36 CFR Part 800<br>40 CFR 6.301(b) | Requires federal agencies to take into account the effect of any federally assisted undertaking or licensing on any property with historic, architectural, archeological, or cultural value that is included in or eligible for inclusion in the National Register of Historic Places. | Potentially Applicable |
| Archaeological Resources Protection Act | 16 USC § 470 | Specifies actions that must be taken to preserve archaeological resources. | Potentially Applicable |
| Archeological and Historic Preservation Act (AHPA) | 16 USC § 469<br>40 CFR 6.301(c) | Establishes procedures to provide for preservation of significant scientific, prehistoric, historic, and archeological data that might be destroyed through alteration of terrain as a result of a federal construction project or a federally licensed activity or program. | Potentially Applicable |
| Historic Site, Buildings, Objects, and Antiquities Act | 16 USC § 461-467 | Requires preservation of historic sites, buildings, and objects of national significance. | Potentially Applicable |
| Native American Graves Protection and Reparation Act | 25 USC § 3001 et seq. | Establishes protective requirements to be followed when graves or Native American burial sites are encountered. | Potentially Applicable |
| The American Indian Religious Freedom Act (AIRFA) | 42 USC § 1996 | Requires federal agencies to protect the right of Indian tribes to practice their traditional religions. | Potentially Applicable |
| Wilderness Act | 16 USC §§ 1131-1136 | Established the National Wilderness Preservation System, which concerns leaving lands unimpaired for future use as a wilderness. | Potentially Applicable |

**Action-Specific**

**Applicable or Relevant and Appropriate Requirements**
**Sunset Mine, Washington**

| Standard, Requirement Criteria, or Limitation | Citation | Description | Applicable/Relevant and Appropriate? |
|---|---|---|---|
| **FEDERAL** | | | |
| Clean Water Act | 33 USC § 1342 | | |
| National Pollutant Discharge Elimination System | 40 CFR Part 122.26 | In general, Part 122 provides permit requirements for the discharge of pollutants from any point source into waters of the United States. Part 122.26 requires permits for storm-water discharges. | Potentially Applicable |
| CWA – Water Pollution Control Act (WPCA), Water Quality Certification | 33 USC § 1341, Section 401 | Requires certification from the state (WDOE) that discharges into navigable waters comply with applicable water quality standards. | Potentially Applicable |
| CWA/WPCA – National Pollution Discharge Elimination System (NPDES) | 33 USC § 1342, Section 402 | Establishes requirements for point source discharges and stormwater runoff. | Potentially Applicable |
| CWA/WPCA – Discharge of Dredge and Fill Materials | 33 USC § 1344, Section 404 | Regulates the discharge of dredge and fill into waters of the United States, including wetlands. | Potentially Applicable |
| Clean Air Act | 42 USC § 7401 et seq., 40 CFR Part 50 | Establishes limits for air emissions. | Potentially Applicable |
| Land Disposal Restrictions (LDRs) | 40 CFR Part 268 | LDRs place specific restrictions (conc. or trmt) on RCRA hazardous wastes prior to their placement in a land disposal unit. Relevant and appropriate LDR requirements will be met if any material accumulations are treated *ex situ*. | Applicable Requirement |
| RCRA Subtitle C – Hazardous Waste Management | 42 USC § 6901, 40 CFR Parts 260 to 279 | Specifies hazardous waste identification, management, and disposal requirements. | Potentially Applicable |
| Subtitle D – Managing Municipal and Solid Waste | 42 USC § 6901, 40 CFR Parts 257 and 258 | Establishes guidelines for the management of non-hazardous solid waste. | Potentially Applicable |
| Standards for Owners and Operators of Hazardous Waste Treatment, Storage, and Disposal (TSD) Facilities | 40 CFR Part 264.13.14 | Requirements for proper handling, treatment, storage, and disposal of hazardous wastes. | Potentially Applicable |
| Disposal of Solid Waste | 42 U.S.C. § 6901 et seq; 40 CFR 257 | Facility or practices in floodplains will not restrict flow of basic flood, reduce the temporary water storage capacity of the floodplain or otherwise result in a wash-out of solid waste. | Potentially Applicable |

**Action-Specific**
**Applicable or Relevant and Appropriate Requirements**
**Sunset Mine, Washington**

| Standard, Requirement Criteria, or Limitation | Citation | Description | Applicable/Relevant and Appropriate? |
|---|---|---|---|
| **FEDERAL (continued)** | | | |
| Closure Requirements | RCRA/HWMA 40 CFR & 264, Subpart G | Closure of hazardous waste repositories must meet protective standards. Regulations to minimize contaminant migration, provide leachate collection and prevent contaminant exposure will be met. | Potentially Applicable |
| Landfill Design and Construction | RCRA/HWMA 40 CFR & 264, Subpart N | Hazardous waste landfills must meet minimum design standards. Protectiveness will be achieved through capping and institutional controls. | Potentially Applicable |
| Groundwater Monitoring | RCRA/HWMA 40 CFR & 264, Subpart F 40 CFR & 264, Subpart X | Establishes standards for detection and compliance monitoring. Site wide monitoring will accommodate specific groundwater monitoring requirements. | Not Applicable or Relevant and Appropriate. Treatment of groundwater is outside the Removal Action scope. |
| Occupational Exposure to Asbestos | 29 CFR Parts 1910 and 1926. | Establishes OSHA requirements for asbestos-related work in the construction and demolition industry.<br><br>Requirements on exposure limits, work practices and engineering controls to provide worker safety in handling, removal, disposal, or other workplace exposure to asbestos. | Potentially Relevant and Appropriate |
| Superfund Remedial Design and Remedial Action Guidance | EPA OSWER Directive 9355.0-4A, June 1986 | Provides guidance for site remediation and the design of remedial action components. | To Be Considered |
| Hazardous Materials Transportation Act | 49 USC §§ 1801-1813<br>49 CFR Parts 10, 171-177 | Regulates transportation of hazardous materials. | Potentially Applicable |
| Surface Mining Control and Reclamation Act | 30 USC §§ 1201-1328 | Performance standards for surface mining activities. | Potentially Relevant and Appropriate |
| Indian Sacred Sites | Executive Order 13007 | Requires federal agencies to avoid physical damage to Indian sacred sites and to avoid interfering with access to such sites. | To Be Considered |
| Protection and Enhancement of the Cultural Environment | Executive Order 11593 | Directs federal agencies to nominate historic properties to the NRHP and treat properties that are eligible for the NRHP as though they were listed. | To Be Considered |

**Action-Specific**
**Applicable or Relevant and Appropriate Requirements**
**Sunset Mine, Washington**

| Standard, Requirement Criteria, or Limitation | Citation | Description | Applicable/Relevant and Appropriate? |
|---|---|---|---|
| **FEDERAL (continued)** | | | |
| Invasive Species | Executive Order 13112 | Requires federal agencies to prevent the introduction of invasive species. | To Be Considered |
| Migratory Bird Treaty Act (MBTA) | 16 USC §§ 703 et seq. | Establishes federal responsibility for the protection of the international migratory bird resource and requires continued consultation with the USFWS during remedial design and remedial construction to ensure that the cleanup of the site does not unnecessarily impact migratory birds. | Potentially Relevant and Appropriate |
| Responsibilities of Federal Agencies to Protect Migratory Birds | Executive Order 13186 | Requires federal agencies to avoid or minimize adverse impacts to migratory bird resources to the extent practical. | To Be Considered |

**Action-Specific**
**Applicable or Relevant and Appropriate Requirements**
**Sunset Mine, Washington**

| Standard, Requirement Criteria, or Limitation | Citation | Description | Applicable/Relevant and Appropriate? |
|---|---|---|---|
| **STATE OF WASHINGTON** | | | |
| MTCA | RCW 70.105D, WAC Chapter 173-340 | Establishes procedures and standards for investigating and cleaning up sites with hazardous substances present. | Potentially Applicable |
| Sediment Management Standards | WAC 173-204 | Establishes freshwater surface sediment management standards. | Potentially Relevant and Appropriate |
| Regulation and Licensing of Well Contractors and Operators | RCW 18.104, WAC Chapter 173-162 | Establishes procedures for well contractors and operators. | Potentially Applicable |
| Minimum Standards for Construction and Maintenance of Water Wells | RCW 18.104, WAC Chapter 173-160 | Sets minimum standards for the construction of water and monitoring wells, and well decommissioning. | Potentially Applicable |
| Hazardous Waste Management Act and Dangerous Waste Regulations | RCW 70.105, WAC Chapter 173-303 | Establishes regulations for the handling and deposition of dangerous waste, including identification, accumulation, storage, transport, treatment, and disposal. | Potentially Applicable – Washington has not adopted the Bevill Amendment for mining wastes. |
| Solids Waste Handling Standards | RCW 70.95, WAC Chapter 173-350 | Establishes standards for the proper handling and disposal of solid waste, and requirements for the design, construction, operation, and closure of solid waste handling facilities. | Potentially Applicable or Relevant and Appropriate |
| Hydraulic Code | RCW 77.55, WAC Chapter 220-110 | Requires a Hydraulics Project Approval permit for construction activities that use, divert, obstruct, or change the bed or flow of state waters. | Substantive provisions potentially Applicable |
| Shoreline Management Act (SMA) | RCW 90.58 | Established to prevent harm to the state's shorelines, including streams with a mean annual flow greater than 20 cubic feet per second. | Applicable Requirement |
| Fugitive Dust Emissions | 40 CFR Section 50.6 | Establishes standards for PM-10 | Applicable Requirement |
| Water Quality Standards for Surface Waters – Mixing Zones | RCW 90.48, WAC Chapter 173-201A-400 | Establishes mixing zone effluent limits for discharges to surface water. | Potentially Applicable |
| Water Quality Standards for Surface Waters – Short-term Modifications | RCW 90.48, WAC Chapter 173-201A-410 | Allows for short-term modification to water quality criteria for specific water bodies when necessary. | Potentially Applicable |
| Submission of Plans and Reports for Construction of Wastewater Treatment Facilities | RCW 90.48, WAC Chapter 173-240 | Requires submission of wastewater treatment systems designs to the WDOE for review and approval. | Potentially Applicable |

**Action-Specific**
**Applicable or Relevant and Appropriate Requirements**
**Sunset Mine, Washington**

| Standard, Requirement Criteria, or Limitation | Citation | Description | Applicable/Relevant and Appropriate? |
|---|---|---|---|
| **STATE OF WASHINGTON (continued)** | | | |
| Aquatic Lands Management | RCW 79.90, WAC Chapter 332-30 | Establishes criteria for the management of state-owned aquatic lands to promote uses and protect resources. | Potentially Applicable |
| Water Code and Regulation of Public Groundwater – Surface Water and Groundwater Withdrawal | RCW 90-90.03 and 90.44 | Specify criteria and procedures for appropriating surface water and groundwater for beneficial uses. | Potentially Applicable |
| Maximum Environmental Noise Levels | RCW-70.107, WAC Chapter 173-60 | Establishes maximum permissible noise levels. | Potentially Applicable |
| Washington Clean Air Act and Implementing Regulations | WAC Chapter 173-400-040(8) | Requires reasonable precautions be taken to prevent the generation of fugitive dust. | Potentially Relevant and Appropriate |
| General Regulations for Air Pollution Sources | RCW 70.94, WAC Chapter 173-400 | Regulates air pollution from contaminant sources, and establishes rules for the control and prevention of air contaminant emissions. | Potentially Applicable |