Caribou-Targhee NF

Caribou-Targhee NF
1405 Hollipark Dr.
Idaho Falls, ID 83401
(208) 557-5760

Final Environmental Impact Statement

Caribou Revised Forest Plan
Appendix B—Analysis Process

Table of Contents

Introduction *B-5*
Framework for the Planning Process *B-5*
RECREATION, ACCESS, AND SCENERY MANAGEMENT **B-9**
BASELINE INFORMATION B-9
A.1: Recreation Opportunity Spectrum (Ros) And Winter Recreation Mapping *B-9*
General Guidelines for Mapping *B-10*
A 2 Cross country motorized travel *B-12*
A 3 Motorized and Non-motorized Travel Opportunities *B-13*
SOCIAL AND ECONOMIC ENVIRONMENT **B-14**
BASELINE INFORMATION B-14
The Model *B-14*
ECONOMIC IMPACT EFFECTS ANALYSIS B-15
Fish and Wildlife *B-17*
Grazing *B-17*
Timber *B-18*
Phosphate Mining and Processing *B-18*
Federal Expenditures and Employment *B-19*
Revenue Sharing -- 25 Fund Payments *B-19*
Output Levels *B-19*
Financial and Economic Efficiency Analysis *B-20*
ECOSYSTEM MANAGEMENT **B-21**
INTRODUCTION B-21
ECOSYSTEM DISTURBANCES **B-21**
Introduction *B-21*
EM.1, 2 Hazard Ratings *B-22*
EM.3 Fire Condition Class *B-23*
Summary *B-29*
FORESTED VEGETATION DIVERSITY **B-30**
Introduction *B-30*
VEGETATION DYNAMICS B-30
Landscapes *B-33*
Vegetation Cover Types *B-34*
NON-FORESTED VEGETATION DIVERSITY **B-39**
Introduction *B-39*
Scale and Scope of Analysis *B-40*
EFFECTS ANALYSIS *B-41*
Long Term Analysis *B-47*
LIVESTOCK GRAZING **B-49**
NFMA CAPABILITY AND SUITABILITY B-49
Introduction *B-49*
Criteria and Process for Determining Rangeland Capability *B-49*
Criteria and Process for Determining SUITABILITY *B-51*
Potential Forage Output by Alternative *B-58*
LG3 Changes in Actual Used based on Current Management *B-61*
LG 4: Upland Vegetation Response to Grazing *B-63*
Wildlife Capacity Estimate *B-63*
MINERALS, RECLAMATION AND HAZARDOUS SUBSTANCES **B-64**
BASELINE INFORMATION B-64

Summary.....*B-64*
WATERSHED/RIPARIAN AREAS.....**B-65**
Effects of Alternatives on Soil, Watershed, Water Quality, Riparian and Aquatic Systems.....*B-65*
Scale of Analysis.....*B-65*
Resource Protection Methods and Best Management Practices.....*B-65*
Disturbance Activities.....*B-66*
Cumulative Effects.....*B-85*
Riparian.....*B-100*
Water Quality.....*B-100*
TIMBER PROGRAM.....**B-101**
AVAILABLE AND CAPABLE TIMBERLANDS.....B-101
Timber Suitability.....*B-101*
Estimation of Timber Volume.....*B-107*
Estimation of Allowable Sale Quantity (ASQ).....*B-109*
Estimation of Total Sale Program Quantity (TSPQ).....*B-110*
ROADLESS AREA MANAGEMENT AND RECOMMENDED WILDERNESS.....**B-113**
WILDLIFE HABITAT MANAGEMENT.....**B-113**
AIR QUALITY.....**B-114**
Smoke Analysis (PM10) in Timber/Mixed Conifers/Aspen.....*B-114*
PM 2.5 Portion of Total PM_{10} in Timber/Mixed Conifer/Aspen.....*B-115*
Smoke Analysis – PM_{10} in Sagebrush/Mountain Shrub.....*B-117*
Smoke Analysis – $PM_{2.5}$ Portion of PM_{10} in Sagebrush/Mountain Shrub.....*B-119*

Table of Tables

- Table B. 1. Counties Included in the Caribou IMPLAN Model.....B-14
- Table B. 2. Sector Aggregation Used Separate Forest Related Industries.....B-15
- Table B. 3. RVD Conversion Factors—Recreation.....B-16
- Table B. 4. RVD Conversion Factors—Wildlife and Fish.....B-17
- Table B. 5. Economic Benefits and Financial Revenue Values in 2000 Dollars.....B-20
- Table B. 6 Estimated Acres Affected by Human-Induced Disturbance Annually Short-Term (10 Years).....B-21
- Table B. 7 Estimated Acres Affected by Human-Induced Disturbance Annually Long-Term (100 Years).....B-21
- Table B. 8 Coarse-scale Fire Condition Class Descriptions.....B-23
- Table B. 9 How Vegetation Types were classified into standard Fire Groups and Regimes.....B-24
- Table B. 10 Estimated Percentage of Vegetation in Condition Class 3.....B-25
- Table B. 11. Steps and Data Sources for Assessing Tentatively Suited Lands.....B-35
- Table B. 12. Conifer Acres and Percent Mature and Old by Decade.....B-36
- Table B. 13 Outcomes by Alternative for Non-Forested Vegetation.....B-39
- Table B. 14 Summary of Range Capability/Suitability Matrix for Cattle.....B-54
- Table B. 15 Summary of Range Capability/Suitability Matrix for Sheep.....B-56
- Table B. 16 Changes in Suitable Cattle Acres by Alternative.....B-58
- Table B. 17 Changes in Suitable Sheep Acres by Alternative.....B-58
- Table B. 18 Potential Production by Community Type.....B-59
- Table B. 19 Potential Forage Production Output by Alternative.....B-59
- Table B. 20.....B-60
- Table B. 21 Estimated Potential Change in Current Cattle Animal Unit Months (AUMs) based on current management by Alternative.....B-62
- Table B. 22 Estimated Potential Change in Current Sheep Animal Unit Months (AUMs) based on current management by Alternative.....B-63
- Table B. 23 Estimated Herbaceous Forage Potentially Available for Wildlife on Suitable Range by Alternative..B-63

- Table B. 24 Alternative 1 ..... B-67
- Table B. 25 Alternative 2 ..... B-68
- Table B. 26 Alternative 3 ..... B-69
- Table B. 27 Alternative 4 ..... B-70
- Table B. 28 Alternative 5 ..... B-71
- Table B. 29 Alternative 6 ..... B-72
- Table B. 30 Alternative 7 ..... B-73
- Table B. 31 Alternative 7R B-74
- Table B. 32 Summary of watershed disturbance from timber harvest B-75
- Table B. 33 Summary of watershed disturbance by motorized recreation B-76
- Table B. 34 Alternative 1 - (130,000 acres treated) B-77
- Table B. 35 Alternative 2 - (94,900 acres treated) B-78
- Table B. 36 Alternative 3 – (119,900 acres treated) B-79
- Table B. 37 Alternative 4 – (127,400 acres treated) B-80
- Table B. 38 Alternative 5 – (90,000 acres treated) B-81
- Table B. 39 Alternative 6 – (80,800 acres treated) B-82
- Table B. 40 Alternative 7 – (106,800 acres treated) B-83
- Table B. 41 Alternative 7R – (78,000 acres treated) B-84
- Table B. 42 Summary of impacts to watersheds B-85
- Table B. 43 Alternative 1 ..... B-85
- Table B. 44 Alternative 2 ..... B-86
- Table B. 45 Alternative 3 ..... B-88
- Table B. 46 Alternative 4 ..... B-89
- Table B. 47 Alternative 5 ..... B-90
- Table B. 48 Alternative 6 ..... B-91
- Table B. 49 Alternative 7 ..... B-92
- Table B. 50 Alternative 7R B-93
- Table B. 51 Summary of Cumulative Effects on Watersheds by Alternative B-94
- Table B. 52 Existing Conditions within 5th Code Watersheds B-95
- Table B. 53 Proposed Timber Harvesting by 5th Code Watersheds by Alternative Within the 5.x Prescription Areas. B-99
- Table B. 54 Land Classification List (NFMA Regulations) B-102
- Table B. 55 Results of filtering process for suitability B-107
- Table B. 56. Budget Levels by Alternative and Other Outcomes B-108
- Table B. 57 ASQ Acres - Vegetation Management Practices Annual Estimated Harvest Acres in 1st Decade from Suitable Lands B-109
- Table B. 58 ASQ Volume - Summary of Allowable Sale Quantity B-110
- Table B. 59 Summary of Total Sale Program Quantity B-111
- Table B. 60 Summary of Total Sale Program Quantity B-111

Appendix B

Analysis Process

Process Used for Analysis of Effects of the Revised Forest Plan FEIS

Methods used by Forest resource specialists to gather and measure baseline information and analyze effects of the alternatives on their resource area.

INTRODUCTION

The basic analytical framework for the revision of the Caribou Forest Plan is prescribed in the NEPA process. A set of alternative scenarios, representing different approaches to the identified needs for change, is simulated over time to provide information that can be used to compare and contrast those alternatives in terms of their ability to achieve the Desired Future Conditions (DFC). Analyzing the effects of the alternatives includes evaluation of vegetation dynamics, economics, wildlife habitat and species viability, scenery management, and commodity production.

This appendix describes the analysis process and techniques used by the interdisciplinary team during the management plan revision process. It contains the following:

- The framework for the planning process.
- A discussion of the data sources and assumptions made.
- A discussion of the various analytical tools and methods used.

The planning administrative record is an additional source of information used to develop this appendix and is incorporated by reference. The planning process is a very complex one. The complexity stems from the need to address a variety of interrelated and often conflicting issues by allocating land and scheduling activities in a cost-effective manner for the entire Forest over a long period of time. This appendix describes some of the analytical tools used to reduce the process to manageable proportions.

The size of the analysis area and the number of issues being addressed made the alternative development process and effects analyses complicated. The planning area contains more than one million acres in southeastern Idaho, western Wyoming and northern Utah.

FRAMEWORK FOR THE PLANNING PROCESS

The revision of a Forest Plan is guided by the general planning process described in 36 CFR 219.12. This section describes ten steps, which lead from the completion of a Forest Plan to the completion of a revised Forest Plan.

Land and resource management plans (management plans) currently direct management of the Caribou National Forest and the Ranger District units. The first Forest Plan was signed in September 1985.

STEP 10. (STEP 10 OF THE INITIAL PLANNING PROCESS) MONITORING AND EVALUATION

The last step of the initial Forest Plan process is the first step in revising a Forest Plan. Monitoring and evaluation reports were completed in 1991, 1997, and 2000 for the Caribou National Forest, an administrative unit of the Caribou-Targhee National Forest. Essentially, these evaluations summarized monitoring data and reviewed trends in Forest Plan implementation.

Revision of management plans is directed by the National Forest Management Act (NFMA), regulations 36 CFR 219 and the Forest Service Directives System (FSH 1909.12). A revised Management Plan and a Final Environmental Impact Statement describing environmental effects for the Caribou National Forest have been completed and are available for public review.

STEP 1. IDENTIFICATION OF PURPOSE AND NEED

Many sources were used to identify the need for change in management on the Caribou National Forest. Some principal sources included the following:

- Experiences in implementing the current Forest Plan and working with the public.
- Public involvement in implementing projects.
- Need for management plan amendments as a result of implementing projects.
- Monitoring and the effects of implementation.
- Understanding cumulative effects from implementing projects.
- Issues raised in appeals and litigation.
- Knowledge gained from research on management activities and uses.
- Discussions with employees.
- Coordination and input from other federal and state agencies, local city and county governments, and partners.
- Public feedback on values for the Caribou National Forest.
- Results of assessments.
- Changes in management philosophy for National Forest System lands.

From these sources, the Forest Service developed the Purpose and Need for Change and defined the major revision topics.

STEP 2. PLANNING CRITERIA

During this step the remainder of the process is outlined. Here the major revision topics were developed along with indicators for each issue. These provided focus for the rest of the analysis.

STEP 3. INVENTORY DATA AND INFORMATION COLLECTION

Numerous data sources were used, stored, and analyzed on many different computer systems. The majority of the data used was spatial and stored on the corporate IBM UNIX system in Arc/Info.

Several non-spatial databases were stored on personal computers using Microsoft Excel as the data management software. This information is primarily non-spatially related data.

STEP 4. ANALYSIS OF THE MANAGEMENT SITUATION (AMS)

This step determines the ability of the planning area to supply goods and services in response to society's demands. It provides background information for formulating a broad range of reasonable alternatives. In April 1999 the Forest released the ***Initial Analysis of the Management Situation Report*** for public review and comment. Included in the report were the Needs for Change in Management, a Range of Desired Future Conditions to be achieved, and a baseline report for various resources on the Forest.

The Forest received 57 comment letters from the public on the findings disclosed in the AMS. These comments were incorporated into the public scoping process and were considered in developing the Proposed Action and action alternatives to the proposed action.

In August 1999 the Forest Service published a Notice of Intent to Prepare an Environmental Impact Statement (DEIS) in the **Federal Register**. The federal notice initiated the formal public involvement process. In response to the federal notice and many other public outreach efforts, the Forest Service received public comments to help further define the major revision topics. Several additional revision topics were identified during this process. Much of the work originally completed in the AMS was updated and incorporated into this FEIS

STEP 5. FORMULATION OF ALTERNATIVES

See Chapter 1 of the FEIS for a discussion about the significant planning issues that drove the formulation of alternatives. See Chapter 2 of the FEIS for a discussion of each alternative considered in detail.

STEP 6. ESTIMATED EFFECTS OF ALTERNATIVES

The physical, biological, economic, and social effects of implementing each alternative considered in detail were estimated and compared according to NEPA procedures. See Chapter 4 of the FEIS.

STEP 7. EVALUATION OF ALTERNATIVES

Significant physical, biological, economic and social effects of implementing alternatives were evaluated by the Interdisciplinary Team and the Forest management team. Using a decision-making protocol, a selected alternative was identified in the Record of Decision.

STEP 8. PREFERRED ALTERNATIVE RECOMMENDATION

The Regional Forester reviewed the Forest Supervisor and Interdisciplinary Team's evaluation and recommendation and identified Alternative 7 as the preferred alternative in the Revised Management Plan and Draft Environmental Impact statement. The DEIS was released in May 2001 and made available for public review. Following the public review period, the Interdisciplinary Team evaluated agency and public comments, and revise steps 5-7 as needed to address DEIS comments. In response to those comments, the IDT created a new alternative crafted from those released in the Draft EIS. This new alternative, 7R, has been incorporated into the Final EIS and was recommended for selection. The Regional Forester reviewed the Forest Leadership Team's recommendation and Interdisciplinary Team's evaluation and made the final selection of the alternative to be implemented.

STEP 9. PLAN APPROVAL AND IMPLEMENTATION

The Regional Forester reviewed the Revised Forest Plan and Final Environmental Impact Statement (FEIS) for a final decision. A Record of Decision (ROD) has been completed.

STEP 10. (STEP 10 OF THE INITIAL PLANNING PROCESS) MONITORING AND EVALUATION

Repeat monitoring and evaluation.

Issue 1

Recreation, Access, and Scenery Management

Baseline Information

A.1: RECREATION OPPORTUNITY SPECTRUM (ROS) AND WINTER RECREATION MAPPING

Recreation Opportunity Spectrum (ROS) mapping is used as a primary tool to help define and allocate different alternatives for summer and winter recreation. For summer use, ROS was mapped, with some modification of the original criteria as defined (Forest Service, ROS Book, 1986). For winter recreation, the primary intent of mapping was to distinguish between areas allocated for motorized and non-motorized winter activities. This section describes how maps showing summer ROS and winter recreation were developed. It was decided not to use ROS as a tool to determine use capacities at this time.

SUMMER ROS MAPPING

Initially a current condition ROS map was developed using ROS as true to the ROS Book as possible. The current conditions map was used as a baseline for developing Summer ROS and Winter Recreation maps for each alternative. The initial GIS base maps for existing condition were created using ROS criteria as described in the 1986 ROS book. Criteria descriptions are as follows.

Remoteness Criteria

Primitive (P) - 3 miles from all roads, railroads, and motorized trails.

Semi-Primitive Non-Motorized (SPNM) - areas less than 3 miles and more than .5 mile from all roads, railroads, and motorized trails.

Semi-Primitive Motorized (SPM) - .5 mile buffer on all roads in maintenance classes 0, 3, 4, and 5 ("better than primitive").

Roaded Modified (RM) and Roaded Natural (RN) - .5 mile buffer on all roads in maintenance classes 1 and 2 ("primitive").

Size Criteria

Wilderness/Primitive - Areas must be 5,000 acres or more.

SPNM, SPM - Generally, polygons should be 2,500 to 5,000 acres. The original 1985 ROS mapping included some areas as small as 800 acres. These areas were retained in the inventory. Many of these areas are screened by vegetation or topography, creating a "buffer" from surrounding development and some offer important non-motorized settings for local recreationists.

Evidence of Humans Criteria

The following Forest GIS facility layers were overlaid to show presence of human developments. Generally, P, SPNM, and SPM classes are not present in areas covered by these layers.

devrec includes campgrounds, trailheads, etc.

sua means special use area.
utl means utility lines.

Based on review and adjustment from local knowledge, current condition maps were produced. (In general accordance with the ROS Book, buffers placed on roads, etc. were altered in some areas due "local topographic relief and vegetative cover and natural barriers and screening" (PG IV-6 ROS Book, 1986). The following classes in ROS were mapped for summer:

Primitive
SPNM Semi-Primitive Non-Motorized
SPM Semi-Primitive Motorized
RM Roaded-Modified
RN Roaded-Natural

WINTER RECREATION MAPPING

For the analysis, winter, or the snow-free season, has been defined as having 12" or more of snow on the ground. Thus, the Winter or snow season ROS applies only when this general condition is met, and at other times the Summer, or snow-free ROS apply. Two Winter Recreation Classes were created:

Semi-Primitive Non-Motorized (winter SPNM) – These areas emphasize non-motorized winter recreation such as x-country skiing, snow shoeing, tubing, etc., no snowmobiles or other motorized vehicles are allowed.

Semi-Primitive Motorized – Snowmobiling is permitted in these areas and/or on designated routes. Non-motorized uses are also permitted here.

It was determined that application of the full range of the Recreation Opportunity Spectrum to mapping winter activities did not work well. There are substantial differences in settings when areas are covered in snow. The resulting change to the character of roads and facilities and access, and appropriateness of motorized or non-motorized uses in certain areas of the Forest, made application of the full ROS categories to winter settings impractical. It was determined that mapping of Winter Recreation opportunities would answer two questions related to the decisions to be made:

1. Where can I snowmobile?
2. Where can I have a non-motorized winter experience?

While only two basic ROS classes are presented in the Winter Recreation maps, the process for mapping for Winter Recreation used ROS criteria, with the exception of "remoteness". The road "buffer" rules do not uniformly apply to winter recreation settings. Considerable adjustments were made to these maps based on the travel plan.

GENERAL GUIDELINES FOR MAPPING

Most 2.2 management prescriptions will be semi-primitive non-motorized in nature. Management Prescriptions 2.1.2, 4.2, 4.3, 5.1, and 8.x will generally have a motorized access classification applied to them. (SPM, RM or RN) In all alternatives, facility development is allowed if consistent with ROS setting and prescription direction.

ALTERNATIVE 1 (1985 FOREST PLAN ROS)

Summer

This alternative retains current management of Summer or snow-free ROS allocations. Alternative One's ROS allocation depicts existing condition and is based on the current Travel Map and existing levels of area developments. Alternative One's Summer ROS maps were used as a baseline to develop the other alternatives' Summer ROS allocations, i.e. working from known conditions to potential new recreation allocations. Summer ROS acres for

Alternative One may not include small areas currently managed as non-motorized. Prescription mapping was not done on a fine enough scale to "capture" small area closures or restrictions.

Winter

This alternative retains current management of Winter or snow season ROS allocations. Alternative One's Winter ROS allocation depicts existing condition and is based on the current Travel Map's snow-season management. Alternative One's Winter ROS maps were used as a baseline to develop the other alternatives' Winter ROS allocations-i.e. working from known conditions to potential new recreation allocations. Winter ROS acres for Alternative One may not include small areas currently managed as non-motorized. Prescription mapping was not done in a fine enough scale to "capture" small area closures or restrictions.

ALTERNATIVE 2

Summer

This alternative also retains current management of summer or snow-free ROS allocations.

Winter

This alternative reflects existing winter or snow season ROS allocations, with the exception of restrictions concerning Winter Range. Winter Range prescription areas were changed or increased under this alternative, changing winter ROS allocations from SPM to SPNM.

ALTERNATIVE 3

Summer

This alternative increases SPM summer allocations. Toponce, Caribou Mountain and Mt. Naomi SPNM areas change to SPM management. With this change, the Primitive area of Caribou Mountain, no longer qualifies as Primitive, due to the lack of a SPNM buffer.

Winter

This alternative proposes increasing SPM Winter ROS allocations, with the exception of restrictions in Winter Range. The Mt. Naomi SPNM area changes to SPM during the winter.

ALTERNATIVE 4

Summer

This alternative increases SPNM summer allocations and decreases SPM allocations. Much of the increase in SPNM acres is due to restricting motorized use to designated routes.

Winter

This alternative proposes increasing SPNM Winter ROS allocations, but many of these SPMN acres restrict human use to designated routes in areas of critical winter range.

ALTERNATIVE 5

Summer

This alternative emphasizes recreation development in RN and SPM areas. SPNM summer allocations are increased, decreasing SPM areas. Much of the increase in SPNM acres is due to restricting motorized use to designated routes and managing additional areas as non-motorized.

Winter

This alternative proposes increasing SPNM Winter ROS allocations, but many of these SPMN acres restrict human use to designated routes in areas of critical winter range.

ALTERNATIVE 6

Summer

This alternative increases SPNM summer allocations and decreases SPM allocations.

Winter

This alternative proposes increasing SPNM Winter ROS allocations.

ALTERNATIVE 7

Summer

This alternative increases SPNM summer allocations and decreases SPM allocations. Much of the increase in SPNM acres is due to restricting motorized use to designated routes.

Winter

This alternative proposes increasing SPNM Winter ROS allocations, but many of these SPMN acres restrict human use to designated routes in areas of critical winter range.

ALTERNATIVE 7R

Summer

This alternative increases SPNM summer allocations and decreases SPM allocations. Much of the increase in SPNM acres is due to restricting motorized use to designated routes.

Winter

This alternative proposes increasing SPNM Winter ROS allocations.

A 2 CROSS COUNTRY MOTORIZED TRAVEL

For this indicator, GIS calculations were made to determine the acres open to cross country motorized travel. For all alternatives, the acres on prescription maps with the access code “c” were tallied.

A 3 MOTORIZED AND NON-MOTORIZED TRAVEL OPPORTUNITIES

For the analysis, the GIS travel layer was used. This layer shows more motorized routes than are on the current travel plan since approximately 40 percent of the Forest is currently open to cross country motorized use and there are few designated routes in those areas. The IDT and Districts determined which motorized routes were open based on actual use of these "user-created" roads and trails. Map 10 in the Plan map package shows the existing condition and our best assessment of effectively open roads and trails. This map does not match the 2002 Travel Plan.

As discussed above, the analysis map does not match the Travel Plan map because few routes are actually "designated" in areas open to cross-country travel in the 1985 Plan. Furthermore, the Forest Plan analysis maps are at a larger scale than the travel plan therefore they are more accurate and depict roads and trails indiscernible at the smaller scale. The GIS maps are also based on spatial features rather than being a cartographic production.

To determine the changes for this indicator, the prescription areas and their corresponding road density were overlaid on the GIS road/trail layer. The ArcView program then calculated the actual route density in each polygon and compared that with the density standard. In polygons that exceeded their density standard, the actual miles of routes that would need to be closed in order to meet it were determined. These were added for each polygon by alternative to derive the total miles of routes which would likely need to be closed in order to meet the road densities for each alternative.

No determination was made of which roads and/or trails would need to be closed nor what methods would be used to close them. Those decisions will be made at a more site-specific level during travel plan updates.

Issue 2

Social and Economic Environment

Baseline Information

THE MODEL

Economic effects to local counties were estimated using an economic input-output model developed with IMPLAN Professional 2.0 (IMPLAN). IMPLAN is a software package for personal computers that uses the latest national input-output tables from the Bureau of Economic Analysis, secondary economic data at the county level from a variety of public sources, and proprietary procedures to develop an input-output model for a study area. The process and software were originally developed by the USDA-Forest Service and are now the property of the Minnesota IMPLAN Group (MIG, Inc.). All IMPLAN models were developed using 1997 data. These were the most recent data available at the time of model development.

IMPLAN is the accepted software that the Forest Service employs for forest plan economic analysis. Input to the IMPLAN program is organized in standardized Microsoft Excel spreadsheets, which have been prepared for agency-wide use by a team of Forest Service economists (FEAST Spreadsheets, Niccolucci, 12/14/2000). The Quicksilver ™program was used for the required present net value analysis. Technical assistance and advice in using these programs and in the development of models and the scope of the analysis was provided by personnel from Forest Service Regional Offices in Ogden and Denver, and by the Forest Service's Inventory and Monitoring Institute in Fort Collins, Colorado.

The Caribou National Forest model includes eleven of the counties surrounding the Forest. This represents the functioning economy of the region. People from all around the Caribou travel within the area for much of their goods and services and travel to the Forest for their recreation activities. In the Caribou model, only people coming from outside the eleven12 county areas were considered non-residents. Non-resident spending activity is considered an export of local resources and is counted as economic impact while local spending is considered a contribution to the economy, but not an increase of total spending to the area.
A map of the model area can be found in the Social and Economic section in Chapter 3.

Counties included in Caribou National Forest IMPLAN model are displayed in the table below.

• *Table B. 1. Counties Included in the Caribou IMPLAN Model.*

County	State	County	State
Bannock	Idaho	Oneida	Idaho
Bear Lake	Idaho	Power	Idaho
Bingham	Idaho	Box Elder	Utah
Bonneville	Idaho	Cache	Utah
Caribou	Idaho	Rich	Utah
Franklin	Idaho	Lincoln	Wyoming

ECONOMIC ENVIRONMENT

The description of the economic environment examines the contribution that forest related industries make to industry output and employment within the analysis area. Specific IMPLAN sectors were selected as a proxy, or representation

of the forest resource-related industries of interest in Forest planning. The following table illustrates the sectors selected are displayed in the following table, grouped by the forest resource-related industries they represent.

• *Table B. 2. Sector Aggregation Used Separate Forest Related Industries.*

Sector	Forest Resource-Related Industry
Recreation and Tourism Support	
454	Eating and Drinking
463	Hotel and Lodging
488	Amusement and Recreation Services
Wood Products	
133	Logging Camps and Logging Operations
134	Sawmills and Planning Mills
Mining	
044	Phosphate Rock
202044	Phosphate ProcessingRock
Grazing	
004	Cattle grazing
006	Sheep and goat grazing

The results of the contribution analysis are an estimate of employment and income related to Caribou National Forest resources. The analysis illustrates the relative importance of the Caribou National Forest activity within the analysis area.

Economic Impact Effects Analysis

Economic impact analysis describes what happens when a change in final sales (e.g. exports and consumer purchases) occurs for goods and services in the analysis area. Changes in final sales are the result of multiplying units of production (e.g., one hundred cubic feet of timber harvest or recreation visitor days [RVDs] of recreation use) multiplied by sales per unit. Economic impacts were estimated using the best available production and sales data. The sources of each are listed below.

Impacts to local economies are measured in two ways: employment and labor income. Employment is expressed in jobs. A job can be seasonal or year-round, full-time or part-time. The number of jobs is computed by averaging monthly employment data from state sources over one year. The income measure used was labor income expressed in 2000 dollars. Labor income includes both employee compensation (pay plus benefits) and proprietor income (e.g. profits by self-employed).

The analysis area model was used to determine the employment and income consequences throughout the economy of one-million-dollar changes for each kind of resource impact. The results are called response coefficients. Because input-output models are linear, multipliers or response coefficients need only be calculated once per model and then applied to the direct change in output. Spreadsheets were used to calculate total effects by multiplying the response coefficients by estimated levels of dollar activity. A customized Excel workbook called FEAST (Forest Economic Analysis Spreadsheet Tool) was developed and used for this purpose. Details of FEAST may be examined in the Project File. Specifications for developing response coefficients and levels of dollar activity are stated below.

EXPENDITURE DATA

Visitors to the National Forests in Idaho often engage in a variety of activities during a trip. Six recreation categories were considered for the DEIS to compare between alternatives. Expenditure data was obtained from Public Area Recreation Visitor Surveys (PARVS) conducted from 1985 through 1987 and combined with data from approximately 5,100 customer surveys conducted on fifty-five Forest Service Ranger Districts from 1988 to 1996. These recreation expenditure profiles were incorporated into the model for the recreation categories.

Recreation use numbers were based on 1993 RIS-RIM (Recreation Information System-Recreation Information Management) numbers and adjusted through discussions and consensus among the Recreation Specialists from the Ranger Districts and Supervisor's office. The percentage of use from outside the model area, non-residents, for the six categories was estimated by recreation specialist based on Hunt, et al, 1995, and professional judgment.

The PARVS expenditure profiles were adjusted to use Regional Purchase Coefficients (RPCs) to estimate the amount of local spending in both rural and urban models. PARVS resident data reflects expenditures by persons within a fifty50-mile radius of the analysis area. Non-resident data reflects expenditures by persons traveling to the analysis area from more than fifty50 miles away. All PARVS expenditure profiles were normalized to allow for response coefficients calculations. For specific expenditure information, refer to the FEAST and IMPLAN outputs in the planning record.

The unit of measure used to estimate recreation use was Recreation Visitor Days (RVD). One RVD is equal to twelve12 hours of a given activity for one person. However, most people do not participate in one recreation activity for a full twelve-hour day. Since the PARVS expenditure data is expressed in dollars per person per day/visit, it was necessary to convert the RVD data into the equivalent number of visits in order to more accurately estimate visitor expenditures. The assumptions used for the conversion of RVDs to visits are detailed in the following table:

• *Table B. 3. RVD Conversion Factors—Recreation.*

Activity Category	Average Duration of Activity per Visit	RVD Conversion Factor
Camping, picnicking, swimming	3.63 hours	2.73.31
Mechanized travel and viewing	2.63 hours	7.14.56
Hiking, horseback riding and water sports	4.17 hours	3.22.88
Winter sports	4.40 hours	4.32.73
Resorts, cabins, organization camps	10.07 hours	1.01.19
Other recreation	3.00 hours	3.04.00

Source: USDA Forest Service, 1981.

The ‘Camping, Picnicking, & Swimming’ category includes all camping and picnicking activities. ‘Mechanized Travel & Viewing’ includes all biking, snow machines, OHV use, driving for pleasure and scenic viewing activity. ‘Hiking, Horseback Riding & Water Travel’ includes all hiking, water sports, motor boating, mountain climbing, and horseback riding occurring on the Forest. The ‘Winter Sports’ category includes cross-country and downhill skiing and snow play. The “Resorts, Cabins, and Organization Camps” category includes all special use permits for lodges and large group overnight use. All other types of recreation are included in the ‘Other recreation’ category. Snowmobiling expenditures and trips were also modeled using recent survey information from Utah.

USE OF THE MODEL

One million dollars of expenditures for the categories of recreation discussed above were input into the IMPLAN model. The results were then incorporated into the FEAST workbook where they were multiplied by total expenditures for each recreation category. Only non-local recreation expenditures (tourism export) use was considered in the impact analysis.

FISH AND WILDLIFE

EXPENDITURE DATA

The U.S. Fish & Wildlife Service (USFWS) periodically conducts a national survey to obtain, among other information, data on expenditures for hunting, fishing, and other wildlife-related recreation. This information is available by state. The Forest Service Inventory and Monitoring Institute organized these expenditures profiles for use in IMPLAN. Expenditures were collected on a "per trip" basis, but converted to a person-day basis for use in IMPLAN. Expenditure profiles for resident expenditures in Idaho were used for estimating impacts from wildlife-related recreation.

The USFWS expenditure profiles were adjusted to use RPCs (Regional Purchase Coefficients) to reflect local spending in the IMPLAN model. As with the recreation expenditure profiles, resident data reflects expenditures by persons within a 50-mile radius of the analysis area and non-residents are from outside the 50-mile radius. All USFWS expenditure profiles were normalized to allow for response coefficients calculations.

Use data for general hunting, general fishing and non-consumptive wildlife use are basedon 1996 RIM numbers and adjusted through discussion and consensus. The percentage of use by non-residents was developed by the forest Recreation Specialists from Hunt, et al, 1995, and professional judgment. To use the USFWS per visit expenditure profiles, the use units had to be converted into visits. The conversion factors used are highlighted in the following table.

• *Table B. 4. RVD Conversion Factors—Wildlife and Fish.*

Activity Category	Average Duration of Activity per Day	RVD Conversion Factor
General hunting	7.1 hours	1.71.69
General fishing	4.3 hours	2.82.79
Non consumptive wildlife	3.0 hours	4.04.00

Source: U.S.D.A Forest Service, 1981.

USE OF THE MODEL

One million dollars of expenditures for the three categories of wildlife and fish discussed above were input into the IMPLAN model. The results were then incorporated into the FEAST workbook where they were multiplied by total expenditures for each category. Only non-local recreation expenditures (tourism export) use is considered in the impact analysis.

GRAZING

EXPENDITURE DATA

Marketing and inventory data was obtained from The Oregon State University Government Information Sharing Project web site, "Census of Agriculture: 1987, 1992, 1997." The State's total marketing income for cattle and sheep was divided by the total inventories for the same in order to develop an estimated value per animal and then a value per Animal Unit Month (AUM). An AUM is the amount of forage needed to sustain one cow or approximately five sheep

for one month. Forest grazing use was estimated based on the number of AUMs currently permitted. Through the FEAST workbook, this data was multiplied by the value determined above to calculate the value of the grazing that occurs on the Forest.

USE OF MODEL

One million dollars of exports were input into the IMPLAN model through the range fed cattle and sheep, lambs, and goat sectors to determine RPCs. These RPCs were then applied to the value of the livestock grazed on the National Forest to estimate the total economic impact. Details of distribution estimates are available in FEAST, which is located in the project record.

TIMBER

EXPENDITURE DATA

Logging, sawmills and fuel wood where identified as the majority of uses for Caribou National Forest System stumpage. Employment in the lumber and wood products industry was estimated through the IMPLAN model. Details of distribution estimates are available in FEAST, which is located in the project record.

Timber volumes and revenues for the current situation were based on the average harvest volumes and stumpage revenues for 1998, 1999, and 2000. Volume estimates for each of the alternatives were developed based on vegetation modeling and historic management levels on the forest during the last planning period.

USE OF MODEL

One million dollars of stumpage exports were modeled through each timber-processing sector to determine a "response coefficient." Timber volume from the National Forests was multiplied by historical stumpage prices and multiplied by the response coefficient for "Logging Camps" to obtain the total economic impact. The distribution of National Forest timber processors and model relationships between "Logging Camps" and other sectors were used to derive the export value for each timber sector. This value was then multiplied by the appropriate response coefficient to determine total economic impact for each sector. All results were then summed for presentation in the FDEIS. This process was repeated for each alternative.

PHOSPHATE MINING AND PROCESSING

EXPENDITURE DATA

Phosphate mining and processing where identified as significant uses of Caribou National Forest System. Employment in the phosphate industry was estimated through the IMPLAN model. Details of distribution estimates are available in FEAST, which is located in the project record.

Phosphate volumes and revenues for the current situation were based on the average levels processed and revenues collected. Volume estimates for continued production are the same for all alternatives and were developed based on management of the forest throughout the planning period and continued demand and production in the area.

USE OF THE MODEL

One million dollars of phosphate exports were modeled through the mining and processing sectors to determine a "response coefficient." This value was then multiplied by the estimated future output to determine total economic impact for each sector. All results were then summed for presentation in the FEIS.

FEDERAL EXPENDITURES AND EMPLOYMENT

EXPENDITURE DATA

The Forest applied budget constraints to every alternative. This budget constraint was used to estimate total Forest expenditures, some of which had local economic effects. Total Forest obligations by budget object code were obtained for actual expenditures in 2000 from the National Finance Center. This data was used to estimate how the budget would be spent between programs. Details regarding the expenditures may be found in the project record. Forest Service employment was estimated by Forest staff based on current organizational charts and projections of future staffing levels based on expected workloads and budgets.

USE OF THE MODEL

To obtain an estimate of total impacts from Forest Service spending, salary and non-salary portions of the impact were handled separately. Non-salary expenditures were determined by using the budget object code information noted above. This profile was input into the IMPLAN model for non-salary expenditures for one million dollar expenditure, and the results multiplied by total Forest non-salary expenditures. Sales to the Federal Government are treated in the same manner as exports, money coming from outside the model area.

Salary impacts result from Forest employees spending a portion of their salaries locally. IMPLAN includes a profile of personal consumption expenditures for several income categories; the average compensation for an employee on the Caribou National Forest fell in the category of $40,000-$49,999. Across the U.S., Americans typically spend about 67 percent of their total salary plus benefits. Therefore, total Forest Service salaries were multiplied by 0.67 before being multiplied by the one million dollar response coefficient.

REVENUE SHARING -- 25 FUND PAYMENTS

EXPENDITURE DATA

Historically, Federal law has required that 25 percent of current or historical revenues be returned to the States and Counties within which the revenues were received. These payments may be used for a variety of purposes, including schools and roads. The *Secure Rural Schools and Community Self-Determination Act of 2000* provides a new formula for computing annual payments which is based on averaging a state's three highest payments between 1986 through 1999 to arrive at a compensation allotment or "full payment amount." All counties in the analysis area, except Rich County, Utah, selected stable payments. For the purposes of this analysis it was assumed that payment would be returned to the local impact area 25 percent of all National Forest revenues would be returned to the local impact area, and that a split of 50 percent for schools and 50 percent for roads would represent how local governments spend these revenues. A profile of expenditures for each of these purposes was derived from the model itself. Details regarding the expenditures may be found in the project record

USE OF THE MODEL

The national expenditure profile for state/local government education (schools) and estimates for road construction (roads) are provided within IMPLAN. One million dollars of each profile was used to obtain an estimated response coefficient for these Forest Service payments to the analysis area counties. The results were then incorporated into the FEAST where they were multiplied by total expenditures. Sales to local government are treated in the same manner as exports.

OUTPUT LEVELS

Output levels are specified in the FEAST Excel workbook, located in the Project File and in each individual resource section of this FEIS.

FINANCIAL AND ECONOMIC EFFICIENCY ANALYSIS

NET PUBLIC BENEFITS

Net public benefits are the "overall long-term value, to the nation, of all outputs and positive effects (benefits) less all associated Forest inputs and negative effects (costs) whether they can be quantitatively valued or not" (36 CFR 219.3). Net public benefits represent the sum of the net value of priced outputs plus the net value of non-priced outputs.

Financial efficiency is defined as how well the dollars invested in each alternative produce revenues to the agency. Economic efficiency is defined as how well the dollars invested in each alternative produce benefits to society. Present Net Value (PNV) is used as an indicator of financial and economic efficiency.

The table below highlights each activity included in the analysis, the unit of measure, and the economic and financial benefit of each. The economic benefit is an estimated market clearing price (what the resource would be priced at if available in the private sector) and consumer surplus (the estimated value a person has for a resource above the price actually paid). In this way, the PNV economic analysis attempts to account for the values people hold for forest resources, even though they may not have to pay for them. The financial value is a measure of the revenues actually received by the Forest Service for resource extraction, access, or use. As displayed in the following table, recreation activities tend to have low, or no revenues collected by the Forest Service while both grazing and wood products have associated fees. Although with the recreation fee program and increasing management of recreation sites by concessionaries, the revenues collected by the recreation program is likely to increase in the future. Costs associated with the PNV analysis are taken from the budget estimates for full implementation of each alternative.

• *Table B. 5. Economic Benefits and Financial Revenue Values in 2000 Dollars.*

Activity	Unit	Economic Benefit	Financial Value
Camping, picnicking, swimming	RVD	13.60	0.001
Mechanized travel and viewing	RVD	16.85	0
Hiking, horseback riding & water sports	RVD	25.44	0.002
Winter sports	RVD	101.32	0.04
Resorts, Cabins & Camps	RVD	23.38	0.34
Other recreation	RVD	77.74	0.165
General hunting	RVD	94.90	0
General fishing	RVD	126.53	0
Non consumptive wildlife	RVD	129.21	0
Grazing sheep	AUM	10.09	1.10
Grazing cattle	AUM	10.09	1.35
Sawtimber	CCF	1,631.00	80.00
Aspen	CCF	194.00	50.00
Fuelwood	CCF	24.00	0.50

Source: USDA Forest Service 1990. Caribou National Forest 2001. Quick Silver 2001.

Issue 3

Ecosystem Management

Introduction

As shown in the FEIS, this issue has been broken down into three parts: disturbances, forested vegetation diversity, and non-forested vegetation diversity. The baseline information for these sub-issues is, in part, from the 1999 Analysis of the Management Situation and Subregional Properly Functioning Condition Assessment. This information was compared to larger-scale analyses such as the Interior Columbia River Basin Ecosystem Management Project and the Intermountain Region's Properly Functioning Condition Assessment. From this collection of information, the Forest then decided upon desired future conditions for the various vegetation types on the Caribou.

Ecosystem Disturbances

INTRODUCTION

ACRES USED FOR ANALYSIS

- *Table B. 6 Estimated Acres Affected by Human-Induced Disturbance Annually Short-Term (10 Years).*

Disturbance	Alt 1	Alt 2	Alt 3	Alt 4	Alt 5	Alt 6	Alt 7	Alt 7R
Forested Vegetation								
Regeneration Harvest	1,680	1,670	2,190	710	650	490	730	1,030
Prescribed Fire	0	1,740	1,990	4,990	1,920	2,080	2,680	3,500
Non-Forested Vegetation								
Prescribed Fire	13,000	7,750	10,000	7,750	7,080	6,000	7,980	4,000
Total Acres	**14,680**	**11,160**	**14,180**	**13,450**	**9,650**	**8,570**	**11,390**	**8,530**

The acres of regeneration harvest were derived from VDDT first decade results. The acres of prescribed fire were taken from the Alternative descriptions for both for forested vegetation and non-forested vegetation.

- *Table B. 7 Estimated Acres Affected by Human-Induced Disturbance Annually Long-Term (100 Years).*

Disturbance	Alt 1	Alt 2	Alt 3	Alt 4	Alt 5	Alt 6	Alt 7	Alt 7R
Forested Vegetation								
Regeneration Harvest	770	720	850	410	390	250	290	640
Prescribed Fire	0	1,690	2,060	3,770	2,250	1,640	2,410	3,100
Non-Forested Vegetation								
Prescribed Fire	13,000	7,750	10,000	7,750	7,080	6,000	7,980	4,000
Total Acres	**13,770**	**10,160**	**12,910**	**11,930**	**9,720**	**7,890**	**10,680**	**7,740**

The acres of regeneration harvest and prescribed fire for forested vegetation were derived from VDDT tenth decade results. These vary from first decade acreages because of model assumptions and probabilities. See Issue 3, Forested Vegetation from a more detailed explanation of how the model works. Since the acres of probable treatments for non-forested vegetation were not derived from the VDDT model, they remain constant for all alternatives.

EM.1, 2 HAZARD RATINGS

EM. 1 INSECT HAZARD RATING

The Insect Hazard was derived from the amount of conifer in mature and old age classes predicted by VDDT. (See the *Forested Vegetation Diversity* section of this chapter for a complete discussion of the vegetation groupings and VDDT). The following range was applied to the Insect Hazard ratings: Low, 49 percent or less; Low-Moderate, 50-59 percent; Moderate, 60-69 percent; Moderate-High, 70-79 percent; and High when 80 percent or more of the conifer vegetation on the Forest is predicted to be in mature and old age classes. The Insect Hazard ratings were then ranked on an open-ended, relative scale with "1" being the most favorable ranking and carrying less risk to resources from insect epidemics, and higher numbers being less favorable with greater risk from insects.

% of old and mature vegetation	Hazard Rating
49% or less	Low
50-59%	Low-Moderate
60-69%	Moderate
70-79%	Moderate-High
80% or more	High

The estimated insect hazard was based on the overall conifer percentage of mature and old age-classes from VDDT for the first decade. The estimated wildfire hazard was based on the overall conifer and the overall aspen percentages of mature and old age-classes from VDDT for the first decade were averaged.

EM.2 WILDFIRE HAZARD RATING

Forested vegetation

The Wildfire Hazard for forested vegetation was derived from the amount of conifer and Quaking aspen in mature and old age classes on the Forest predicted by VDDT. (See the *Forested Vegetation Diversity* section of this chapter for a complete discussion of the vegetation groupings and VDDT.) The conifer percentage was added to the quaking aspen percentage, and a mean was calculated for percentage of forested vegetation in mature and old age classes. The Wildfire Hazard rating was applied on the following basis: Low, 49% or less; Low-Moderate, 50-59%; Moderate, 60-69%; Moderate-High, 70-79%; and High when 80% or more of the forested vegetation on the Forest is predicted to be in mature and old age classes.

Non-forest Vegetation

The Wildfire Hazard for non-forested vegetation is based on the predicted amount of sagebrush with greater than 15 percent canopy cover on the Forest. (See the *Non-forested Vegetation* section of this chapter for a complete discussion of the methods used to predict the amount of sagebrush with greater than 15 percent canopy cover on the Forest.)

The Wildfire Hazard rating was applied on the following basis: Low, 44 percent or less; Low-Moderate, 45-49 percent; Moderate, 50-54 percent; Moderate-High, 55-59 percent; and High when 60 percent or more of the non-forested vegetation on the Forest is predicted to be in the greater than 15 percent canopy cover class.

Overall Wildfire Hazard

In order to evaluate the overall hazard presented by wildfires on the Forest, the Wildfire Hazard ratings for both forested and non-forested vegetation were combined to provide an inclusive ranking for the Alternatives. The "Low" to "High" ratings were converted to a numeric rating system as follows: "Low," 1; "Low-Moderate," 2; "Moderate," 3; "Moderate-High," 4; and "High" was assigned the highest rating of 5. The numeric ratings were added and then a mean was calculated to portray the rating for each Alternative. Because the Forest contains approximately equal amounts of forested and non-forested vegetation, the combined numeric ratings are weighted nearly evenly. The combined Wildfire Hazard ratings were then ranked for each Alternative on an open-ended, relative scale with "1" being the most favorable ranking and carrying less risk to resources from uncharacteristically large wildfires, and higher numbers being less favorable with greater risk from wildfires. A lower ranking does not imply that the vegetative conditions are "good" or "desirable," only that those conditions carry a lower risk from wildfires than Alternatives ranked higher.

EM.3 FIRE CONDITION CLASS

The Condition Classes (Schmidt, *et al*, 2002) describe the vegetation composition and structural conditions as they currently exist, thereby serving as generalized wildfire hazard ratings. The risk of losing key ecosystem components due to wildland fire increases from Condition Class 1, which has the lowest risk, to Condition Class 3, which has the highest risk.

- *Table B. 8 Coarse-scale Fire Condition Class Descriptions.*

Condition Class	Description
1	Fire regimes are within or near their historic range. The risk of losing key ecosystem components is low. Vegetation attributes (species composition and structure) are intact and functioning within their historic range.
2	Fire regimes have been moderately altered from their historic range. The risk of losing key ecosystem components has increased to moderate. Vegetation attributes (species composition and structure) have been moderately altered from their historic range. Fire frequencies have departed (either increased or decreased) from historic frequencies by more than one fire return interval. This results in moderate changes to one or more of the following: fire size, intensity, severity, or landscape patterns.
3	Fire regimes have been significantly altered from their historic range. The risk of losing key ecosystem components is high. Vegetation attributes (species composition and structure) have been significantly altered from their historic range. Fire frequencies have departed (either increased or decreased) from historic frequencies by multiple fire return intervals. This results in dramatic changes to one or more of the following: fire size, frequency, intensity, severity, or landscape patterns.

The percentages of mature and old age-classes of conifer and of aspen were derived from VDDT first decade results. (See the *Forested Vegetation Diversity* section of this chapter for a complete discussion of the vegetation groupings and the VDDT model.) Changes in the amount of sagebrush with greater than 15 percent canopy cover were the same as those predicted in the *Non-forested Vegetation* section of this chapter. (See the *Non-forested Vegetation* section of this chapter for a complete discussion of the methods used to predict the amount of sagebrush with greater than 15 percent canopy cover on the Forest.)

• *Table B. 9 How Vegetation Types were classified into standard Fire Groups and Regimes.*

Forest Vegetation Type	Fire Group	Fire Regime
Limber Pine, Douglas-fir	Mesic Douglas-fir	III
Lodgepole Pine, Mixed Conifer	Lodgepole Pine	IV
Englemann Spruce/Subalpine Fir	Xeric Englemann Spruce/Subalpine Fir	III
Quaking aspen, Aspen/Conifer	Quaking aspen	IV
Sagebrush	Shrubland	II

Changes in the amount of sagebrush with greater than 15 percent canopy cover were the same as those predicted in the *Non-forested Vegetation* section. (See the *Non-forested Vegetation* section of this chapter for a complete discussion of the methods used to predict the amount of sagebrush with greater than 15% canopy cover on the Forest.) It was assumed that changes to the Sagebrush group affected the Shrubland fire group in Fire Regime II. For the Shrubland fire group the change in the amount of sagebrush with greater than 15 percent canopy cover from the Current Condition was assumed to affect the amount of vegetation in Condition Class 3 (CC3) as follows: 0 to 2 percent change produced no change in CC3; 3 to 4 percent change produced a 10 percent change in CC3; 5 to–9 percent change produced a 20 percent change in CC3; 10 to –14 percent change produced a 30 percent change in CC3 and a change of 15 percent or more produced a 40 percent in the percentage of CC3. These assumptions were made to be somewhat consistent with the Wildfire Hazard analysis for non-forested vegetation where 5 percent increments in the amount of sagebrush with greater than 15 percent canopy produced a change in the hazard rating. The first 5 percent change in Condition Class 3 was split into two classes, however, so that a small change (0-2%) did not result in change in the CC3 estimate. In general, it was assumed that fuel continuity increased as the amount of sagebrush with greater than 15 percent canopy increased, which in turn increased the CC3 percentage. The CC3 projections are intended to display differences between alternatives, and may not accurately predict actual conditions on-the-ground in the future.

For forested vegetation, the changes in the amount of old and mature age classes from the Current Condition were assumed to affect the amount of vegetation in Condition Class 3 (CC3) as follows: 0 to 4 percent change produced no change in CC3; 5 to 9 percent change produced a 10 percent change in CC3; 10 to14 percent change produced a 20 percent change in CC3; and a change of 15 percent or more produced a 30 percent in the percentage of CC3. These assumptions were made to be consistent with the Wildfire Hazard analysis for forested vegetation where 10 percent increments in the amount of mature and old vegetation produced a change in the hazard rating. The first 10 percent change in Condition Class 3 was split into two classes, however, so that a small change (0-4%) did not result in change in the CC3 estimate. In general, it was assumed that the amount and continuity of fuel (*e.g*., down woody fuel, ladder fuel) increased as the amount of vegetation in mature and old age-classes increased, which in turn increased the CC3 percentage. The CC3 projections are intended to display differences between alternatives, and may not accurately predict actual conditions on-the-ground in the future.

It was further assumed that several fire groups that contain few acres would be unaffected by changes in Condition Class 3. The largest of these types makes up only 1 percent of the upland vegetation on the Forest. These small, scattered stands may receive incidental effects of when larger, neighboring stands are disturbed, thus disturbance is generally expected to keep pace with succession. The percentage of Condition Class 3 in the Woodland, Limber Pine, and Xeric Douglas-fir fire groups in Fire Regime III, and Mesic Englemann Spruce/Subalpine Fir fire group in Fire Regime V were assumed to remain constant.

Assuming that change from human-induced or natural disturbance takes place, all percentages were subtracted from Condition Class 3 (CC3), and added to Condition Class 1 (CC1). This is assumption is intended to conserve the amount of CC1 on the Forest. When succession is simulated, it was assumed that additions to CC3 are subtracted from Condition Class 2 (CC2), and an equal amount subtracted from CC1was added to CC2, so that the CC2 percentage tends to remain unchanged. If there is more to be subtracted from CC1 than is available, the additional amount is subtracted from CC2. However, it was assumed that situation never deteriorated further than 0 percent in CC1, 10 percent in CC2, and 90 percent in CC3 in the "worst-case scenario" during the 100-year time frame for which predictions were made.

The Condition Classes were ranked for each Alternative on an relative scale with "1" being the most favorable ranking and carrying less risk from wildland fire, and higher numbers being less favorable with greater risk from wildfire. The following range was applied to the percentage of the Forest in Condition Class 3: 40 to 49 percent, 1; 50 to 59 percent, 2; 60-69 percent, 3; 70-79 percent, 4, and 80 percent or more ranked 5. A lower ranking does not imply that the vegetative conditions are "good" or "desirable," only that those conditions carry a lower risk from uncharacteristic wildland fire and the loss of key ecosystem components than Alternatives ranked higher.

- *Table B. 10 Estimated Percentage of Vegetation in Condition Class 3.*

	Alt 1	Alt 2	Alt 3	Alt 4	Alt 5	Alt 6	Alt 7	Alt 7R
Short Term % Condition Class 3	48	61	55	63	62	67	62	71
Short Term Ranking	**1**	**3**	**2**	**3**	**3**	**3**	**3**	**4**
LongTerm % Condition Class 3	45	67	55	67	73	73	67	72
Long Term Ranking	**1**	**3**	**2**	**3**	**4**	**4**	**3**	**4**

The following tables show how acres moved between fire condition classes based on succession and treatments by alternative.

Alternative 1 @ 10 Years

Fire Regimes	Condition Class 1		Condition Class 2		Condition Class 3	
	Percent	Acres	Percent	Acres	Percent	Acres
Fire Regime I	0.00	0	0.00	0	0.00	0
Fire Regime II	0.60	242,700	0.30	121,350	0.10	40,450
Fire Regime III	0.11	30,000	0.31	83,760	0.58	155,840
Fire Regime IV	0.02	6,650	0.14	48,600	0.84	297,750
Fire Regime V	0.70	2,590	0.30	1,110	0.00	0
Total	**0.27**	**281,940**	**0.25**	**254,820**	**0.48**	**494,040**

Alternative 1 @ 100 Years

Fire Regimes	Condition Class 1		Condition Class 2		Condition Class 3	
	Percent	Acres	Percent	Acres	Percent	Acres
Fire Regime I	0.00	0	0.00	0	0.00	0
Fire Regime II	0.50	202,250	0.30	121,350	0.20	80,900
Fire Regime III	0.35	94,220	0.35	93,040	0.31	82,340
Fire Regime IV	0.02	6,650	0.14	48,600	0.84	297,750
Fire Regime V	0.70	2,590	0.30	1,110	0.00	0
Total	**0.30**	**305,710**	**0.26**	**264,100**	**0.45**	**460,990**

Alternative 2 @ 10 Years

Fire Regimes	Condition Class 1		Condition Class 2		Condition Class 3	
	Percent	Acres	Percent	Acres	Percent	Acres
Fire Regime I	0.00	0	0.00	0	0.00	0
Fire Regime II	0.20	80,900	0.30	121,350	0.50	202,250
Fire Regime III	0.18	49,440	0.33	90,180	0.48	129,980
Fire Regime IV	0.02	6,650	0.14	48,600	0.84	297,750
Fire Regime V	0.70	2,590	0.30	1,110	0.00	0
Total	**0.14**	**139,580**	**0.25**	**261,240**	**0.61**	**629,980**

Alternative 2 @ 100 Years

Fire Regimes	Condition Class 1		Condition Class 2		Condition Class 3	
	Percent	Acres	Percent	Acres	Percent	Acres
Fire Regime I	0.00	0	0.00	0	0.00	0
Fire Regime II	0.00	0	0.20	80,900	0.80	323,600
Fire Regime III	0.38	101,340	0.33	90,180	0.29	78,080
Fire Regime IV	0.04	13,300	0.14	48,600	0.82	291,100
Fire Regime V	0.70	2,590	0.30	1,110	0.00	0
Total	**0.11**	**117,230**	**0.21**	**220,790**	**0.67**	**692,780**

Alternative 3 @ 10 Years

Fire Regimes	Condition Class 1		Condition Class 2		Condition Class 3	
	Percent	Acres	Percent	Acres	Percent	Acres
Fire Regime I	0.00	0	0.00	0	0.00	0
Fire Regime II	0.40	161,800	0.30	121,350	0.30	121,350
Fire Regime III	0.11	30,000	0.33	90,180	0.55	149,420
Fire Regime IV	0.02	6,650	0.14	48,600	0.84	297,750
Fire Regime V	0.70	2,590	0.30	1,110	0.00	0
Total	**0.20**	**201,040**	**0.25**	**261,240**	**0.55**	**568,520**

Alternative 3 @ 100 Years

Fire Regimes	Condition Class 1		Condition Class 2		Condition Class 3	
	Percent	Acres	Percent	Acres	Percent	Acres
Fire Regime I	0.00	0	0.00	0	0.00	0
Fire Regime II	0.20	80,900	0.30	121,350	0.50	202,250
Fire Regime III	0.38	101,340	0.33	90,180	0.29	78,080
Fire Regime IV	0.06	19,950	0.14	48,600	0.81	284,450
Fire Regime V	0.70	2,590	0.30	1,110	0.00	0
Total	**0.20**	**204,780**	**0.25**	**261,240**	**0.55**	**564,780**

Alternative 4 @ 10 Years

Fire Regimes	Condition Class 1		Condition Class 2		Condition Class 3	
	Percent	Acres	Percent	Acres	Percent	Acres
Fire Regime I	0.00	0	0.00	0	0.00	0
Fire Regime II	0.20	80,900	0.30	121,350	0.50	202,250
Fire Regime III	0.11	30,000	0.33	90,180	0.55	149,420
Fire Regime IV	0.02	6,650	0.14	48,600	0.84	297,750
Fire Regime V	0.70	2,590	0.30	1,110	0.00	0
Total	**0.12**	**120,140**	**0.25**	**261,240**	**0.63**	**649,420**

Alternative 4 @ 100 Years

Fire Regimes	Condition Class 1		Condition Class 2		Condition Class 3	
	Percent	Acres	Percent	Acres	Percent	Acres
Fire Regime I	0.00	0	0.00	0	0.00	0
Fire Regime II	0.00	0	0.20	80,900	0.80	323,600
Fire Regime III	0.40	107,760	0.33	90,180	0.27	71,660
Fire Regime IV	0.04	13,300	0.14	48,600	0.82	291,100
Fire Regime V	0.70	2,590	0.30	1,110	0.00	0
Total	**0.12**	**123,650**	**0.21**	**220,790**	**0.67**	**686,360**

Alternative 5 @ 10 Years

Fire Regimes	Condition Class 1		Condition Class 2		Condition Class 3	
	Percent	Acres	Percent	Acres	Percent	Acres
Fire Regime I	0.00	0	0.00	0	0.00	0
Fire Regime II	0.20	80,900	0.30	121,350	0.50	202,250
Fire Regime III	0.16	43,020	0.31	83,760	0.53	142,820
Fire Regime IV	0.02	6,650	0.14	48,600	0.84	297,750
Fire Regime V	0.70	2,590	0.30	1,110	0.00	0
Total	**0.13**	**133,160**	**0.25**	**254,820**	**0.62**	**642,820**

Alternative 5 @ 100 Years

Fire Regimes	Condition Class 1		Condition Class 2		Condition Class 3	
	Percent	Acres	Percent	Acres	Percent	Acres
Fire Regime I	0.00	0	0.00	0	0.00	0
Fire Regime II	0.00	0	0.10	40,450	0.90	364,050
Fire Regime III	0.33	88,500	0.33	90,180	0.34	90,920
Fire Regime IV	0.02	6,650	0.14	48,600	0.84	297,750
Fire Regime V	0.70	2,590	0.30	1,110	0.00	0
Total	**0.09**	**97,740**	**0.17**	**180,340**	**0.73**	**752,720**

Alternative 6 @ 10 Years

Fire Regimes	Condition Class 1		Condition Class 2		Condition Class 3	
	Percent	Acres	Percent	Acres	Percent	Acres
Fire Regime I	0.00	0	0.00	0	0.00	0
Fire Regime II	0.10	40,450	0.30	121,350	0.60	242,700
Fire Regime III	0.16	43,020	0.31	83,760	0.53	142,820
Fire Regime IV	0.00	0	0.14	48,600	0.86	304,400
Fire Regime V	0.70	2,590	0.30	1,110	0.00	0
Total	**0.08**	**86,060**	**0.25**	**254,820**	**0.67**	**689,920**

Alternative 6 @ 100 Years

Fire Regimes	Condition Class 1		Condition Class 2		Condition Class 3	
	Percent	Acres	Percent	Acres	Percent	Acres
Fire Regime I	0.00	0	0.00	0	0.00	0
Fire Regime II	0.00	0	0.10	40,450	0.90	364,050
Fire Regime III	0.33	88,500	0.33	90,180	0.34	90,920
Fire Regime IV	0.02	6,650	0.14	48,600	0.84	297,750
Fire Regime V	0.70	2,590	0.30	1,110	0.00	0
Total	**0.09**	**97,740**	**0.17**	**180,340**	**0.73**	**752,720**

Alternative 7 @ 10 Years

Fire Regimes	Condition Class 1		Condition Class 2		Condition Class 3	
	Percent	Acres	Percent	Acres	Percent	Acres
Fire Regime I	0.00	0	0.00	0	0.00	0
Fire Regime II	0.20	80,900	0.30	121,350	0.50	202,250
Fire Regime III	0.16	43,020	0.31	83,760	0.53	142,820
Fire Regime IV	0.02	6,650	0.14	48,600	0.84	297,750
Fire Regime V	0.70	2,590	0.30	1,110	0.00	0
Total	**0.13**	**133,160**	**0.25**	**254,820**	**0.62**	**642,820**

Alternative 7 @ 100 Years

Fire Regimes	Condition Class 1		Condition Class 2		Condition Class 3	
	Percent	Acres	Percent	Acres	Percent	Acres
Fire Regime I	0.00	0	0.00	0	0.00	0
Fire Regime II	0.00	0	0.20	80,900	0.80	323,600
Fire Regime III	0.40	107,760	0.33	90,180	0.27	71,660
Fire Regime IV	0.02	6,650	0.14	48,600	0.84	297,750
Fire Regime V	0.70	2,590	0.30	1,110	0.00	0
Total	**0.11**	**117,000**	**0.21**	**220,790**	**0.67**	**693,010**

Alternative 7R @ 10 Years

Fire Regimes	Condition Class 1		Condition Class 2		Condition Class 3	
	Percent	Acres	Percent	Acres	Percent	Acres
Fire Regime I	0.00	0	0.00	0	0.00	0
Fire Regime II	0.00	0	0.30	121,350	0.70	283,150
Fire Regime III	0.14	36,420	0.33	90,180	0.53	143,000
Fire Regime IV	0.00	0	0.14	48,600	0.86	304,400
Fire Regime V	0.70	2,590	0.30	1,110	0.00	0
Total	**0.04**	**39,010**	**0.25**	**261,240**	**0.71**	**730,550**

Alternative 7R @ 100 Years

Fire Regimes	Condition Class 1		Condition Class 2		Condition Class 3	
	Percent	Acres	Percent	Acres	Percent	Acres
Fire Regime I	0.00	0	0.00	0	0.00	0
Fire Regime II	0.00	0	0.10	40,450	0.90	364,050
Fire Regime III	0.38	101,340	0.33	90,180	0.29	78,080
Fire Regime IV	0.02	6,650	0.14	48,600	0.84	297,750
Fire Regime V	0.70	2,590	0.30	1,110	0.00	0
Total	**0.11**	**110,580**	**0.17**	**180,340**	**0.72**	**739,880**

SUMMARY

To facilitate evaluating the different wildfire rating methods a numeric weighting scheme was applied to the Wildfire Hazard ratings for forested and non-forested vegetation, the Wildfire Hazard numbers were added to the Condition Class 3 percentage, and then a mean was calculated to display the outcome. In order to give the Wildfire Hazard ratings approximately equal weight as the Condition Class percentages (or at least the same order of magnitude) the following range was applied to the Wildfire Hazard ratings: Low, 10; Low-Moderate, 20; Moderate, 30; Moderate-High, 40; and High, 50. The means were then ranked for each Alternative on an open-ended, relative scale with "1" being the most favorable ranking and carrying less risk to resources from wildfire, and higher numbers being less favorable with greater risk from wildfire. Alternatives with means ranging from 30 to 39 were assigned a ranking of 1, those from 40 to 49 a ranking of 2, and means ranging from 50 to 59 were given a 3. A lower ranking does not imply that the vegetative conditions are "good" or "desirable," only that those conditions carry a lower risk from uncharacteristic wildland fire than Alternatives ranked higher.

Issue 3

Ecosystem Management

Forested Vegetation Diversity

INTRODUCTION

National Forest Management Act (NFMA) regulations (36 CFR 219.12(f) (9)) require that each alternative indicate:

- The conditions and uses that would result from long-term application of the alternative;
- The goods and services to be produced, and the timing and flow of these resource outputs together with associated costs and benefits;
- Standards and guidelines for resource management; and
- The purpose of the proposed management direction.

The Environmental Impact Statement, including Appendix B, along with the Forest Plan for each National Forest meets the requirements as listed above for the NFMA.

Vegetation Dynamics

BASELINE INFORMATION

Modeling effects on forested vegetation were accomplished using the Vegetation Dynamics Development Tool (VDDT). VDDT is the property of its developers, ESSA Technologies, Ltd., of Vancouver, B. C.

Projecting changes in vegetation structure and composition over time is an important part of landscape-level analyses. Vegetation can change due to a variety of factors such as human activity, fires, insects, pathogens, animals, weather, growth, and competition. The interaction of these factors can be quite complex, and it can be difficult to project the combined effects over long periods of time. VDDT is a software tool that allows the construction of models for the purpose of simplifying those combined effects over time, and examining the roles of various disturbance agents and management activities in vegetation change.

The following figure displays an example of a successional pathway diagram with insect kill, uncharacteristic wildland fire, prescribed fire/escaped fire suppression, harvest and successional pathways. Successional pathway diagrams for the Forest's VDDT model can be found in the Project File under VDDT Model.

Example Successional Pathway Diagram

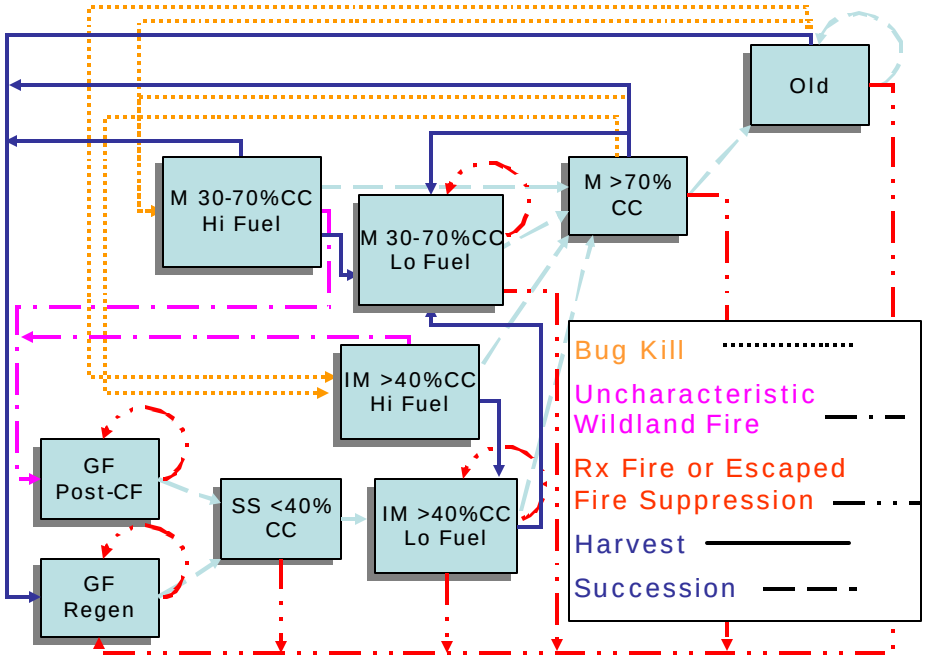

GF – grass/forb; SS – seedling/sapling; IM – immature; M – mature; CC – canopy cover

PATHWAYS AND PROBABILITIES

The primary conceptual model for vegetation dynamics is that any given unit of vegetation will change over a period of time, succeeding through some arbitrarily defined set of stages if undisturbed; if disturbed, either naturally or by management, the vegetation will instead change through a different set of stages. Each potential set of stages, in sequence, is called a pathway.

Successional pathways, with or without disturbances, summarize scenarios in vegetation dynamics. Modeling such scenarios so as to have a quick and simple, yet useful, way of observing changes over time necessarily requires that only the most basic driving forces be included. Perhaps more importantly, many of those forces exert themselves as events which are expected to occur but for which the timing and frequency are essentially random. While management activities are disturbances that may be accurately predicted, natural disturbances may only reasonably be predicted in terms of historical probabilities. The outcomes from those disturbances, then, are also necessarily probabilistic. Clearly, the interaction of the many biological and physical factors that are at work can be quite complex, and it can be difficult to project their combined effects over long periods of time; the longer the scenario, the less certain the outcome.

Scenarios can define different sets of assumptions about fire suppression, insects and disease, or forest management objectives, by assigning probabilities to the applicable successional pathways. In each scenario, changes in the dominant disturbance types and their frequency are the result of changes in the vegetation. For example, a reduction in fire frequency, representing an assumption of increased fire suppression success, may increase the number of acres in a condition that is more susceptible to insects. In that case, without changing the probability of insect-caused disturbance, more insect-caused disturbance will occur in the model because more land area is in a more susceptible condition. For more information on disturbance probabilities, see Process Paper BP32 in the Project File.

Undisturbed Succession

Changes in vegetative conditions due to dynamics such as regeneration, growth, and self-thinning, form the basic successional pathway in the absence of disturbance. Some successional pathways are cyclical, indicating the likelihood

of some self-limited lifespan, followed by self-regeneration and repetition of the cycle, unless disturbed. Other successional pathways have an end condition that represents a steady state that can be maintained perpetually.

Modeled changes due to successional dynamics are defined by the time that a vegetative unit remains in a particular stage, and by the stage into which it will move after that time has passed.

Natural Disturbances

Disturbance-related pathways specify, for each stage, the type of disturbance, its probability (which defines its return frequency) and its impact on the vegetation. The impact is represented by the different stage to which the vegetative unit has been transferred as a result of the disturbance. That new stage may be on the undisturbed pathway, representing a simple setback in succession, or it may be on another pathway entirely.

Insects and Disease

For example, a unit defined as being Douglas-fir, mature, with greater than 70 percent canopy closure, may be given an 0.1percent annual probability of experiencing an infestation of beetles. If the infestation does not occur, that unit may remain in its current stage for a defined number of years, eventually succeeding to the next stage along the undisturbed pathway. However, if the infestation does occur, the unit may be transferred to a different stage, defined as Douglas-fir, mature, 30-70 percent canopy closure, with high fuel loads. This new stage is not on the undisturbed successional pathway.

Wildland Fire

The same vegetative unit may also have some probability of incurring the effects of a wildfire. If that disturbance occurs, the unit may be transferred to a stage defined as Douglas-fir, grass-forb stage, regenerated. This new stage is on the undisturbed successional pathway, representing the starting point for the pathway.

Management Disturbances

From a modeling perspective, there is no technical difference between natural disturbances and management disturbances. They go into the models in exactly the same way. The conceptual difference is in the calculation of probabilities, and in how they are used.

Management disturbances are the controlling input factors for the models. The objectives for a particular scenario may call for a certain mix of vegetative stages by a certain time, and the management disturbances must be adjusted up or down in terms of probability so as to achieve those objectives.

For example, where initial conditions indicate most of a cover type is in older stages, the scenario objectives may require that at least half of that cover type be in an immature or younger condition within some time span. To accomplish that, a combination of management activities that result in moving the vegetation to younger stages must be implemented. A set of initial probabilities can be calculated as a starting point for the model; after running the model, if the objectives are not achieved, the probabilities can be adjusted up or down in successive runs until the desired results are achieved, or until it is reasonably proven that the desired results are not feasible.

Prescribed Fire

Intentional disturbance by setting fire to the vegetation, or by allowing naturally occurring fires to burn, are treated as "prescribed fire" in these models. The result of the fires depends on the cover type and structural stage in which they occur. The impacts in some cases are lethal, causing the vegetation to be transferred to a "regenerated" stage; or the impacts may be non-lethal, resulting in transfer to a less dense stage. In some cases, fire simply maintains the vegetation in its current stage, preventing it from moving along its undisturbed successional pathway.

Timber Harvest

Harvest disturbances include partial harvests such as thinnings, regeneration harvests, and salvage harvests. These methods are designed to achieve silvicultural objectives and to produce salable timber products. The stages to which vegetation units are transferred after a harvest disturbance are intended to represent the desired silvicultural conditions which prompted the planned activity. For example, a partial harvest on a unit in a stage defined as Douglas-fir, immature, greater than 40 percent canopy closure, may result in the transfer of that unit to a stage defined as Douglas-fir, mature, 30-40 percent canopy closure. Such a disturbance would represent the planned thinning of an overly dense unit by removing the smaller and younger trees, thereby reducing the density and increasing the average size and age of the remaining trees to achieve silvicultural objectives related to increased resistance to insects while increasing the commercial timber value of the unit.

Livestock Grazing

Grazing by permitted livestock was included in the models as a management disturbance due to the effects that grazing has on many aspects of vegetation dynamics. For example, in a vegetation unit consisting primarily of seral aspen, grazing will typically increase the rate at which the aspen converts to conifer.

DEVELOPING ANALYSIS UNITS

Analysis units are made up of forested land with distinctly different characteristics that can be estimated, modeled, combined, and then projected through time to analyze change. The ID team combined a variety of characteristics to develop analysis units that would focus on ecosystem processes and function while meeting the intent of the National Forest Management Act. The two major vegetation characteristics or components that were combined were structural stage (size class and canopy closure) and cover type. These groupings were then overlaid with rule sets or GIS coverages, such as Management Prescription Categories (MPC), to finalize the analysis units and develop the analysis unit acreages for the VDDT model. Analysis units are the acres of a structural stage/cover type combination within a MPC.

LANDSCAPES

SIZE CLASSES

The Forest was analyzed as a unit with a variety of cover types and size classes. The Forest's Geographic Information System Vegetation layer and Continuous Forest Inventory were used as the basis for determining the breakdown of size classes for modeling. This layer consists of three vegetative classes, by cover type: (1) past harvest and high intensity fire-disturbed units; these acres make up the seedling/sapling stage, (2) old growth as mapped in the 1985 Caribou National Forest Plan and (3) mature. With three exceptions: two for large fires in 1987 (9,200 acres) and 1994 (2,300 acres) and one for a blowdown event (300 acres) in 1998. Forest vegetation has not experienced a large disturbance event since the early 1900's, so most conifer. Stands in this class are considered at least 70-80 years old. Successional pathways for the VDDT model included the five size classes listed below:

- Grass Forbs
- Seedling/Sapling
- Immature Tree
- Mature Tree
- Old Tree

Acres from the three GIS Vegetation layer classes were distributed into the five VDDT model classes proportionately using percentages from the Continuous Forest Inventory, completed in 1993. For additional information, see Process Paper BP2, available in the Project File.

CANOPY CLOSURE

The density of the vegetation was categorized into four canopy closure categories. They are used to determine the potential risks from insects or wildfire, and to estimate species composition. The higher the stand density, the less light reaches the forest floor, which favors climax species and increases the risk to insects and lethal fire. Some cover types, due to the harsh sites, do not reach a high-density condition, but only progress to moderate canopy closure. Canopy Closure groups are:

- Less than <40 percent
- Greater than or equal to ≥40 percent
- 40-70 percent
- Greater than or equal to ≥70 percent

VEGETATION COVER TYPES

Vegetation composition is influenced by environmental (site) characteristics. Using cover types to classify the landscape provides a logical framework for studying succession, or vegetation changes over time. See also Process Paper BP2 in the Project File.

Cover types were used to group size class and canopy closure into ecological units that would have similar responses to disturbances and have similar pathways through the successional stages. These groupings became the basis for the VDDT model, and understanding the ecological process and function of the vegetation. The Cover Type Groups are:

- Douglas Fir
- Spruce Fir
- Mixed Conifer / Lodgepole Pine
- Stable Aspen
- Seral Aspen

Tentatively suited timberlands have been reassessed as part of Forest Plan. Reassessment of tentatively suited timberlands has been completed in accordance with the National Forest Management Act, as contained in Forest Plan regulations 36 CFR § 219.14 and Forest Service Handbook FSH 2409.13, Chapter 20. The National Forest Management Act requires that, as a minimum, lands previously identified as not suited be reassessed at least every ten years. Since current efforts to revise the Forest Plans coincided with the need to reassess timberlands not suited, a complete reassessment of suited timberlands was performed. This allowed for a comprehensive examination of the status of timberlands on the Caribou National Forest that takes into account changes since the previous assessment of timberlands. Some of these changes included changes in land ownership, increased knowledge and experience with reforestation efforts, large wildfire events, and increased knowledge and experience regarding timber management effects on soils and water quality.

Assessment of tentatively suited timberlands was accomplished using Geographic Information Systems (GIS). Use of GIS will result in consistent identification of each of the following data elements:

- Net National Forest land area administered by each Forest.
- National Forest lands that are not forested.
- National Forest lands that have been withdrawn from timber production.
- National Forest lands which are physically unsuited for timber production due to the inability to assure adequate restocking, or irreversible damage to soils or watersheds.

• *Table B. 11. Steps and Data Sources for Assessing Tentatively Suited Lands*

Steps for Assessing Tentatively Suited Lands	Data Sources
1) Determine net National Forest system land area for each National Forest.	Lands data in GIS.
2) Identify non-forested lands. These lands include: • Non-forest vegetation cover types. • Roads. • Streams. • Lakes, ponds and reservoirs >= 1 acre is size. • State and county roads on National Forest system lands.	Non-forest vegetation cover for the cover types identified here will come from satellite imagery. The remaining items identified here should be available from a several data layers in GIS.
3) Identify and subtract National Forest system lands that have been withdrawn from timber production including: • Designated wilderness areas. • Research Natural Areas. • Wild segments of wild & scenic rivers (outside of wilderness areas). • Experimental Forests. • Other withdrawn areas. * Utility right-of-way corridors. * Electronic sites. * Administrative sites (unless previously identified in Step 2 as areas withdrawn from timber production). * Developed campgrounds. The products resulting from completion of steps 1, 2 & 3 will be: • Identification of available forested lands, identification of unavailable withdrawn lands, and non-forested lands.	Each of the identified items should be available from data layers in GIS.
4). Identification of physically unsuited lands. Landslide Prone Areas	Vegetation Cover Type Maps (described above). GIS Soils Layer (See discussion below)

Soils information from the 1985 Forest Plan in Appendix B (pages B-43 through B-44 and B-48 through B50) was used as a starting point to determine capability for physically unsuited lands for the Revised Forest Plan and EIS. However, at the time the soil resource inventory for the Caribou National Forest had not yet been completed when the 1985 Forest Plan was finished. Additional information was used from the completed soil resource inventory to assess timber suitability in the first stages.

Landtypes not capable of producing timber were first assessed based on the ability to produce 20 cubic feet per acre per year of timber. Ratings published in the Soil Survey of the Caribou National Forest (USDA-FS 1990) were used to determine which landtypes were capable of producing timber. From these ratings a GIS layer was produced that displayed soils with low productivity (see Landtype Layer-Low Productivity Soils). This layer was used as the first screen to separate capable and suitable timber lands.

Landtypes not restockable were first determined by which landtypes were non-forested and which were forested. Because the mapping is at such a broad scale and the map units were not designed to separate out forested soils from non-forested soils, the vegetation database was the primary source for determining which areas were forested verse non-forested. The soil layer was used to verify the findings (see Landtype Layer-Not Restockable Soils). It is recognized that within many of the soil polygons mapped as not restockable, there are areas that actually are restockable but could not be broken out because of the scale and detail of the soil mapping. For this reason, “selected pockets of land within the

landtypes classified as no capable of sustaining intensive management activities may meet the criteria for such use; the reverse also may be true." "If such conditions exist, each proposed project within these select areas will be considered on a case-by-case basis; however, such projects must be within the constraints for capability, suitability, compatibility and feasibility established in the Plan" (1985 Forest Plan).

Landtypes that were unstable were the last stage of analysis in the timber suitability determination. All landtypes that were mapped as unstable or marginally unstable were displayed in a GIS layer (see Landtype Layer-Unstable Soils). The definitions of unstable and marginally unstable are given in the Soil Survey report (USDA-FS 1990). Only those landtypes that are stable or could be mitigated i.e. gentle slopes, etc. are included in the suitable base.

Once these layers were completed in GIS, they were overlain with the vegetation layer and all timberlands that were outside the area mapped as not capable were given tentatively suitable timberland classification.

ACRES BY CLASS BY COVER TYPE

The formulation of the VDDT model is driven by how forested vegetation changes over time with and without management actions being applied. The primary output from the modeling for effects analysis is the acres of the different forest vegetation structures by cover type. This information is critical for understanding habitat conditions for wildlife, insect and wildfire hazards, species composition, integrating ecological processes and predicting short- and long-term effects. A sample from Alternative 7R is displayed in Table B-7.

- *Table B. 12. Conifer Acres and Percent Mature and Old by Decade Alternative 7R.*

Decade	Acres Mature and Old (M acres)	Percent Mature and Old	Decade	Acres Mature and Old (M acres)	Percent Mature and Old
1	255	80	6	213	64
2	242	75	7	223	66
3	230	71	8	228	67
4	187	67	9	233	68
5	211	64	10	234	68

EFFECTS ANALYSIS

DEVELOPMENT OF ALTERNATIVE MODELS

The Forest developed eight alternatives, each including a different disturbance scenario for modeling. (See Chapter 2, Alternative Descriptions.) VDDT models were constructed for the Forest for each alternative to address three main questions. First, what set of management activities, if any, must be placed on the landscape to achieve the objectives of a particular alternative? Objectives were generally defined as a mix of structural stages within each vegetation cover type at a particular time. Second, where natural succession and natural disturbances, rather than management activities, determine the future conditions of the forest, what will the forest look like and how will it function in the near and distant future? Third, what level of timber harvest, if any, is sustainable for this alternative?

The VDDT model projects a wide variety of outcomes from the different alternatives and other model formulations such as baseline and sensitivity runs. These outcomes can be used to gain an understanding and to discuss effects of the alternatives related to a wide range of resource areas and social/economic considerations.

Sensitivity analysis is a process in which one or more model parameters are altered such that successive runs provide insight into the influence of those parameters on the outcomes being modeled. For example, the affects of a budget constraint on DFC attainment can be measured by removing the constraint completely, or by incrementally increasing or decreasing budget level and rerunning the model. In order to better understand model behavior and to explore the

management policies or goals they represent, several types of sensitivity analysis were conducted: sensitivity analysis of goal weights; constraints applied to alternatives; and the effects of uncharacteristic wildfire on alternatives. Also, when consistent with the intent of an alternative or for purposes of conducting sensitivity analysis, model solutions were also explored that maximized sustainable harvest levels or minimized the amount of acres in high fire hazard condition.

One sensitivity analysis was conducted using the disturbance probabilities for wildfires that escape suppression. Instead of using a single consistent annual probability for all successional stages, the probabilities were randomly increased as forested vegetation advanced through each stage. This was done to model increasing fuel loading along a cover type's successional pathway to see how acres escaping wildfire suppression would respond to this increasing hazard. The model responded with a spike (large increase) of suppression-escaped wildfire acres at a point where acres had congregated in the mature and old age class. Although it seems intuitive, this approach was not developed in the analysis due to a lack of research and experience basis for increasing the probabilities of wildfire escaping suppression as forested vegetation advances through successional stages. Other analyses were run harvesting more volume earlier in the 100-year timeframe in the mature and old stages of conifer types to determine the effects. This resulted in a conifer harvest curve which started high and dropped rapidly through the decades. None of these simulations met the non-declining even flow constraint.

Using VDDT software, models covering ten to twenty decades were formulated for each alternative, with analysis units that represented approximately forty-two vegetative conditions, described by landscape location, vegetation cover types, and structural stages, moving through time along disturbed or undisturbed successional pathways. The undisturbed pathways followed basic successional processes and were the default unless either a natural disturbance event occurred or a management activity was imposed. Natural disturbances included wildland fire with failed suppression, catastrophic insect and disease events, and catastrophic large-scale fire. Management activities such as livestock grazing, prescribed fire, and timber harvest pushed the analysis units off the undisturbed pathways and onto disturbed pathways that reflected the outcome from such treatment. Desired future conditions (DFC) for each alternative were represented as goals for the number of acres to be maintained in specific structural stages, by cover type or groups of cover types.

Disturbances, both natural and managed, were introduced into the modeling process via probabilities. Development of initial conditions including the assignment of acres by class is discussed in "Developing Analysis Units" above. Disturbance probabilities were varied for each alternative, particularly for prescribed fire and harvest disturbances, in order to capture the intent of the alternative and to meet the non-declining yield constraint. Some disturbance probabilities were non-linear, allowing, for example, the probability of a catastrophic insect infestation to increase as the proportion of a particular cover type that is prone to infestation (such as old Spruce-Fir) increases. This allowed some recognition of the dynamics of contagion in both fire and insects; however, none of the analysis units were spatially specified beyond the landscape unit in which they occurred, so the spatial component of contagion was ignored.

All Alternatives

To model occurrences of wildfires, which escape suppression, the same annual probability (.002) was used in all stages for all species and alternatives. This was based primarily on past wildfire history and acres burned. Prescribed fire probabilities and acres disturbed vary by alternative based on alternative theme. Given the high percentage of forested vegetation acres in the mature and old age classes, most fire disturbance was considered high intensity which moved acres burned back to early successional stages. Timber harvest prescriptions and probabilities and insect probabilities in each cover type are similar by alternative on suited acres, but acres vary widely by alternative.

MANAGEMENT PRESCRIPTION CATEGORIES (MPCS)

The array of MPC assignments to the alternatives was modeled in VDDT. Alternatives vary primarily by the different MPCs that are applied to analysis units. See Chapter 3 in the EIS, and Chapter 4, Part 2 in the Forest Plan for a complete description of MPCs.

MPCs that preclude mechanical treatments or where management direction focuses on restoration without providing for a sustainable level of outputs were labeled as "unsuited," meaning that the lands to which those MPCs were applied,

in that Alternative, would not be considered "suited" for timber management, and any timber volume removed from them would not accrue to the Allowable Sale Quantity (ASQ). MPCs that have mechanical treatments and provide for a sustainable level of outputs were labeled as suited. Mechanical treatments within unsuited MPCs will accrue volume (based on outcome of meeting Desired Future Conditions) toward the Total Sale Program Quantity (TSPQ). Mechanical treatments within suited MPCs will accrue volume (based on outcome of meeting DFCs) towards the Allowable Sale Quantity. See Project File (VolumeYieldFLMP.xls) for details on volume by stand condition and MPC for each alternative.

DESIRED FUTURE CONDITIONS

The Desired Future Conditions for each alternative are described in the alternative descriptions in Chapter 2. Alternatives differ in how well they meet the Desired Future Conditions for forested vegetation. Modeling vegetation change over time was accomplished using the VDDT model, which allows for a comparison between alternatives relative to attainment of Desired Future Conditions.

Desired Future Conditions were input into the analysis process as goals to achieve in the VDDT model. Generally, Desired Future Conditions were assigned in terms of a certain distribution of acres by structure class and species composition, focusing on the mature and old age classes. Each alternative had a unique set of goals to represent DFC. These DFCs generally called for a fairly even distribution of size classes on forested suited lands and late successional conditions on forested unsuited lands.

A balance of size classes is estimated to reflect a structure that would sustain the cover type in the long term. For the conifer types, the selected range of classes includes:

Grass/forb	10 percent
Seedling/sapling	10 percent
Young forest	20 percent
Mid-aged forest	20 percent
Mature forest	20 percent
Old forest	20 percent

These percentages are estimates or approximations based on work done by the Northern Goshawk Scientific Committee from 1990 to 1992 (Reynolds, *et al*, 1992).

The VDDT model used management actions as discussed earlier to change the forested vegetation to attempt to achieve the Desired Future Conditions for each alternative based on the MPCs assigned to reflect the intent and theme of the alternatives. The management actions contain different sets of activities that are applied to the analysis units. The management actions are summarized by alternative, while the activities are summarized by cover types and by the MPCs. These activities have different costs, occur at different timing sequences, produce different effects on the landscape, and have different amounts of ASQ and TSPQ.

Issue 3

Ecosystem Management

Non-forested Vegetation Diversity

INTRODUCTION

Projecting changes in vegetation structure and composition over time is an important part of the planning process. Vegetation changes for a variety of reasons such as human activity, fire, insects, pathogens, weather, or growth and competition. The interaction of these factors is complex and the combined effects are difficult to predict over long periods of time. The following table is a summary of the proposed treatments in the non-forested vegetation in each alternative and the outcomes from the calculations found below.

• *Table B. 13 Outcomes by Alternative for Non-Forested Vegetation.*

	Alt 1	Alt 2	Alt 3	Alt 4	Alt 5	Alt 6	Alt 7	Alt 7R
Acres* Treated/Year	13,000	7,750	10,000	7,750	7,080	6,000	7,975	4,000
Acres Treated/Decade	130,000	77,500	100,000	77,500	70,800	60,000	79,750	40,000**
ac >15 cc After 10 years	35.4	48.3	42.8	48.3	50.0	52.7	47.8	56.8
Estimated Years to achieve DRFC	<10 ~8 yrs	60	14	60	Static	Achieves DRFC Currently	45	Moves Away from DRFC

* Treatment acres are based on the theme of the Alternative.
** Does not include the acres burned by wildfire.
Alt 1= Existing condition (13,000 acres treated/yr. for wildlife habitat improvement).

DESIRED RANGE OF FUTURE CONDITIONS (DRFC)

The goal for Alternatives 2, 3, 4, 5, 7, and 7R is to achieve/maintain 40 percent of the sagebrush/mountain shrub acres in 15 percent canopy cover density or greater. Achieve/maintain fifty to seventy percent of the sagebrush/mountain shrub acres in less than fifteen percent canopy cover density. Sagebrush is dominant on all but zero to five percent of the historical habitat. Mountain shrub types have a balanced range of shrubs/herbaceous understory components in various age classes. Disturbance regimes and patterns are within historical ranges.

No goals were identified for **Alternative 1**.

The goal of **Alternative 6** is to maintain greater than 50 percent of the sagebrush/mountain shrub acres in greater than 15 percent canopy cover density class.

PFC Goal for Alternatives 2, 3, 4, 5 and 7 and 7R is to maintain 40 percent of the sagebrush/mountain shrub acres in 15 percent canopy cover or greater. **Alternative 1 and 6** have no PFC goals. The goal of **Alternative 6** is to maintain greater than 50 percent of the sagebrush/mountain shrub acres in greater than 15 percent canopy cover.

ASSUMPTIONS

Following assumptions were made to complete the analysis.

- **Assumes** that **50 percent** of all sagebrush/mountain shrub acres (404,539 acres) is in the greater than 15 percent canopy cover density class. Approximately 202,269 acres are estimated to be in greater than 15 percent canopy cover, and that all treatment will be in this class to move the canopy cover back to 0-5 percent canopy cover density class.

- **Assumes** that **15 percent** of the sagebrush acres in the 0-15 percent canopy cover density class will never achieve greater than 15 percent canopy cover density (60,681 acres) because of edaphic or biological reasons.

- **Assumes** that **5 percent** of the remaining sagebrush/mountain shrub acres in less than 15 percent canopy cover is succeeding into the greater than 15 percent canopy cover annually. Approximately 7,080 acres of the 141,588 acres move into the greater than >15 percent canopy cover density class on an annual basis.

- **Assumes** all prescribed fire treatments move acres from the greater than 15 percent canopy cover density class to 0-5 percent canopy cover density class. Primarily, treatments will occur in the greater than 25 percent canopy cover density class.

- **Assumes** treatment acres include acres burned by wildfire, except Alternative 7R, where wildfire acres are analyzed in addition to the acres proposed for treatment. and acres burned by prescribed fire.

It should be noted that when analyzing just two vegetation classes in sagebrush/mountain shrub, after twenty years of treatments, the amount being treated in the greater than> 15 percent canopy cover density class to move the class back to the 0-5 percent canopy cover density class is equal to the amount of acres growing back into the greater than >15 percent canopy cover density class. Therefore, estimated acres treated to achieve the Desired Range of Future Conditions (DRFC) must be adjusted after twenty years in some alternatives.

SCALE AND SCOPE OF ANALYSIS

SAGEBRUSH/MOUNTAIN SHRUB VEGETATION GROUP

The sagebrush/mountain shrub vegetation group was analyzed forest-wide and includes approximately 404,500 of the 461,100 acres identified as non-forested acres in the Forest vegetation classification update in the year 2000. The remaining 56,600 acres are occupied by maple, mountain mahogany, and juniper. Because of their limited extent across the Forest, no objectives have been set for these woodland/shrubland vegetation types, but they will be evaluated at a site-specific level. The sagebrush/mountain shrub vegetation was analyzed by calculating the amount of acres left in the greater than 15 percent canopy cover density class after ten years and long-term (50-100 years), factoring in succession and disturbances. Based on experience from past treatments on the Forest and information from fire effects studies discussed in Chapter 3, the amount of time generally required for a treated site (0-5 percent canopy cover density) to re-establish canopy cover densities greater than fifteen percent is twenty to thirty years (Heyrend, 2001; Bunting, *et al*, 1987; Frass *et al*, 1992; Harniss, *et al*, 1973; Bushey, 1986; Walhof, 1997; Curlew EIS, 2002; and Beaver Creek EA, 1998)). Studies have also shown that when sagebrush canopy cover density reaches between twelve and twenty percent in some sagebrush plant communities, the herbaceous production is restricted. As the canopy cover density increases, the communities become closed to new herbaceous seedling recruitment (Winward, 1991; Sturges, 1975). Based on this information, the canopy cover densities were divided into two classes: less than 15 percent canopy cover density and greater than 15 percent canopy cover density.

Baseline indicator for existing acres in the greater than 15 percent canopy cover density class old/mature age condition is estimated at approximately 50 percent of the sagebrush/mountain shrub acres, or about 202,269 acres. in the greater than 15 percent canopy cover class

Succession

To analyze canopy cover density condition classesage condition classes for the sagebrush/mountain shrub vegetation group, succession was factored in when calculating canopy cover density classes over a ten-year period. Re-establishment of sagebrush is often somewhat variable, because many factors may influence succession, such as size of treatment area, proximity to seed source, climate, and soils. Based on experience from past treatments that have occurred on the Forest and information from fire effects studies discussed in Chapter 3, the amount of time generally required for a treated site in this (0-5 percent canopy cover density) to re-establish canopy cover densities greater than 15 percent is twenty to thirty years (Winward, 1991; Sturges, 1975). When considering succession over time, it is estimated that all of the existing acres in the 0-15 percent canopy cover density class that are capable of establishing canopy cover densities of greater the 15 percent will move into the greater than 15 percent canopy cover density class in the next twenty years if these acres are left untreated. This means that an average of 5 percent (5 x 20 years = 100) of the acres in the 0-15 percent canopy cover density class are expected to move into the greater than 15 percent canopy cover density class annually because of succession. Wildfires, wildland fire use, were considered as part of the acres treated in each alternative, except for Alternative 7R. In Alternative 7R an additional 3,000 acres were added from the average wildfire information for the decade. A spreadsheet that factors in treatments with succession rates was used to calculate outcomes in each alternative.

TALL FORB COVER TYPE

Because the tall forb cover type was not separated out in the Forest vegetation classification, the actual extent of this type has not been determined. This cover type was analyzed qualitatively forest-wide using inferences derived from range ocular and site analysis collected in the 1960's, where ground cover and species composition were identified for this cover type. Summarized data was used from "A Hierarchical Stratification of Ecosystems on the Caribou National Forest" (USDA, 1997).

WOODLAND COVER TYPES

Short-term and long-term goals for woodland cover types, such as juniper, maple and mountain mahogany, have not been established. Analysis of these cover types will be conducted at the site-specific level to determine treatment levels. No further analysis was completed.

Because the tall forb cover type was not separated out in the Forest vegetation classification, the actual extent of this type has not been determined. This cover type was analyzed qualitatively forest-wide using inferences derived from range ocular and site analysis collected in the 1960's, where ground cover and species composition were identified for this cover type. Summarized data was used from "A Hierarchical Stratification of Ecosystems on the Caribou National Forest" (USDA, 1997).

WOODLAND COVER TYPES

Short-term and long-term goals for woodland cover types, such as juniper, maple and mountain mahogany, have not been established. Analysis of these cover types will be conducted at the site-specific level to determine treatment levels. No further analysis was completed.

EFFECTS ANALYSIS

The following calculations were made to determine short-term outcomes for the sagebrush/mountain shrub vegetation group in each alternative. All acres treated would be from the greater than 15 percent canopy cover (cc) density class.

ALTERNATIVE 1

Treatments

13,000 acres in the greater than 15 percent cc treated per year, times ten years, equals 130,000 acres treated in the decade.

Succession

7,080 acres move into greater than 15 percent cc per year, times ten years, equals 70,800 acres moving into greater than 15 percent cc in the decade due to succession.

Result

130,000 acres treated per decade minus 70,800 acres moving back into greater than 15 percent cc equals 59,200 acres net reduction of greater than 15 percent cc at the end of ten years.

Percent cc after 10 years

202,269 acres in greater than 15 percent cc @ year 1 minus 59,200 acres reduction in the acres in greater than 15 percent cc equals =143,069 acres left in greater than 15 percent cc. Then, 143,069 acres remaining in the greater than 15 percent cc divided by 404,539 acres of total sagebrush/mountain shrub equals 35.37 percent of the acres in greater than 15 percent cc after ten years.

Decades to achieve Long-term Goal

The following calculations were made to determine the effect on sagebrush/mountain shrub canopy cover density with this level of treatments.

35.37 percent of the acres are in greater than 15 percent cc after ten years minus 50 percent Existing Condition equals 14.63 percent reduction in the greater than 15 percent cc class after the first decade. 10 percent reduction in greater than 15 percent cc (50 percent current condition minus 40 percent as midpoint for historical range of variability (HRV) equals 10 percent for desired goal) divided by 14.63 percent reduction of acres in greater than 15 percent cc per decade equals 6.8 years or 0.7 decades to achieve 40 percent of the sagebrush/mountain shrub acres in greater than 15 percent cc/HRV.

ALTERNATIVE 2

Treatments

7,750 acres treated times ten years equals 77,750 acres treated over the decade

Succession

7,080 acres move into greater than 15 percent cc each year times ten years = 70,800 acres moving into greater than 15 percent cc due to succession.

Result

77,750 acres treated per decade minus 70,800 acres moving back into greater than 15 percent cc due to succession equals 6,950 acres net reduction of greater than 15 percent cc at the end of ten10 years.

Percent cc after 10 years

202,269 acres in greater than 15 percent cc @ year 1 minus 6,950 acres reduction in greater than 15 percent cc equals =195,319 acres left in the greater than 15 percent cc at the end of the first decade.

195,319 ac in greater than 15 percent cc divided by 404,539 acres of total sagebrush/mountain shrub equals 48.3 percent of the acres left in the greater than 15 percent cc after ten10 years.

Decades to achieve Long-term Goal

48.3 percent of the acres remaining in the greater than 15 percent cc after ten10 yearsrs. minus 50 percent Existing Condition equals 1.72 percent reduction in the number of acres in the greater than 15 percent cc after the first decade. 10 percent reduction in the greater than 15 percent cc (50 percent Existing condition minus 40 percent midpoint for HRV) equals10 percent for desired goal) divided by 1.72 percent reduction per decade equals 58 years or about ~6.0 decades to achieve 40 percent of the sagebrush/mountain shrub acres in the greater than 15 percent cc/HRV.

ALTERNATIVE 3

Treatments

10,000 acres treated times ten years equals 100,000 acres treated over the decade

Succession

7,080 acres move into the greater than 15 percent cc each year times ten years equals 70,800 acres moving into greater than 15 percent cc due to succession.

Result

100,000 acres treated per decade minus 70,800 acres moving back into greater than 15 percent cc due to succession per decade equals 29,200 acres net reduction of acres in the greater than 15 percent cc at the end of ten years.

Percent cc after 10 years

202,269 acres in greater than 15 percent cc @ year 1 minus 29,200 acres reduction in acres in greater than 15 percent cc due to succession equals 173,069 acres left in greater than 15 percent cc at the end of the first decade.

173,069 acres remaining in the greater than 15 percent cc divided by 404,539 acres of total sagebrush/mountain shrub equals 42.8 percent of the acres left in greater than 15 percent cc after ten years.

Decades to achieve DFC

42.8 percent of the acres remaining in greater than 15 percent cc after ten years minus (50 percent Existing Condition equals 7.2 percent reduction in acres in the greater than 15 percent cc after the first decade. 10 percent reduction in the acres in greater than 15 percent cc (50 percent Existing condition minus 40 percent midpoint for HRV) equals 10 percent for desired goal) divided by 7.2 percent reduction per ten years equals = 13.8 years or about ~1.4 decades to achieve 40 percent of the sagebrush/mountain shrub acres in greater than 15 percent cc/HRV.

ALTERNATIVE 4

Treatments

7,750 acres treated times ten years equals 77,750 acres treated per decade

Succession

7,080 acres move into greater than 15 percent cc each /year times ten years equals 70,800 acres moving into greater than 15 percent cc due to succession.

Result

77,750 acres treated per decade minus 70,800 acres moving back into greater than 15 percent cc due to succession equals 6,950 acres net reduction of greater than 15 percent cc at the end of ten years.

Percent cc after 10 years

202,269 acres in greater than 15 percent cc @ year 1 minus 6,950-acre reduction in acres in greater than 15 percent cc acres equals 195,319 acres left in greater than 15 percent cc at the end of the first decade.

195,319 acres remaining in greater than 15 percent cc divided by 404,539 acres total sagebrush/mountain shrub equals 48.3 percent of the acres are left in greater than 15 percent cc after ten years.

Decades to achieve DFC

48.3 percent of the acres remaining in greater than 15 percent cc after ten years minus 50 percent Existing Condition equals 1.72 percent reduction in the number of acres in greater than 15 percent cc after the first decade. 10 percent (50 percent Existing condition minus 40 percent midpoint for HRV) equals 10 percent for desired goal) divided by 1.72 percent reduction per ten years equals 58 years or about ~6.0 decades to achieve 40 percent of the sagebrush/mountain shrub in greater than 15 percent cc/HRV.

ALTERNATIVE 5

Treatments

7,080 acres treated times ten years equals 70,800 acres treated per decade

Succession

7,080 acres move into greater than 15 percent cc each year times ten years equals 70,800 acres moving into the greater than 15 percent cc due to succession.

Result

70,800 acres treated per decade minus 70,800 acres moving back into the greater than 15 percent cc due to succession equals 0 acres net reduction of greater than 15 percent cc at the end of ten years.

Percent cc after 10 years

202,269 acres in greater than 15 percent cc @ year 1 minus 0 acres reduction in acres in the greater than 15 percent cc equals 202,269 acres left in greater than 15 percent cc at the end of the first decade.

202,269 acres remaining in the greater than 15 percent cc at the end of first decade divided by 404,539 acres of total sagebrush/mountain shrub equals 50 percent of the acres in greater than 15 percent cc after ten years.

Decades to achieve Long-term Goal

50 percent of the acres remaining in greater than 15 percent cc after ten yearrs.minus 50 percent Existing condition equals 0 percent reduction in acres in greater than 15 percent cc after ten years. 10 percent (50 percent existing condition minus 40 percent midpoint for HRV) equals 10 for desired goal percent) divided by 0 percent reduction per

ten years equals more than 100 years or more than ten decades to achieve 40 percent of the sagebrush/mountain brush in greater than 15 percent cc/HRV.

ALTERNATIVE 6

Treatments

6,000 acres treated times ten years equals 60,000 acres treated over the decade.

Succession

7,080 acres move into greater than 15 percent cc each /year times ten years equals 70,800 acres moving into greater than 15 percent cc due to succession.

Result

60,000 acres treated per decade minus 70,800 acres moving back into greater than 15 percent cc due to succession equals 10,800 acres net increase of acres in the greater than 15 percent cc at the end of ten years.

Percent cc after 10 years

202,269 acres in greater than 15 percent cc @ year 1 plus 10,800 acres increase in the greater than 15 percent cc equals 213,069 acres left in greater than 15 percent cc at the end of the first decade.

213,069 acres remaining in the greater than 15 percent cc divided by 404,539 acres of total sagebrush/mountain shrub total sagebrush/mountain shrub equals 52.7 percent of the acres left in greater than 15 percent cc after ten years.

Decades to achieve Long-term Goal

52.7 percent of the acres remaining in greater than 15 percent cc after ten years minus 50 percent existing condition equals a 2.7 percent increase in the number of acres in the greater than 15 percent cc after the first ten years. 2.7 percent increase per decade times ten decades equals 77 percent of the sagebrush/mountain shrub acres are in greater than 15 percent cc after 100 years. This alternative achieves the long-term goal within the first decade.

ALTERNATIVE 7

Treatments

7,975 acres treated times ten years equals 79,750 acres treated in the decade.

Succession

7,080 acres move into the greater than 15 percent cc each year times ten years equals 70,800 acres moving into the greater than 15 percent cc due to succession.

Result

79,750 acres treated per decade minus 70,800 acres moving back into greater than 15 percent cc due to succession equals 8,950 acres net reduction in acres in the greater than 15 percent cc at the end of ten years.

Percent cc after 10 years

202,269 acres in greater than 15 percent cc @ year 1 minus 8,950 acres decrease in greater than 15 percent cc equals 193,319 acres remaining in the greater than 15 percent cc at the end of the first decade.

193,319 acres remaining in the greater than 15 percent cc divided by 404,539 acres of total sagebrush/mountain shrub equals 47.8 percent of the acres remaining in greater than 15 percent cc after ten years.

Decades to achieve Long-term Goal

47.8 percent of the acres remaining in greater than 15 percent cc after ten years minus 50 percent existing condition equals a 2.21 percent reduction in the number of acres in greater than 15 percent cc per decade. 10 percent reduction in acres in the greater than 15 percent cc (50 percent Existing condition minus 40 percent midpoint for HRV) equals 10 percent for desired goal) divided by 2.21 percent reduction per decade equals 45 years or 4.5 decades to achieve 40 percent of sagebrush/mountain shrub acres in greater than 15 percent cc/HRV.

ALTERNATIVE 7R

Treatments

4,000 acres treated times ten years equals 40,000 acres treated in the decade of greater than 15 percent cc. In addition 3,000 acres were added for wildfire, which results in 43,000 acres treated over the decade.

Succession

7,080 acres in the greater than< 15 percent cc class move into the greater than 15 percent cc each year times ten years equals 70,800 acres moving into greater than 15 percent cc from succession.

Result

430,000 acres treated per decade minus 70,800 acres moving back into greater than 15 percent cc due to succession equals 30,800 27,800 acres net increase in the greater than 15 percent cc at the end of the first decade.

Percent cc after 10 years

202,269 acres (see assumptions above) existing in greater than 15 percent cc plus 27,800 acres net increase in the greater than 15 percent cc equals 230,069 acres left in greater than 15 percent cc after the first decade.

2303,069 acres remaining in the greater than 15 percent cc divided by 404,539 acres total sagebrush/mountain shrub equals 56.8 percent of the acres in greater than 15 percent cc after the first decade.

Decades to achieve DFC

56.8 percent of acres remaining in greater than15 percent cc resulting after ten years minus 50 percent in greater than 15 percent cc (Existing condition) equals a 7.6 percent increase in the number of acres in greater than 15 percent cc after the first decade.

Desired goal in this alternative is to haveis30 - 50 percent of the sagebrush/mountain shrub acres in greater than 15 percent cc.

Approximately 0.68 percent increase per year is being added to the greater than 15 percent cc in this alternative so in approximately ten years 6.8 percent is added to the greater than 15 percent cc class.

After 100 years the outcome is expected to be 79 percent of the acres in greater than15 percent cc. This alternative will not achieve the long-term goal without additional treatments being added in the future decades.

LONG TERM ANALYSIS

After approximately twenty years of treating sagebrush/mountain shrub vegetation, the amount of acres moving into the greater than 15 percent canopy cover density is nearly equal to the amount of acres being treated annually and taken out the number of acres in the greater than 15 percent canopy cover density class, because of the twenty year rotation cycle. Therefore, in the long term, if treatments remain the same, the amount of acres in the greater than 15 percent canopy cover density tends to increase over time due to succession in most alternatives. The following calculations were made to determine long-term outcomes.

ALTERNATIVE 1

This alternative treats approximately 130,000 acres in the greater than 15 percent canopy cover density class per decade. After two decades, the acres treated are equal to acres moving into greater than 15 percent canopy cover density class. Approximately 260,000 acres will have been treated after two decades. Assuming all 260,000 acres are treated, divide by 404,500 total sagebrush/mountain shrub acres and approximately about 64 percent of the acres will be in the less than 15 percent canopy cover density class. This leaves about 36 percent of the acres in the greater than 15 percent canopy cover density class.

ALTERNATIVE 2

This alternative treats approximately 77,500 acres in the greater than 15 percent canopy cover density class per decade. After two decades, the acres treated are equal to acres moving into greater than 15 percent canopy cover density class. Approximately 155,000 acres will have been treated after two decades. Assuming all 155,000 acres are treated, divide by 404,500 total sagebrush/mountain shrub acres and approximately 38 percent of the acres will be in less than 15 percent canopy cover. This leaves about 62 percent of the acres in the greater than 15 percent canopy cover density class over the long term

ALTERNATIVE 3

This alternative treats approximately 100,000 acres in the greater than 15 percent canopy cover density class per decade. After two decades, the acres treated are equal to acres moving into greater than 15 percent canopy cover density class. Approximately 200,000 acres will have been treated after two decades. Assuming all 200,000 acres are treated, divide by 404,500 total sagebrush/mountain shrub acres and approximately 49 percent of the acres will be in less than 15 percent canopy cover density. This leaves about 51 percent of the acres in the greater than 15 percent canopy cover density class over the long term.

ALTERNATIVE 4

See Alternative 2.

ALTERNATIVE 5

Alternative 5 treats approximately 70,800 acres in the greater than 15 percent canopy cover density class per decade. After two decades, the acres treated are equal to acres moving into greater than 15 percent canopy cover density class. Approximately 141,600 acres will have been treated after two decades. Assuming all 141,600 acres are treated, divide by 404,500 total sagebrush/mountain shrub acres and approximately 35 percent of the acres will be in less than 15 percent canopy cover density. This leaves about 65 percent of the acres in the greater than 15 percent canopy cover density class over the long term

ALTERNATIVE 6

This alternative treats approximately 60,000 acres in the greater than 15 percent canopy cover density class per decade. After two decades, the acres treated are equal to acres moving into greater than 15 percent canopy cover density class. Approximately 120,000 acres will have been treated after two decades. Assuming all 120,000 acres are treated, divide

by 404,500 total sagebrush/mountain shrub acres and approximately 30 percent of the acres will be in less than 15 percent canopy cover density. This leaves about 70 percent of the acres in the greater than 15 percent canopy cover density class over the long term.

ALTERNATIVE 7

This alternative treats approximately 79,750 acres in the greater than 15 percent canopy cover density class per decade. After two decades, the acres treated are equal to acres moving into greater than 15 percent canopy cover density class. Approximately 159,500 acres will have been treated after two decades. Assuming all 159,500 acres are treated, divided by 404,500 total sagebrush/mountain shrub acres and about 39 percent of the acres will be in less than 15 percent canopy cover density. This leaves about 61 percent of the acres in the greater than 15 percent canopy cover density class over the long term.

ALTERNATIVE 7R

Alternative 7R treats approximately 40,000 acres in the greater than 15 percent canopy cover density class per decade. An additional 3,000 acres are added for wildfire. After two decades, the acres treated are equal to acres moving into the greater than 15 percent canopy cover density class. After two decades, 86,000 acres will have been treated. Assuming all 86,000 acres are treated, divided by 404,500 total sagebrush/mountain shrub acres is about 21 percent in less than 15 percent canopy cover density. This leaves about 79 percent of the acres in the greater than 15 percent canopy cover class over the long term.

The following table displays the outcomes by alternative from the above calculations.

Alt	Existing % of Acres in >15% canopy cover class	Desired Range of Future Conditions (%Acres in > 15 cc)	1st Decade Outcome (% Acres in > 15 cc)	Long-term Goal (% Acres in > 15 cc)	Estimated Time to Attain DFC (Decades)	Long-term Outcome (% Acres with > 15 CC)
1	50	None Established	35	None Established	~0.7	36
2	50	30-50	48	40	6.0	62
3	50	30-50	43	40	1.4	51
4	50	30-50	48	40	6.0	62
5	50	30-50	50	540	>10.0	65
6	50	>50	53	>50	N/A	70
7	50	30-50	48	40	4.5	61
7R	50	30-50	58	50	>10.0	79

Issue 4

Livestock Grazing

NFMA Capability and Suitability

INTRODUCTION

As a result of public comments on the Caribou National Forest Draft Environmental Impact Statement and Draft Revised Forest Plan, capability and suitability of lands for livestock grazing were re-evaluated between the Draft and Final EIS. The IDT met and came up with a process for determining suitability based on the R4 Protocol, other Forest's processes, and the NFMA regulations. Some things to remember:

- Range capability is generally determined based on physical characteristics while suitability includes value judgments about the appropriateness of grazing and other uses foregone.
- "Rangeland suitability is…the integration of capability and the appropriateness of grazing livestock on a particular area of land considering such things as economics, social concerns, and grazing compatibility with other land uses." (R4 Protocol)
- Not capable or unsuitable does not mean closed to grazing, it means those acres are not counted when determining grazing capacity of an allotment.

The IDT confirmed the capability analysis for both cattle and sheep but made some changes in the suitability analysis. These are detailed below.

CRITERIA AND PROCESS FOR DETERMINING RANGELAND CAPABILITY

The 1982 planning regulations (36 CFR 219.20, prior to the 2001 published version of the 36 CFRs) require the mapping of capable lands for grazing, even though rangeland capability is no longer used to set livestock permit numbers. Permits have an established number and season of use that has been determined over time, and any adjustments are based on short- or long-term monitoring.

Capability is defined in the Intermountain Region's Protocol as:

> *"The potential of an area of land to produce resources, supply goods and services, and allow resource uses under an assumed set of management practices and at a given level of management intensity. Capability depends on current conditions and site conditions, such as climate, slope, landform, soils and geology, as well as the application of management practices, such as silviculture or protection from fire, insects, and disease."*

Rangeland capability represents the biophysical determination of those areas that can sustain grazing but it is not a decision to graze livestock nor a capacity determination. Determining capability requires the assessment of those biophysical characteristics conducive to livestock grazing. **Capable acres do not vary by alternatives.**

The physical characteristics suggested in the Intermountain Region's protocol for consideration in determining capability include:

- Areas with less than 30 percent slopes for cattle and less than 45 percent slopes for sheep;

- Areas producing more than or having the potential to produce an average of 200 pounds of forage/acre on an air-dry basis over the planning period;

- Areas with naturally resilient soils (not unstable or highly erodible soils);

- Areas where ground cover (vegetation, litter, rock greater than 3/4 inches) is sufficient to protect soil from erosion. The minimum percentage cover will be 60 percent unless local data is available for use in setting more specific ground cover requirements;

- Areas accessible to livestock (without such factors as dense timber, rock, or other physical barriers); and

- Area within one mile of water or where the ability to provide water exists.

Capability is determined using all these criteria together but they may be modified if documented data indicates changes are warranted; or, additional criteria may be developed if local conditions warrant. National Forest System lands meeting these criteria are considered capable of being grazed by domestic livestock with management.

Rangeland capability was mapped at a site-specific level, by allotment, when range analysis was done in the 1960s and 1970s. However, for this Forest Planning effort, a GIS model was used to map capable acres using only three of the criteria described above. The model used:

- Slopes (less than 45 percent for sheep and less than 30 percent for cattle);
- Distance from water (one mile for sheep and cattle); and,
- The vegetative cover type. Vegetative cover was used as a proxy for forage production based on an earlier assessment documented in "A Hierarchical Stratification of Ecosystems of the Caribou National Forest" which gives a range of estimated forage production by vegetation type.

In this assessment of capability, soils were not used, because the mapping units are a mixture of various soil families, and they are not specific to a particular location on the ground. Ground cover was not used, because there is no data in GIS for mapping this criterion. Accessibility was not mapped, because it must be determined at the site-specific level. Data Sources used in the model included:

- Ownership of Forest Lands came from Cartographic Feature Files (CFFs);
- Slope was determined from USGS 30-meter Digital Elevation Model (DEMs);
- Vegetation came from the Vegetation Cover Types of the Caribou National Forest; and
- Water sources were taken from a Forest inventory GIS layer

Model Results

Slopes and distance from water were taken directly from the CFFs. Since vegetation cover types were used as a proxy for forage production, decisions were made on which cover types were most likely to be grazed and would produce at least the minimum amount of forage of 200 pounds per acre on an air-dry basis. Aspen/conifer, aspen, aspen/maple, riparian, grass/shrub, mountain brush, Douglas-fir, juniper, maple, and mahogany cover types were selected, because these are types most resource professionals consider as "rangelands," and because the "Hierarchal Strategies of Ecological Units on the Caribou National Forest" report indicates these types have average production figures associated with them-that were mapped during earlier range analyses, which showed these vegetation types produce at least 200 pounds per acre of air dry forage.

The model showed that about 719,000 acres on the Forest are capable of supporting sheep grazing, and 469,000 acres are capable of supporting cattle grazing. More land is capable of supporting sheep because they are smaller, lighter animals and can graze on steeper slopes without causing soil damage. These numbers are similar to the 1985 Forest Plan, which determined approximately 700,000 acres were capable of sustaining livestock grazing.

Because a computer model was used to estimate the acres, the final acre figure for capable rangelands should be considered a conservative estimate that can be re-analyzed on a site-specific basis as the need arises. It should also be

noted that other cover types may undergo some degree of grazing, but they were not included, because the entire cover type may not be capable of supporting grazing by domestic animals. On the other hand, some of the cover types that were included as capable also may not have the entire cover type capable of being grazed. An example is the aspen/conifer cover type. Areas where conifers have not yet heavily invaded the site still provide plenty of forage. Sites that have reverted to mostly conifer would provide relatively little forage, and so may not meet the criteria on a site-specific basis for capable lands.

In addition, land that is determined to be "not capable" does not mean that livestock may not occasionally be present or trail across the land (Washington Office Letter, 4/25/97). "Not capable" does mean the land would not support livestock on a sustained basis. Acres meeting the capability criteria are no longer used in setting stocking rates or the permitted numbers on the grazing permits. Livestock will be seen on non-capable acres and may even graze it lightly on occasion. "Non-capable acres" will not be fenced to exclude all livestock grazing (Washington Office Letter, 4/25/97). "Capable acres" are where livestock spend most of their time and where management is focused. These are the acres of land where monitoring, both short-term for annual impacts or variations of use and long-term to determine trend toward meeting the projected goals and desired future conditions, take place.

DATA SOURCES

The following information was gathered or developed to determine capable rangelands and maps developed which displayed the information:

- Ownership from CFFs (Cartographic Feature Files)
- Slope by 10% breaks from DEMs (USGS 30-meter Digital Elevation Model)
- Vegetation Cover Types of the Caribou National Forest producing more than 200 pounds forage per acre using the "Hierarchal Stratification of Ecological Units on the Caribou NF" (USDA-FS, 1997).
- Location of water sources (perennial streams or point sources from inventory)

CRITERIA AND PROCESS FOR DETERMINING SUITABILITY

Criteria

Rangeland suitability represents the integration of land capability and the appropriateness of grazing livestock on a particular area of land, considering such things as economics, social concerns, and grazing compatibility with other land uses.

Suitability is assessed by alternative and determines whether livestock grazing is compatible with management direction for a management area's other uses and values. Some situations or conflicts can often be mitigated (for example, through fencing), making an area suitable for livestock when it would not be otherwise. Suitable and non-suitable lands may appear within a single allotment. Non-suitable lands will not be fenced to keep livestock out in most cases.

Suitable acres must first be capable of supporting livestock grazing and meet the capability criteria discussed above. Suitable acres can change over time or under different management options. For example, mining restoration sites would not be suitable while they were being restored. If they are restored to meet the criteria of capability and there were no social or economic values or other uses pre-empting grazing use, then they might become suitable after mining ceases and restoration goals are met.

Process

The ID team met and collectively determined suitability criteria for each alternative based on the theme/emphasis of the alternative. In addition to the criteria chosen, the team considered using other factors, but these were dropped. This

additional information can be found in the Capability and Suitability Process Paper and IDT meeting notes located in the Project File. The final suitability recommendations were discussed and approved by the Forest Leadership Team. The following rules were followed in determining rangeland suitability:

- Acres had to be capable of supporting grazing (they met the criteria described above);
- Capable acres already having standards and guidelines in a management prescription that do not allow livestock grazing were subtracted from the suitable base (i.e., they were determined to be unsuitable); and
- Based on the theme of each alternative, the team determined which, if any, additional acres should be considered unsuitable.

Some areas were considered unsuitable in **ALL alternatives**. These are:

- Research Natural Areas in prescription 2.2. (Establishment Reports for RNAs exclude grazing as a condition of establishment of the RNA.);
- Developed recreation sites in prescription 4.1. This is a conflict with the users and livestock are generally fenced out;
- All of the Pocatello Watershed. It was designated by Congress to maintain water quality and quantity;
- Portions of the Mill Creek and Elkhorn watersheds on the Westside Ranger District, which have been closed to grazing until watershed restoration is achieved; and
- Mining reclamation areas showing unacceptable levels of selenium that are toxic to SHEEP and would therefore be considered unsuitable TO SHEEP ONLY.

In addition, each alternative was assessed for unsuitable grazing lands based on the theme or emphasis featured in the alternative. Rationale is included with each bullet statement.

ALTERNATIVES 1, 2 AND 3

In this alternative, no change in livestock suitability determinations occurred between the Draft EIS and this Final EIS. In addition to the areas considered unsuitable in ALL alternatives, the following lands were also considered unsuitable for livestock grazing in Alternative 1:

- Lands within the Grace Watershed in prescription 2.1.3 because this was part of and included in the 1985 Forest Plan. (Alternative 1, the No Action alternative, projects the effects of continuing management under the 1985 Forest Plan).

ALTERNATIVE 4

The re-analysis of rangeland suitability changed between the Draft EIS and this Final EIS for this alternative. In addition to the areas that apply to ALL alternatives, other areas determined to be unsuitable for livestock grazing in this alternative include:

- Lands within the Grace Watershed in prescription 2.1.3 because this was in the 1985 Forest Plan;
- 303(d) streams and the drainage directly affecting that segment (immediately surrounding the segment). The entire watershed containing that WQLS segment would not be unsuitable because many areas within the 6th code HUC's are removed from the 303(d) segment, and grazing in these areas does not directly affect the improvement of the 303(d) stream. Also, many streams cross private land and then flow back onto the Forest requiring coordination of uses with adjacent landowners to affect stream improvement. See map of 303(d) stream segments in project file;

- Tarweed sites in Diamond Flat, Green Canyon, Franklin Basin, Egan Basin Danish Pass, Crows Nest, Church Hollow are considered not suitable for livestock grazing because of scheduled restoration actions. Until these are achieved, the areas are unsuitable for grazing;

- The Black Canyon leafy spurge site on the Westside District is considered not suitable for CATTLE GRAZING ONLY in this alternative. Restoration actions, if successful, would make it suitable at some point in time.

ALTERNATIVE 5

The re-analysis of livestock suitability between the Draft and Final EIS changed in this alternative. In addition to the areas that apply to ALL alternatives, unsuitable areas also include:

- Lands within the Grace Watershed in prescription 2.1.3 because this was in the 1985 plan.

- 303(d) streams and the drainage directly affecting that segment (immediately surrounding the segment). The entire watershed containing that WQLS segment would not be unsuitable because many areas within the 6th code HUC's are removed from the 303(d) segment, and grazing in these areas does not directly affect the improvement of the 303(d) stream. Also, many streams cross private land and then flow back onto the Forest requiring coordination of uses with adjacent landowners to affect stream improvement. See map of 303(d) stream segments in project file;

- Recreation areas: Mink Creek Recreation Area (Prescription 4.3), Cub River, McCoy Creek, Pebble Creek, Bloomington (Prescription 4.3). The entire wild area within the prescription boundary would be considered unsuitable.

- Wild and Scenic River eligible sites along St. Charles Creek and Elk Valley Marsh are considered not suitable for livestock grazing because of the high recreation use in St. Charles Canyon and the need to protect unique plant communities and wetland areas around Elk Valley Marsh.

ALTERNATIVE 6

The re-analysis of suitability between the draft and final EIS changed in this alternative. In addition to the areas that apply to ALL alternatives, it includes:

- Lands within the Grace Watershed in prescription 2.1.3.

- 303(d) streams and the drainage directly affecting that segment (immediately surrounding the segment). The entire watershed containing that WQLS segment would not be unsuitable because many areas within the 6th code HUC's are removed from the 303(d) segment, and grazing in these areas does not directly affect the improvement of the 303(d) stream. Also, many streams cross private land and then flow back onto the Forest requiring coordination of uses with adjacent landowners to affect stream improvement. See map of 303(d) stream segments in project file;

- Tarweed sites in Diamond Flat, Green Canyon, Franklin Basin, Egan Basin Danish Pass, Crows Nest, Church Hollow are considered no suitable for livestock grazing because of scheduled restoration actions. Until these are achieved, the areas are unsuitable for grazing.

- The Black Canyon leafy spurge site on the Westside District is considered not suitable for CATTLE GRAZING ONLY in this alternative. Restoration actions, if successful, would make it suitable at some point in time.

- Recreation areas: Mink Creek Recreation Area (Prescription 4.3), Cub River, McCoy Creek, Pebble Creek, Bloomington (Prescription 4.3). The entire wild area within the prescription boundary would be considered unsuitable.

- Wild and Scenic River eligible sites along St. Charles Creek and Elk Valley Marsh are considered not suitable for livestock grazing because of the high recreation use in St. Charles Canyon and the need to protect unique plant communities and wetland areas around Elk Valley Marsh.

- Strongholds for Yellowstone and Bonneville Cutthroat Trout: Watersheds in these areas were determined to be not suitable for livestock grazing because of the need to maintain or improve stream and aquatic habitat condition for these sensitive fish species.

ALTERNATIVE 7

The re-analysis of suitability between the draft and final EIS changed in this alternative. In addition to those areas for ALL alternatives it includes:

- Lands within the Grace Watershed in prescription 2.1.3.

- Recreation Areas: Bloomington Lake, Cub River, and the Mink Creek Special Management Areas (Prescription 4.3) were determined to be not suitable because of high recreation demands.

- Tarweed sites in Diamond Flat, Green Canyon, Franklin Basin, Egan Basin Danish Pass, Crows Nest, and Church Hollow are considered not suitable for livestock grazing because of scheduled restoration actions. Until these are achieved, the areas are unsuitable for grazing.

- The Black Canyon leafy spurge site on the Westside District is considered not suitable for CATTLE GRAZING ONLY in this alternative. Restoration actions, if successful, would make it suitable at some point in time.

- Wild and Scenic River eligible sites along St. Charles Creek and Elk Valley Marsh are considered not suitable for livestock grazing because of the high recreation use in St. Charles Canyon and the need to protect unique plant communities and wetland areas around Elk Valley Marsh.

ALTERNATIVE 7R (SELECTED ALTERNATIVE IN RECORD OF DECISION)

The same areas as in Alternative 7 were determined to be unsuitable to livestock grazing in this alternative. In addition, the Gravel Creek Riparian Area was also determined to be unsuitable.

- *Table B. 14 Summary of Range Capability/Suitability Matrix for Cattle.*

Capability Suitability	Factor	Alt 1	Alt 2	Alt 3	Alt 4	Alt 5	Alt 6	Alt 7	Alt 7R
Capability	Slopes greater than 30%	Not Capable	Not Capable	Not Capable	Not Capable	Not Capable	Not Capable	Not Capable	Not Capable
Capability	Distance from water greater than 1 mile	Not Capable	Not Capable	Not Capable	Not Capable	Not Capable	Not Capable	Not Capable	Not Capable
Capability	Covertype[1]: Rock, water, lodgepole pine, Mixed conifer, Mixed conifer2	Not Capable	Not Capable	Not Capable	Not Capable	Not Capable	Not Capable	Not Capable	Not Capable

Capability Suitability	Factor	Alt 1	Alt 2	Alt 3	A lt 4	Alt 5	Alt 6	Alt 7	A lt 7R
	Management Prescriptions	Alt 1	Alt 2	Alt 3	Alt 4	Alt 5	Alt 6	Alt 7	Alt 7R
Suitability	Research Natural Areas (Rx 2.2)	Not Suitable	Not Suitable	Not Suitable	Not Suitable	Not Suitable	Not Suitable	Not Suitable	Not Suitable
Suitability	Wild & Scenic River Eligible Sites (Rx 2.5) St Charles, Elk Valley Marsh	-------	-------	-------	-------	Not Suitable	Not Suitable	Not Suitable	Not Suitable
Suitability	Gravel Creek Riparian Area (Rx 2.1.6)	N/A	N/A	N/A	N/A	N/A	N/A	N/A	Not Suitable
	Watershed/ Fish	Alt 1	Alt 2	Alt 3	Alt 4	Alt 5	Alt 6	Alt 7	Alt 7R
Suitability	Municipal Watersheds (Rx 2.1.3) Pocatello and Grace Watersheds	Not Suitable	Not Suitable	Not Suitable	Not Suitable	Not Suitable	Not Suitable	Not Suitable	-------
	Pocatello Watershed Only								Not Suitable
Suitability	Yellowstone, Bonneville Cutthroat Trout Strongholds	-------	-------	-------	-------	-------	Not Suitable	-------	-------
Suitability	303(D) Stream Segments and Immediately Adjacent Watershed	-------	-------	-------	Not Suitable	Not Suitable	Not Suitable	-------	-------
	Recreation	Alt 1	Alt 2	Alt 3	Alt 4	Alt 5	Alt 6	Alt 7	Alt 7R
Suitability	Developed Recreation Sites, including campgrounds, trailheads, etc.	Not Suitable	Not Suitable	Not Suitable	Not Suitable	Not Suitable	Not Suitable	Not Suitable	Not Suitable
Suitability	Dispersed Recreation Sites (Rx 4.3)								
	Set 1: Mink Creek, Cub River, McCoy Creek, Pebble Creek, Bloomington Lake (Buffers are ¼ mile except Cub River which is 300 feet) and Montpelier Reservoir as shown in Alternative	-------	-------	-------	-------	Not Suitable	Not Suitable	-------	-------
	Set 2: Mink Creek, Cub River (Buffers are ¼ mile except Cub River which is 300 feet) and Montpelier Reservoir as shown in Alternative					-------	-------	Not Suitable	Not Suitable
	Range	Alt 1	Alt 2	Alt 3	Alt 4	Alt 5	Alt 6	Alt 7	Alt 7R

Capability Suitability	Factor	Alt 1	Alt 2	Alt 3	A lt 4	Alt 5	Alt 6	Alt 7	A lt 7R
Suitability	Areas Specifically Identified (Westside Ranger District 3 polygons)	Not Suitable	Not Suitable	Not Suitable	Not Suitable	Not Suitable	Not Suitable	Not Suitable	Not Suitable
Suitability	Invasive Plants (Tarweed)	-------	-------	-------	Not Suitable	Not Suitable	Not Suitable	Not Suitable	Not Suitable
Suitability	Noxious Weeds (Black Canyon)	-------	-------	-------	Not Suitable	Not Suitable	Not Suitable	Not Suitable	Not Suitable

1 Cover types considered "capable" for cattle are aspen, aspen/conifer, aspen/maple, maple, Douglas-fir, juniper, mountain mahogany, grass/shrub, mountain brush, riparian areas.

- *Table B. 15 Summary of Range Capability/Suitability Matrix for Sheep.*

Capability Suitability	Factor	Alt 1	Alt 2	Alt 3	A lt 4	Alt 5	Alt 6	Alt 7	A lt 7R
Capability	Slopes greater than 45%	Not Capable	Not Capable	Not Capable	Not Capable	Not Capable	Not Capable	Not Capable	Not Capable
Capability	Distance from water greater than 1 mile	Not Capable	Not Capable	Not Capable	Not Capable	Not Capable	Not Capable	Not Capable	Not Capable
Capability	Covertype: Rock, water, lodgepole pine, Mixed conifer, Mixed conifer2	Not Capable	Not Capable	Not Capable	Not Capable	Not Capable	Not Capable	Not Capable	Not Capable
	Management Prescriptions	Alt 1	Alt 2	Alt 3	Alt 4	Alt 5	Alt 6	Alt 7	Alt 7R
Suitability	Research Natural Areas (Rx 2.2)	Not Suitable	Not Suitable	Not Suitable	Not Suitable	Not Suitable	Not Suitable	Not Suitable	Not Suitable
Suitability	Wild & Scenic River Eligible Sites (Rx 2.5) St Charles, Elk Valley Marsh	-------	-------	-------	-------	Not Suitable	Not Suitable	Not Suitable	Not Suitable
Suitability	Gravel Creek Riparian Area (Rx 2.1.6)	N/A	N/A	N/A	N/A	N/A	N/A	N/A	Not Suitable
	Watershed/ Fish	Alt 1	Alt 2	Alt 3	Alt 4	Alt 5	Alt 6	Alt 7	Alt 7R
Suitability	Municipal Watersheds (Rx 2.1.3) Pocatello and Grace Watersheds	Not Suitable	Not Suitable	Not Suitable	Not Suitable	Not Suitable	Not Suitable	Not Suitable	-------
	Pocatello Watershed Only								Not Suitable
Suitability	Yellowstone, Bonneville Cutthroat Trout Strongholds	-------	-------	-------	-------	-------	Not Suitable	-------	-------
Suitability	303(D) Stream Segments and	-------	-------	-------	Not Suitable	Not Suitable	Not Suitable	-------	-------

Capability Suitability	Factor	Alt 1	Alt 2	Alt 3	A lt 4	Alt 5	Alt 6	Alt 7	A lt 7R
	Immediately Adjacent Watershed								
	Recreation	Alt 1	Alt 2	Alt 3	Alt 4	Alt 5	Alt 6	Alt 7	Alt 7R
Suitability	Developed Recreation Sites, including campgrounds, trailheads, etc.	Not Suitable	Not Suitable	Not Suitable	Not Suitable	Not Suitable	Not Suitable	Not Suitable	Not Suitable
Suitability	Dispersed Recreation Sites (Rx 4.3)								
	Set 1: Mink Creek, Cub River, McCoy Creek, Pebble Creek, Bloomington Lake (Buffers are ¼ mile except Cub River which is 300 feet) and Montpelier Reservoir as shown in Alternative	-------	-------	-------	-------	Not Suitable	Not Suitable	-------	-------
	Set 2: Mink Creek, Cub River (Buffers are ¼ mile except Cub River which is 300 feet) and Montpelier Reservoir as shown in Alternative					-------	-------	Not Suitable	Not Suitable
	Range	Alt 1	Alt 2	Alt 3	Alt 4	Alt 5	Alt 6	Alt 7	Alt 7R
Suitability	Areas Specifically Identified (Westside Ranger District 3 polygons)	Not Suitable	Not Suitable	Not Suitable	Not Suitable	Not Suitable	Not Suitable	Not Suitable	Not Suitable
Suitability	Invasive Plants (Tarweed)	-------	-------	-------	Not Suitable	Not Suitable	Not Suitable	Not Suitable	Not Suitable
Suitability	Noxious Weeds (Black Canyon)	-------	-------	-------	Not Suitable	Not Suitable	Not Suitable	Not Suitable	Not Suitable
Suitability	Phosphate Mine Reclamation Areas (Selenium)	Not Suitable	Not Suitable	Not Suitable	Not Suitable	Not Suitable	Not Suitable	Not Suitable	Not Suitable

1 Cover types considered "capable" for sheep are aspen, aspen/conifer, aspen/maple, maple, Douglas-fir, juniper, mountain mahogany, grass/shrub, mountain brush, riparian areas.

• *Table B. 16 Changes in Suitable Cattle Acres by Alternative.*

Alternative	Acres	Asp Con Acres	Asp/Map Acres	Aspen Acres	DougFir Acres	Gr/Shr Acres	Juniper Acres	Mahog Acres	Maple Acres	MtnBr Acres	Rip Acres
Capable Acres	**469,162**	**64,839**	**7,293**	**91,094**	**61,481**	**199,595**	**1,769**	**5,725**	**12,466**	**21,433**	**4,113**
Suitable Acres											
Alt 1-3	460,303	64,744	7,242	89,925	59,543	196,067	1,659	5,625	11,949	20,162	3,387
Alt 4	407,942	59,056	6,835	79,109	50,800	172,159	1,433	5,408	10,933	19,390	2,819
Alt 5	401,051	58,830	6,835	77,734	50,395	168,876	1,433	5,278	10,671	18,734	2,265
Alt 6	255,269	32,067	6,784	53,192	30,306	100,729	1,376	4,912	10,202	14,725	976
Alt 7	452,251	64,259	6,835	88,790	58,778	192,200	1,651	5,331	11,527	20,027	2,853
Alt 7R	452,621	64,278	6,835	88,792	58,835	192,232	1,651	5,367	11,751	20,027	2,853

• *Table B. 17 Changes in Suitable Sheep Acres by Alternative.*

Alternative	Potential Acres	Asp Con Acres	Asp/Map Acres	Asp Acres	Doug-fir Acres	Gr/Shr Acres	Juniper Acres	Mahog Acres	Maple Acres	MtnBr Acres	Rip Acres
Capable Acres	**718,745**	**97,436**	**13,255**	**132,934**	**107,032**	**295,379**	**4,587**	**11,752**	**20,009**	**32,218**	**4,143**
Suitable Acres											
Alt 3	701,942	97,269	13,144	131,150	103,346	287,715	4,350	11,354	19,096	30,496	4,022
Alt 4	630,160	89,320	13,144	115,969	89,083	257,111	4,043	11,261	17,692	29,190	3,347
Alt 5	621,256	88,895	13,144	114,364	88,410	252,925	4,043	10,999	17,341	28,396	2,739
Alt 6	403,149	47,411	13,052	79,387	55,282	155,153	3,831	10,289	16,329	21,223	1,192
Alt 7	693,115	96,909	12,599	129,867	102,360	283,615	4,330	10,897	18,746	30,340	3,452
Alt 7R	694,066	96,945	12,599	129,837	102,625	283,694	4,330	11,027	19,180	30,340	3,452

POTENTIAL FORAGE OUTPUT BY ALTERNATIVE

A calculation of potential forage was made to show the amount of forage outputs based on suitable acres in each alternative. These calculations are **estimates only** and should not be extrapolated to determine actual carrying capacities or other site-specific parameters on individual grazing allotments. The calculations were based on the number of suitable acres in each alternative and the proposed upland and riparian utilization standards contained within each of the alternatives.

Production was based on figures from the report, "A Hierarchical Stratification of Ecosystems of the Caribou National Forest", February 1997. Appendix B in the report is entitled, "Cover Type Production/Site Data for Ranger Districts on the Caribou National Forest."

The production numbers in the report were summarized by community type from actual Site or Ocular Analysis forms used during the range analysis process of the 1960s, 1970s and into the 1980s. The community types were averaged for an average Ranger District production figure by cover type. For the purposes of the Forest Plan calculations, the Ranger District averages were used to arrive at a production figure for the Forest for each cover type. No production figures were available for the riparian communities. Therefore, a professional estimate of 1,500 to 2,000 pounds per acre was made, and a mid-point of 1,750 pounds per acre was used in the AUM calculations. The following table shows the

community types, capable acres for sheep and cattle, percent of the total vegetation community type that is considered capable within the Forest, and the pounds of potential production used in the AUM estimates for each cover type:

- *Table B. 18 Potential Production by Community Type.*

Community Type	Cattle		Sheep		Production Potential
	Capable Acres	Percent of Type	Capable Acres	Percent of Type	(Pounds/Acre) per Year
Aspen	91,094	57%	132,934	83%	1,041 lbs.
Aspen/Conifer	64,839	59%	97,436	89%	805 lbs.
Aspen/Maple	7,293	39%	13,255	71%	1,016 lbs.
Douglas-fir	61,481	43%	107,032	75%	655 lbs.
Grass/Shrub (Sagebrush)	199,595	55%	295,379	81%	937 lbs.
Juniper	1,769	15%	4,587	38%	440 lbs.
Mahogany	5,725	29%	11,752	59%	710 lbs.
Maple	12,466	51%	20,009	81%	990 lbs.
Mountain Brush	21,433	55%	32,218	82%	1,052 lbs.
Riparian	3,440	83%	3,946	95%	1,750 lbs.

Formula for Potenial Forage Outputs by Alternative

The acres identified as suitable for sheep in each alternative were multiplied by the average production per acre per year in each vegetation community type and summed. The suitable sheep acres were used because they include suitable acres for cattle. An average of 719,001,770 pounds of forage production per year (in total) was calculated for capable lands. This number relates to forage production and not herbage production. When range analysis was completed in the 1960s – 1980s, range conservationists recorded production for species that were considered "Desirable and Intermediate" for forage. Production figures were recorded in dry weight per acre.

Using GIS, the non-suitable acres in each alternative were subtracted from each vegetation community type in which they appeared. For example, in Alternative 1, the current situation, 719,001,770 pounds of production are produced by the suitable acres. These acres are all considered suitable for livestock grazing, except for the Po catello and Grace watersheds, Research Natural Areas, developed recreation sites, portions of the Mill Creek and Elkhorn watersheds closed for watershed restoration, and mining reclamation areas showing unacceptable selenium content. The remaining suitable acres were multiplied by the Potential Production figure for the vegetation community type to arrive at the total forage output. If a range of herbage production was suggested, the mid-point was used (See Table B.13). Then, utilization rates proposed in each alternative were used to calculate the potential available forage for each alternative. This process was repeated for each of the alternatives.

- *Table B. 19 Potential Forage Production Output by Alternative.*

Alternative	Suitable Acres		Total Forage Production in Pounds	
	Cattle Range	Sheep Range	Cattle Range	Sheep Range
Alt 1	460,303	701,942	419,495,065	626,425,756
Alt 2	460,303	701,942	419,495,065	626,425,756
Alt 3	460,303	701,942	419,495,065	626,425,065
Alt 4	407,942	630,160	367,116,042	569,066,965
Alt 5	401,051	621,256	361,119,499	555,495,370
Alt 6	255,269	403,149	233,684,494	342,921,492
Alt 7	452,251	693,115	411,678,569	624,896,221
Alt 7R	452,625	694,066	412,010,585	625,761,005

Forage production estimates were summed for each alternative, multiplied by the suggested herbage utilization rate for that alternative and then divided by the average amount of forage used by an animal during one month of grazing. For cattle, a cow and a 450-pound calf will average about 36 pounds of forage per day. Over a month they will ingest 1,080 pounds of forage (36 pounds per day times 30 days). For sheep, a ewe and an 80- to 90-pound lamb will use 7 pounds of forage per day. Over a month they will ingest 210 pounds of forage (7 pounds per day times 30 days). Estimates of forage use by sheep and cattle are from the 1964 Range Analysis handbook. The results of these calculations are shown in Table B.15.

For calculation purposes, a cow and 450-pound calf were used. Also, estimates were based on cow/calves, because the majority of permits issued on the Forest are for cattle. A ratio of 1:5 cow/calves to ewe/lambs was used to convert cows to sheep. For example, five sheep animal months are equivalent to one cow animal month. This equalizes the numbers so they can be compared.

- *Table B. 20 Calculation of Potential AUMs Based on Potential Forage Production on Suitable Acres and Utilization Rates in Each Alternative.*

Alternative	Suitable Acres		Total Forage Production in Pounds		Herbage	Potential Capacity (based on uniform use)	
	Cattle	Sheep	Cattle	Sheep	Use Rate	Cattle	Sheep
Alt 1	460,303	701,942	419,495,065	626,425,756	55%	213,632	1,640,639
Alt 2	460,303	701,942	419,495,065	626,425,756	45%	174,790	1,342,340
Alt 3	460,303	701,942	419,495,065	626,425,065	45%	174,790	1,342,340
Alt 4	407,942	630,160	367,116,042	569,066,965	45%	152,965	1,219,429
Alt 5	401,051	621,256	361,119,499	555,495,370	45%	150,463	1,190,347
Alt 6	255,269	403,149	233,684,494	342,921,492	45%	97,369	734,832
Alt 7	452,251	693,115	411,678,569	624,896,221	45%	171,533	1,339,256
Alt 7R	452,625	694,066	412,010,585	625,761,005	45%	171,671	1,340,916

** Potential Capacity measured as Cow/Calf Month (1,080 lbs./mo)
** Potential Capacity measured as Ewe/Lamb Month (210 lbs./mo)

EXAMPLE USING ALTERNATIVE 1

Step 1

Start with the "total pounds of forage outputs from capable acres" 719,001,770 pounds/acre/year. (This starting point is the same for all alternatives.)

Step 2

Calculate capable acres and production considered "non-suitable" in Alternative 1 to get the "pounds of forage not available."

Step 3

Subtract "pounds of forage not available" from the "total pounds of forage (719,001,770 pounds) and Subtotal. The subtotal is the "potential pounds of forage available" in Alternative 1.

Step 4

Using the "potential pounds of forage available" from Step 3, multiply by .55 (midpoint between 50 percent and 60 percent utilization level proposed in this alternative) and subtotal. This figure represents the "estimated pounds of forage available" on suitable acres in this alternative, based on proposed utilization rates."

Step 5

Divide the "estimated pounds of forage available" from Step 4 by 1,080 pounds (36 pounds of forage for cow/calf day times 30 days per month) or by 210 pounds (7 pounds of forage for ewe/lamb day times 30 days per month). The resulting number is the total estimated potential AUMs available on suitable acres in this alternative.

REPEAT THIS PROCESS FOR EACH ALTERNATIVE.

The Project File contains all of the calculations for Potential Production and Estimated Potential AUMS by alternative.

LG3 CHANGES IN ACTUAL USED BASED ON CURRENT MANAGEMENT

VARIABLES

Prescribed Burning

As described in Chapter 4, *Ecosystem Management, Non-Forested Vegetation Diversity*, between 6,000 and 13,000 acres of sagebrush and mountain shrub vegetation would be treated annually using prescribed fire, depending on treatment proposals in each alternative. Nearly all of these acres are likely to be within grazing allotments and are capable and suitable for livestock grazing. To accomplish these treatments, livestock grazing practices would need to be adjusted. Treatment areas that are burned must be rested from livestock grazing for at least one year prior to treatment to build an adequate amount of fine fuels to carry fire. After treatment (burning) these areas usually need at least a two-year rest from grazing to restore plant vigor and ground cover. As a result, treated areas would likely not be grazed for at least three years, depending on vegetation response to fire and whether or not the desired conditions are achieved. In some cases the areas that are burned may be lightly used or grazed as early as two years after a fire, but only if the desired conditions are achieved.

Using a minimum three-year cycle for treatment projects, an estimated 18,000 acres to 39,000 acres would not be available for livestock grazing on an annual basis beginning in Year 3. Between 1,200 and 2,600 AUMs of grazing would be unavailable annually. An estimated sixty-five percent, or between 780 AUMs and 1,690 AUMs, would come from cattle allotments.

Prescribed burning would also occur in the forested ecosystems of the Forest. Depending on treatment proposals in the alternatives, between 1,740 acres and 4,990 acres will be treated. Treatment on these areas is not expected to significantly affect livestock grazing activities or available forage.

Forage Utilization Standards

To determine changes in AUMs by alternative, the forage use standards described in Chapter 2, were used. These include upland utilization, riparian grazing (all parameters), and winter range forage utilization levels. For alternatives 4, 7, and 7R, the current version of the Caribou Riparian Grazing Implementation Guide was used. To make the calculations, these standards were sent to the District personnel. District rangeland managers determined what amount of a reduction, if any, would be required to meet the grazing standards for each allotment. This process was repeated by alternative. Rangeland managers based their calculations on the amount of time it takes to reach allowable use with current management. Historic range data on actual use was used to validate their information. Many of the potential reductions could be eliminated or reduced through on-the-ground changes such as more herding, strategic salting, etc. Allotment specific data can be found in the Project File.

Suitability Analysis

As described previously, in alternative 4 – 7R, suitable acres have changed from the DEIS and the current situation. The AUMs associated with unsuitable areas were subtracted from currently permitted AUMs. Because vegetation types vary on the unsuitable lands, an average of 5 acres/AUM was used. For example, in alternative 7R, approximately

11,035 acres that currently suitable for cows would become unsuitable due to the new analysis. Using an average of 5 acres per AUM, there would be 2,207 AUMs unavailable (11,035 acres / 5 acres/AUM).

EXAMPLE USING ALTERNATIVE 1

Approximately 20,000[1] cattle (71,707 AUMs) and about 69,000[2] sheep (37,441 AUMs) currently graze the forest. Livestock management and grazing systems are used to maintain or improve forage outputs for livestock and wildlife and to protect and improve watershed conditions and coordinate with other uses.

No forest-wide riparian livestock utilization levels or stubble heights would be implemented in this Alternative. Utilization rates and/or stubble heights would continue to be determined at the site-specific level through the Allotment Management Planning (AMP) process. The upland browse utilization on key plants ranges between thirty-five percent and forty-five percent, with the utilization on key herbaceous vegetation ranging between fifty and sixty percent. No criteria are used for soil and/or streambank disturbance. (See Chapter 2, Alternative 1 and Table 2.3 for additional information.)

In this Alternative, approximately 13,000 acres of sagebrush and/or mountain shrub would be treated with prescribed fire. Treating 13,000 acres annually would result in a loss of about 2,600 AUMs annually at the forest-wide scale (13,000 acres / 5 acres/AUM = 2,600 AUMs). Using a minimum three-year cycle for treated areas, approximately 39,000 acres, producing 7,800 AUMs of forage, would be unavailable for grazing beginning in Year 3 of the Revised Forest Plan. Approximately sixty-five percent (65%) or 5,070 AUMs would come from cattle allotments. There are no other reduction factors in this alternative.

SUMMARY

- *Table B. 21 Estimated Potential Change in Current Cattle Animal Unit Months (AUMs) based on current management by Alternative.*

Potential Reduction Factor	**Potential Loss of AUMs**							
	Alt. 1	**Alt. 2**	**Alt. 3**	**Alt. 4**	**Alt. 5**	**Alt.6**	**Alt. 7**	**Alt.7R**
Existing AUMs	**71,707**	**71,707**	**71,707**	**71,707**	**71,707**	**71,707**	**71,707**	**71,707**
Riparian and Upland Use Criteria	0	2,208	205	7,791 to 12,756	9,034 to 14,606	14,387 to 14,784	7,791 to 12,756	7,791 to 12,756
Winter Range Rx 2.7.1, 2.7.2	0	0	0	906	733	757	410	410
Recreation, Unique Ecosystems (Unsuitable)	0	0	0	0	3,857	3,857	2,207	2,207
Nonfunctioning/303d listed streams (Unsuitable)	0	0	0	5,225	5,225	5,225	0	0
Prescribed burning	5,070	3,023	3,900	3,023	2,761	2,340	3,110	1,555
Yellowstone and Bonneville strongholds (Unsuitable)	0	0	0	0	0	20,407	0	0
Existing AUMs - potential lost AUMs	66,637	66,476	67,602	49,797 to 54,762	44,525 to 50,097	24,337 to 24,734	53,224 to 58,189	54,779 to 59,744
Percent Change from Existing	**-7%**	**-7%**	**-6%**	**-24% to –31%**	**-30% to – -38%**	**-65% to - 66%**	**-19% to –26%**	**-17% to –24%**

[1] These numbers are rounded to the nearest thousand.
[2] These numbers are rounded to the nearest thousand.

- *Table B. 22 Estimated Potential Change in Current Sheep Animal Unit Months (AUMs) based on current management by Alternative.*

Potential Reduction Factor	Potential Loss of AUMs							
	Alt. 1	Alt. 2	Alt. 3	Alt. 4	Alt. 5	Alt.6	Alt. 7	Alt.7R
Existing AUMs	**37,441**	**37,441**	**37,441**	**37,441**	**37,441**	**37,441**	**37,441**	**37,441**
Riparian and Upland Use Criteria	0	320	0	517	517	1,199	517	5217
Winter Range Rx 2.7.1, 2.7.2	0	0	0	517	517	517	517	517
Recreation, Unique Ecosystems (Unsuitable)	0	0	0	0	0	0	0	0
Nonfunctioning/303d listed streams (Unsuitable)	0	0	0	5,225	0	0	0	0
Prescribed burning	2,730	1,627	2,100	1,627	1,487	1,260	1,005	520
Yellowstone and Bonneville strongholds (Unsuitable)	0	0	0	0	0	19,216	0	0
Existing AUMs - potential lost AUMs	34,711	35,494	35,341	34,780	34,920	15,249	35,402	35,904
Percent Change from Existing	**-7%**	**-5%**	**-6%**	**-7%**	**-7%**	**-59%**	**-5%**	**-4%**

LG 4: UPLAND VEGETATION RESPONSE TO GRAZING

See Livestock Section in Chapters 3 and 4.

WILDLIFE CAPACITY ESTIMATE

- *Table B. 23 Estimated Herbaceous Forage Potentially Available for Wildlife on Suitable Range by Alternative.*

Alternative ↓	Total # forage on capable sheep range (A)	Total # forage on suitable sheep range (B)	# forage available for wildlife on capable but not suitable sheep range ((A – B) * 100% = C)	% of forage available to wildlife on suitable sheep range (E)	# of forage potentially available for wildlife on suitable sheep range (B * E = F)	Total forage available for wildlife on suitable and capable but not suitable sheep range (C + F)	Total forage available to wildlife (C + F) shown as:			
							Animal Unit Months ((C+F)/1080 = G)	Antelope Months	Mule Deer Months	Elk Months
Alt 1	719,346,520	626,425,756	92,920,764	45	218,891,590	311,812,354	288,715	3,464,580	2,309,720	721,787
Alt 2	719,346,520	626,425,756	92,920,764	55	344,534,165	437,454,930	405,050	4,860,610	3,240408	1,012,625
Alt 3	719,346,520	626,425,065	92,921,455	55	344,533,790	437,455,245	405,051	4,860,610	3,240408	1,012,625
Alt 4	719,346,520	569,066,965	150,279,555	55	312,986,830	463,266,385	428,950	5,147,400	3,431,600	1,072,375
Alt 5	719,346,520	555,495,370	163,851,150	55	305,522,450	469,373,600	434,605	5,215,260	3,476,840	1,086,512
Alt 6	719,346,520	342,921,492	376,425,028	55	188,606,820	565,031,848	523,177	6,278,124	4,185,416	1,307,942
Alt 7	719,346,520	624,896,221	94,450,299	55	343,692,920	438,143,219	405,688	4,868,256	3,245,504	1,014,220
Alt 7R	719,346,520	625,761,005	93,585,515	55	344,168,550	437,754,065	405,327	4,863,924	3,242,616	1,013,317

Antelope months = (G * (1080 #/AUM divided by 90 #/antelope month)) = (G * 12)
Mule Deer months = (G * (1080 #/AUM divided by 135 #/antelope month)) = (G * 8)

Elk months = (G * (1080 #/AUM divided by 425 #/elk month)) = (G * 2.5)

Issue 5 Minerals, Reclamation and Hazardous Substances

Baseline Information

SUMMARY

The acres anticipated to be disturbed by phosphate mining related activity during the planning period were developed based on past mining activity, coupled with information on existing mine plan approvals and future mining proposals. The level of development is not subject to Forest Service discretion. Thousands of acres of National Forest System lands are currently under Federal phosphate lease; leases that convey to the lessees the rights to extract the phosphate resources. Whether or not all or any of the existing leases will be mined, and in what sequence, is not determined by the Forest Service, but by industry exercising their rights, based on the economics associated with phosphate resource development. Because phosphate mining and reclamation methods are changing, the determination of probable or anticipated impacts from the potential release of selenium or possibly other hazardous substancesmaterials from mining disturbances is impossible to accurately predict. Federal and State water quality standards must legally be met. Potential impacts to surface resources are discussed in the endividual resource area sections in the EIS. Environmental analyses will be completed for each new surface-disturbing minerals-related proposal received.

The clean-up or remediation of past and present hazardous substances asscoiated with phosphate mining on the Forest will be handled through Forest Service authorities under the Comprehensive Environmental Response, Compensation, and Liability Act (CERCLA). Activities under this authority are outside the scope of the Forest Plan, although standards and guidelines in the Forest Plan will be considered for their applicability as requirements in CERCLA actions.

No oil/gas leasing will occur as a result of this Forest Plan Revision, therefore no impacts or analysis are necessary. A separate NEPA document would be needed before leasing could occur;; that documents/decisions from that process would amend the plan and disclose associated impacts. Although not precluded in the Forest Plan, it is not anticipated that there will be any applications for geothermal leases during the planning period.

Locatable mineral development has been virtually non-existent (except the Caribou Basin area) for the past several years; that trend is anticipated to continue through the planning period.

Issue 6

Watershed/Riparian Areas

EFFECTS OF ALTERNATIVES ON SOIL, WATERSHED, WATER QUALITY, RIPARIAN AND AQUATIC SYSTEMS

INTRODUCTION

In an ecosystem, no part stands alone. The very nature of a watershed depends on interdependence and interaction of all the physical and biological elements contained within the watershed (Leopold, 1997). The condition of the entire watershed, including the uplands and tributary watershed system, needs to be evaluated as a whole. The watershed can influence the quality, quantity, and stability of downstream resources by controlling production of sediment and nutrients, influencing streamflow, and modifying the distribution of chemicals throughout the riparian wetland area.

Riparian health refers to the ecological status of vegetation, geomorphic and hydrologic development, along with the degree of structural integrity exhibited by the riparian area. A healthy riparian area is in dynamic equilibrium with the streamflow forces and sediments. In a healthy condition, the channel network can adjust to handle moderate changes in stormflow/ snowmelt runoff with minimal disturbance of the channel and associated riparian plant communities (Prichard 1998). Therefore, the entire system is analyzed, from overall watershed function and health, to in-channel processes. Activities that have a potential to have measurable affects on these systems are analyzed by alternative.

SCALE OF ANALYSIS

Analysis of direct, indirect, irretrievable, irreversible and cumulative effects in this EIS for watershed and related resources is done primarily at the Project Work Inventory (PWI) scale. The Caribou National Forest is comprised of twenty-two PWI watersheds. The PWI watersheds are a grouping of 5th HUCs into somewhat homogenous areas. About fifty 5th HUC watersheds occur within the Forest, and about one hundred and fifty 6th HUCs. Trying to analyze impacts and determine effects for such a large number of areas is complex and inefficient. Paring down the number of analysis areas into similar areas is more efficient and it enables the reader to better grasp the relative consequences or differences between alternatives. The PWI scale is able to aggregate cumulative impacts assessed at the finer, 6th HUC or stream reach scales, yet is still small enough to prevent dilution of information in a larger 4th HUC scale assessment.

RESOURCE PROTECTION METHODS AND BEST MANAGEMENT PRACTICES

It is assumed that basic resource protection will be incorporated into all land disturbing activities that have the potential to affect watershed, soil, water, riparian and aquatic resources. This assumption is based on existing laws, regulations, and executive orders. These include the Clean Water Act with amendments, Executive Order 11988 and 11990, which govern impacts within floodplains and wetlands, State water quality regulations, etc. Other measures may be more generic or voluntary in nature and put in place by responsible stewards of the public's land. This guidance is in the form of specific Goals, Objectives, Standards and Guidelines found in each of the prescription areas. Further, additional site-specific analysis is required before any land-disturbing activity can occur. This second-level of site-specific analysis provides opportunities to identify and minimize direct, indirect and cumulative environmental effects that cannot be determined at the larger scale of this EIS.

The Forest's water resources have been specifically identified by the public as an area of concern. The health and well being of riparian and aquatic resources is a goal common to all alternatives. Some alternatives address the issue with more stringent measures than others, but all have a common commitment to protecting and, where needed, improving the riparian and aquatic resources. For example, components of INFISH have been integrated into all the alternatives. The Forest's land managers believe this direction is needed for healthy and productive watershed, riparian and aquatic

ecosystems. Some alternatives supplement INFISH direction by providing, for example, additional livestock grazing requirements. Impacts of timber harvesting on watershed and stream channel stability, as well as riparian and aquatic system function and quality, are addressed through the Idaho Forest Practices Act (IDL, 1992). Mining impacts are specifically addressed in each mine's operating plan. Impacts of grazing are specifically addressed in allotment management plans and annual operating plans. Recreation impacts are addressed through individual recreation plans, travel plans and so on.

DISTURBANCE ACTIVITIES

Natural disturbances, such as wildfire, drought, floods, and windstorms can occur almost anywhere at any given time. It is impossible to predict when or where these events may occur, and therefore they cannot be readily analyzed at this programmatic level. As a result, these disturbances are not a part of this analysis. If and when these events occur, their effects will have to be analyzed with ongoin g activities, at the time and place they occur. General effects to watershed resources are described for:

- Timber Harvest
- Livestock Grazing
- Road Disturbances
- Recreation Management
- Minerals Management
- Watershed and Aquatic Restoration
- Prescribed Fire and Wildland Fire Use

Other activities may have an impact on watershed and/or riparian resources. Other potential impacts to these resources include hydropower development, irrigation diversions, noxious weed and insect infestations and control, highway construction, and air pollution. These impacts are expected to be unpredictable or insignificant on a Forest-wide basis or have impacts that are localized that cannot be evaluated at the programmatic level. Where these activities may have a measurable effect at the localized level, they will be dealt with at that level, through site-specific NEPA, special use permits, and/or similar processes. Those activities that may have an intermittent or undetermined or immeasurable effect are not be analyzed as part of this process. Again, any new activities must be evaluated for cumulative effects and the presence of these other activities or processes, if they exist, will be determined at the time the individual projects are assessed.

The following tables dis play how watershed effects were quantified. Qualitative assessment is in Chapters 3 and 4.

TIMBER HARVEST

Acres and types of potential treatments are analyzed at the Forest-wide scale. As such, no definitive effects on specific watersheds can be assessed. However, anticipated harvest can be pro-rated on a watershed basis by calculating the percentage of each watershed that contains a timber harvesting prescription (5.x). That pro-rated percentage can then be applied to the total anticipated harvesting for the decade and a potential disturbance by watershed calculated.

Roads are normally constructed in association with timber harvesting. As with timber harvesting, determinations of potential locations have only been evaluated by total anticipated miles at the Forest level. Therefore, miles of roads, as timber harvesting, are pro-rated within the same watersheds that potential harvesting will occur. Acres disturbed assume that the corridor will be twenty20 feet wide. Acres harvested are obtained from data generated by the Forest's Timber Forester. Road densities are obtained from the Forest's corporate road GIS layer. Watershed acres are derived from the Forest's Watershed GIS corporate layer.

Alternative 1

In this alternative, 16,800 acres of land will be harvested over the next decade. Most watersheds have a pro-rated percentage of disturbance from roads less than one-tenth of one percent. These percentages were rounded up to 0.1 percent for the sake of analysis .

• *Table B. 24 Alternative 1*

Watershed Number	Timber Harvest Rx in Watershed[1] (Acres)	Percent of Total Forest Rx[2] (Percent)	Prorated Potential Harvest Treatment[3] (Acres)	Percent of Watershed Area Harvested[4] (Percent)	Prorated percent of Watershed Disturbed from Roading[5] (Percent)	Total Percent of Watershed Disturbed from Timber Harvesting and Roading[6] (Percent)
1	0	0%	0	0%	0%	0%
2	5,254	2.2%	370	0.1%	0.1[3]%	0.2%
3	24,014	10.0%	1,680	2.5%	0.1%	2.6%
4	0	0%	0	0%	0%	0%
5	2,434	1.0%	168	0.2%	0.1%	0.3%
6	12,344	5.1%	857	1.4%	0.1%	1.5%
7	19,543	8.2%	1,378	2.8%	0.1%	2.9%
8	4,175	1.7%	286	0.4%	0.1%	0.5%
9	0	0%	0	0%	0%	0%
10	1,649	0.6%	101	0.1%	0.1%	0.2%
11	9,245	3.9%	655	1.8%	0.1%	1.9%
12	42,932	18.0%	3,024	3.6%	0.1%	3.7%
13	9,064	3.8%	638	1.6%	0.1%	1.7%
14	2,395	1.0%	168	0.9%	0.1%	1.0%
15	6,923	2.9%	487	0.7%	0.1%	0.8%
16	70,983	29.7%	4,990	4.0%	0.1%	4.1%
17	11,504	4.8%	806	1.6%	0.1%	1.7%
18	0	0%	0	0%	0%	0%
19	777	0.3%	50	0.1%	0.1%	0.2%
20	4,663	2.0%	336	0.8%	0.1%	0.9%
21	851	0.3%	50	0.1%	0.1%	0.2%
26	12,617	5.3%	890	3.3%	0.1%	3.4%

1 From GIS
2 Total Rx acres in each watershed divided by total Rx acres forest-wide.
3 Percent of total Forest Rx times acres of land harvested (e.g. 16,800).
4 Prorated harvested acres divided by total acres in each watershed (from old Forest Plan).
5 Total number of miles to be constructed divided by 22 watersheds divided by individual watershed acres.
6 Sum of columns 5 and 6.

Watersheds 12 (Bear Lake Outlet), 16 (Blackfoot River) and 26 (Logan River) have the highest percentage impact at 3.7 percent, 4.1percent, and 3.4 percent respectively. The remainder of the watersheds shows less than 3 percent of the area impacted by timber harvesting and constructed roads.

Alternative 2

In this alternative 16,700 acres of land will be harvested over the next decade.

- *Table B. 25 Alternative 2*

Watershed Number	Timber Harvest Rx in Watershed[1] (Acres)	Percent of Total Forest Rx[2] (Percent)	Prorated Potential Harvest Treatment[3] (Acres)	Percent of Watershed Area Harvested[4] (Percent)	Prorated Percent of Watershed Disturbed from Roading[5] (Percent)	Total Percent of Watershed Disturbed from Timber Harvesting and Roading[6] (Percent)
1	0	0%	0	0%	0%	0%
2	5,254	2.4%	401	1.2%	0.1%	1.3%
3	22,690	10.1%	1,687	2.6%	0.1%	2.7%
4	0	0%	0	0%	0%	0%
5	1,612	0.7%	117	0.1%	0.1%	0.2%
6	12,341	5.5%	919	1.5%	0.1%	1.6%
7	19,549	8.7%	1,453	3.0%	0.1%	3.1%
8	3,480	1.5%	251	0.1%	0.1%	0.2%
9	0	0%	0	0%	0%	0%
10	1,649	0.7%	117	0.2%	0.1%	0.3%
11	9,216	4.1%	685	1.8%	0.1%	1.9%
12	42,117	18.8%	3,140	3.7%	0.1%	3.8%
13	5,360	2.4%	401	1.0%	0.1%	1.1%
14	2,128	1.0%	167	0.9%	0.1%	1.0%
15	6,926	3.1%	518	0.8%	0.1%	0.9%
16	61,288	27.4%	4,576	3.7%	0.1%	3.8%
17	11,504	5.1%	852	1.8%	0.1%	1.9%
18	0	0%	0	0%	0%	0%
19	629	0.3%	50	0.1%	0.1%	0.2%
20	4,661	2.1%	351	0.8%	0.1%	0.9%
21	851	0.4%	67	0.8%	0.1%	0.9%
26	12,617	6.6%	1,102	4.0%	0.1%	4.1%

1 From GIS
2 Total Rx acres in each watershed divided by total Rx acres forest-wide.
3 Percent of total Forest Rx times acres of land harvested (e.g. 16,800).
4 Prorated harvested acres divided by total acres in each watershed (from old Forest Plan).
5 Total number of miles to be constructed divided by 22 watersheds divided by individual watershed acres.
6 Sum of columns 5 and 6.

Watersheds 7 (Stump Creek), 12 (Bear Lake Outlet), 16 (Blackfoot River) and 26 (Logan River) have the highest percentage impact at 3.1 percent, 3.8 percent, and 3.8 percent and 4.1 percent respectively. The remainder of the watersheds has less than 3 percent of the watershed area impacted by timber harvesting and constructed roads.

Alternative 3

In this alternative, 21,900 acres of land will be harvested over the next decade.

- *Table B. 26 Alternative 3*

Watershed Number	Timber Harvest Rx in Watershed[1] (Acres)	Percent of Total Forest Rx[2] (Percent)	Prorated Potential Harvest Treatment[3] (Acres)	Percent of Watershed Area Harvested[4] (Percent)	Prorated Percent of Watershed Disturbed from Roading[5] (Percent)	Total Percent of Watershed Disturbed from Timber Harvesting and Roading[6] (Percent)
1	1,431	0.4%	88	0.4%	0.1%	0.5%
2	5,254	1.7%	372	1.2%	0.1%	1.3%
3	22,690	7.3%	1,599	2.4%	0.1%	2.5%
4	145	0.1%	22	0.1%	0.1%	0.2%
5	15,967	5.2%	1,139	1.6%	0.1%	1.7%
6	18,470	6.0%	1,314	2.2%	0.1%	2.3%
7	19,543	6.3%	1,380	2.8%	0.1%	2.9%
8	3,480	1.1%	241	0.3%	0.1%	0.4%
9	0	0%	0	0%	0%	0%
10	1,649	0.5%	110	0.2%	0.1%	0.3%
11	19,418	6.3%	1,380	3.7%	0.1%	3.8%
12	56,725	18.4%	4,030	4.7%	0.1%	4.8%
13	12,217	3.9%	854	2.2%	0.1%	2.3%
14	2,800	0.9%	197	1.1%	0.1%	1.2%
15	8,839	2.9%	635	1.0%	0.1%	1.1%
16	81,436	26.4%	5,781	4.7%	0.1%	4.8%
17	11,504	3.7%	810	1.6%	0.1%	1.7%
18	1,630	0.5%	110	0.6%	0.1%	0.7%
19	5,164	1.7%	372	0.8%	0.1%	0.9%
20	4,711	1.5%	329	0.8%	0.1%	0.9%
21	2,186	0.7%	153	1.7%	0.1%	1.8%
26	13,184	4.3%	942	3.4%	0.1%	3.5%

1 From GIS
2 Total Rx acres in each watershed divided by total Rx acres forest-wide.
3 Percent of total Forest Rx times acres of land harvested (e.g. 16,800).
4 Prorated harvested acres divided by total acres in each watershed (from old Forest Plan).
5 Total number of miles to be constructed divided by 22 watersheds divided by individual watershed acres.
6 Sum of columns 5 and 6.

Watersheds 11 (Bear Lake), 12 (Bear Lake Outlet), 16 (Blackfoot River) and 26 (Logan River) have the highest percentage impact at 3.8 percent, 4.8 percent, and 4.8 percent,% and 3.5 percent respectively. The remainder of the watersheds shows less than 3 percent of the watershed area impacted by timber harvesting and constructed roads.

Alternative 4

In this alternative, 7,100 acres of land will be harvested over the next decade.

- *Table B. 27 Alternative 4*

Watershed Number	Timber Harvest Rx in Watershed[1] (Acres)	Percent of Total Forest Rx[2] (Percent)	Prorated Potential Harvest Treatment[3] (Acres)	Percent of Watershed Area Harvested[4] (Percent)	Prorated Percent of Watershed Disturbed from Roading[5] (Percent)	Total Percent of Watershed Disturbed from Timber Harvesting and Roading[6] (Percent)
1	4	0.1%	7	0.1%	0%	0%
2	2,022	1.5%	106	0.3%	0.1%	0.4%
3	15,884	12.1%	859	1.3%	**0.1%**	1.4%
4	0	0%	0	0%	0%	0%
5	0	0%	0	0%	0%	0%
6	5,207	4.0%	284	0.4%	0.1%	0.5%
7	5,219	4.0%	284	0.6%	0.1%	0.7%
8	162	0.1%	57	0.1%	0.1%	0.2%
9	0	0%	0	0%	0%	0%
10	0	0%	0	0%	0%	0%
11	4,951	3.8%	270	0.7%	0.1%	0.8%
12	32,675	25.0%	1,775	2.1%	0.1%	2.2%
13	1,979	1.5%	106	0.3%	0.1%	0.4%
14	3,263	2.5%	178	1.0%	0.1%	1.1%
15	2,762	2.1%	149	0.2%	0.1%	0.3%
16	36,149	27.6%	1,960	1.6%	0.1%	1.7%
17	4,616	3.5%	249	0.5%	0.1%	0.6%
18	0	0%	0	0%	0%	0%
19	22	0.1%	57	0.1%	0.1%	0.2%
20	9,837	7.5%	533	1.3%	0.1%	1.4%
21	514	0.4%	28	0.3%	0.1%	0.4%
26	5,595	4.3%	305	1.1%	0.1%	1.2%

1 From GIS
2 Total Rx acres in each watershed divided by total Rx acres forest-wide.
3 Percent of total Forest Rx times acres of land harvested (e.g. 16,800).
4 Prorated harvested acres divided by total acres in each watershed (from old Forest Plan).
5 Total number of miles to be constructed divided by 22 watersheds divided by individual watershed acres.
6 Sum of columns 5 and 6.

Watersheds 3 (Georgetown), 12 (Bear Lake Outlet), 14 (Grays Lake), 16 (Blackfoot River), 20 (Lower Portneuf) and 26 (Logan River) have the highest percentage impact at 1.4 percent, 2.2 percent, 1.1 percent, 1.7 percent, 1.4 percent and 1.2 percent respectively. The remainder of the watersheds shows less than 1 percent of the watershed area impacted by timber harvesting and constructed roads.

Alternative 5

In this alternative, 6,500 acres of land will be treated over the next decade.

- *Table B. 28 Alternative 5*

Watershed Number	Timber Harvest Rx in Watershed[1] (Acres)	Percent of Total Forest Rx[2] (Percent)	Prorated Potential Harvest Treatment[3] (Acres)	Percent of Watershed Area Harvested[4] (Percent)	Prorated Percent of Watershed Disturbed from Roading[5] (Percent)	Total Percent of Watershed Disturbed from Timber Harvesting and Roading[6] (Percent)
1	**0**	0%	0	0%	0%	0%
2	2,528	2.4%	156	0.5%	0.1%	0.6%
3	8,827	8.4%	2,159	3.3%	0.1%	3.4%
4	0	0%	0	0%	0%	0%
5	1,603	1.5%	98	0.1%	0.1%	0.2%
6	5,060	4.8%	312	0.5%	0.1%	0.6%
7	5,234	5.0%	325	0.5%	0.1%	0.6%
8	1,358	1.3%	85	0.1%	0.1%	0.2%
9	0	0%	0	0%	0%	0%
10	0	0%	0	0%	0%	0%
11	4,897	4.6%	299	0.8%	0.1%	0.9%
12	23,440	22.2%	1,443	1.7%	0.1%	1.8%
13	1,977	1.9%	124	0.3%	0.1%	0.4%
14	6,195	5.9%	384	2.2%	0.1%	2.3%
15	1,949	1.8%	117	0.2%	0.1%	0.3%
16	30,485	28.9%	1,879	1.5%	0.1%	1.6%
17	3,886	3.7%	241	0.5%	0.1%	0.6%
18	0	0%	0	0%	0%	0%
19	120	0.1%	7	0.1%	0.1%	0.2%
20	77	0.1%	7	0.1%	0.1%	0.2%
21	2,140	2.0%	130	1.5%	0.1%	1.6%
26	5,595	5.3%	345	1.3%	0.1%	1.4%

1 From GIS
2 Total Rx acres in each watershed divided by total Rx acres forest-wide.
3 Percent of total Forest Rx times acres of land harvested (e.g. 16,800).
4 Prorated harvested acres divided by total acres in each watershed (from old Forest Plan).
5 Total number of miles to be constructed divided by 22 watersheds divided by individual watershed acres.
6 Sum of columns 5 and 6.

Watersheds 3 (Georgetown), 12 (Bear Lake Outlet), 14 (Grays Lake), 16 (Blackfoot River), 21 (Rattlesnake) and 26 (Logan River) have the highest percentage impact at 3.4 percent, 1.8 percent, 2.3 percent, 1.6 percent, 1.6 percent and 1.4 percent respectively. The remainder of the watersheds shows less than 1 percent of the watershed area imp acted by timber harvesting and constructed roads.

Alternative 6

In this alternative, 4,900 acres of land will be treated over the next decade.

- *Table B. 29 Alternative 6*

Watershed Number	Timber Harvest Rx in Watershed[1] (Acres)	Percent of Total Forest Rx[2] (Percent)	Prorated Potential Harvest Treatment[3] (Acres)	Percent of Watershed Area Harvested[4] (Percent)	Prorated Percent of Watershed Disturbed from Roading[5] (Percent)	Total Percent of Watershed Disturbed from Timber Harvesting and Roading[6] (Percent)
1	0	0%	0	0%	0%	0%
2	0	0%	0	0%	0%	0%
3	11,208	11.5%	563	0.8%	0.1%	0.9%
4	0	0%	0	0%	0%	0%
5	1,845	1.9%	93	0.1%	0.1%	0.2%
6	4,200	4.3%	210	0.3%	0.1%	0.4%
7	2,538	2.6%	127	0.3%	0.1%	0.4%
8	2,567	2.6%	127	0.1%	0.1%	0.2%
9	0	0%	0	0%	0%	0%
10	0	0%	0	0%	0%	0%
11	5,158	5.3%	260	0.7%	0.1%	0.8%
12	20,882	21.4%	1,049	1.2%	0.1%	1.3%
13	2,572	2.6%	127	0.3%	0.1%	0.4%
14	2,914	3.0%	147	0.8%	0.1%	0.9%
15	588	0.6%	29	0.1%	0.1%	0.2%
16	24,739	25.4%	1,245	1.0%	0.1%	1.1%
17	3,886	4.0%	196	0.4%	0.1%	0.5%
18	0	0%	0	0%	0%	0%
19	963	1.0%	49	0.1%	0.1%	0.2%
20	7,893	8.1%	397	1.0%	0.1%	1.1%
21	0	0%	0	0%	0%	0%
26	5,594	5.7%	279	1.0%	0.1%	1.1%

1 From GIS
2 Total Rx acres in each watershed divided by total Rx acres forest-wide.
3 Percent of total Forest Rx times acres of land harvested (e.g. 16,800).
4 Prorated harvested acres divided by total acres in each watershed (from old Forest Plan).
5 Total number of miles to be constructed divided by 22 watersheds divided by individual watershed acres.
6 Sum of columns 5 and 6.

Watersheds 12 (Bear Lake Outlet), 16 (Blackfoot River), 20 (Lower Portneuf) and 26 (Logan River) have the highest percentage impact at 1.3 percent, 1.1 percent, 1.1 percent and 1.1 percent respectively. The remainder of the watersheds shows less than 1 percent of the watershed area impacted by timber harvesting and constructed roads.

Alternative 7

In this alternative, 7,300 acres of land will be treated over the next decade.

- *Table B. 30 Alternative 7*

Watershed Number	Timber Harvest Rx in Watershed[1] (Acres)	Percent of Total Forest Rx[2] (Percent)	Prorated Potential Harvest Treatment[3] (Acres)	Percent of Watershed Area Harvested[4] (Percent)	Prorated Percent of Watershed Disturbed from Roading[5] (Percent)	Total Percent of Watershed Disturbed from Timber Harvesting and Roading[6] (Percent)
1	0	0%	0	0%	0%	0%
2	2,467	2.4%	175	0.6%	0.1%	0.7%
3	9,362	9.1%	664	1.0%	0.1%	1.1%
4	0	0%	0	0%	0%	0%
5	1,163	1.1%	80	0.1%	0.1%	0.2%
6	6,669	6.5%	475	0.8%	0.1%	0.9%
7	4,137	4.0%	292	0.6%	0.1%	0.7%
8	1,848	1.8%	131	0.2%	**0.1%**	0.3%
9	0	0%	0	0%	0%	0%
10	2,993	2.9%	212	0.4%	0.1%	0.5%
11	4,466	4.3%	314	0.8%	0.1%	0.9%
12	22,437	21.8%	1,591	1.9%	0.1%	2.0%
13	3,286	3.2%	234	0.6%	0.1%	0.7%
14	2,187	2.1%	153	0.9%	0.1%	1.0%
15	2,073	2.0%	146	0.2%	0.1%	0.3%
16	27,596	26.7%	1,949	1.6%	0.1%	1.7%
17	4,278	4.2%	307	0.6%	0.1%	0.7%
18	0	0%	0	0%	0%	0%
19	1	0%	0	0%	0.1%	0.1%
20	2,175	2.1%	153	0.4%	0.1%	0.5%
21	38	0.1%	7	0.1%	0.1%	0.2%
26	5,968	5.8%	423	1.5%	0.1%	1.6%

1 From GIS
2 Total Rx acres in each watershed divided by total Rx acres forest-wide.
3 Percent of total Forest Rx times acres of land harvested (e.g. 16,800).
4 Prorated harvested acres divided by total acres in each watershed (from old Forest Plan).
5 Total number of miles to be constructed divided by 22 watersheds divided by individual watershed acres.
6 Sum of columns 5 and 6.

Watersheds 3 (Georgetown), 12 (Bear Lake Outlet), 16 (Blackfoot River) and 26 (Logan River) have the highest percentage impact at 1.1 percent, 2.0 percent and 1.7 percent, and 1.6 percent respectively. The remainder of the watersheds shows 1 percent or less of the watershed area impacted by timber harvesting and constructed roads.

Alternative 7R

In this alternative 12,000 acres of land will be treated over the next decade.

- *Table B. 31 Alternative 7R*

Watershed Number	Timber Harvest Rx in Watershed[1] (Acres)	Percent of Total Forest Rx[2] (Percent)	Prorated Potential Harvest Treatment[3] (Acres)	Percent of Watershed Area Harvested[4] (Percent)	Prorated Percent of Watershed Disturbed from Roading[5] (Percent)	Total Percent of Watershed Disturbed from Timber Harvesting and Roading[6] (Percent)
1	0	0%	0	0%	0%	0%
2	3,114	1.9%	211	0.7%	0.1%	0.8%
3	13,279	8.3%	921	1.4%	0.1%	1.5%
4	0	0%	0	0%	0%	0%
5	3,931	2.4%	266	0.4%	0.1%	0.5%
6	9,874	6.1%	677	1.1%	0.1%	1.2%
7	7,757	4.8%	533	1.1%	0.1%	1.2%
8	0	0%	0	0%	0%	0%
9	0	0%	0	0%	0%	0%
10	0	0%	0	0%	0%	0%
11	3,211	2.0%	222	0.6%	0.1%	0.7%
12	42,195	24.1%	2,675	3.1%	0.1%	3.2%
13	3,218	2.1%	233	0.6%	0.1%	0.7%
14	3,358	2.1%	233	1.3%	0.1%	1.4%
15	8,808	5.5%	611	1.0%	0.1%	1.1%
16	47,873	29.8%	3,308	2.7%	0.1%	2.8%
17	5,315	3.3%	366	0.7%	0.1%	0.8%
18	367	0.2%	22	0.1%	0.1%	0.2%
19	472	0.3%	33	0.1%	0.1%	0.2%
20	2,077	1.3%	144	0.4%	0.1%	0.5%
21	861	0.5%	56	0.1%	0.1%	0.2%
26	8,227	5.1%	566	2.1%	0.1%	2.2%

1 From GIS
2 Total Rx acres in each watershed divided by total Rx acres forest-wide.
3 Percent of total Forest Rx times acres of land harvested (e.g. 16,800).
4 Prorated harvested acres divided by total acres in each watershed (from old Forest Plan).
5 Total number of miles to be constructed divided by 22 watersheds divided by individual watershed acres.
6 Sum of columns 5 and 6.

Watersheds 12 (Bear Lake Outlet), 16 (Blackfoot River) and 26 (Logan River) have the highest percentage impact at 3.2 percent and 2.8 percent, and 2.2 percent respectively. The remainder of the watersheds shows less than 2 percent of the watershed area impacted by timber harvesting and constructed roads.

Summary

The overall impacts of timber harvesting in relation to the percentage of watersheds impacted are negligible in every alternative. Less than 5 percent of any watershed is anticipated to be impacted in any of the alternatives. The following table describes the overall potential to disturb the watersheds by timber harvesting by relating each alternative to the other.

It is assumed there is a linear relationship between the total acres of timber harvested and the potential effects to watersheds. That is, the more timber harvested forest-wide, the greater the potential to degrade watershed values, even though potential effects will be mitigated through the use of BMPs and other standards and guidelines.

• *Table B. 32 Summary of watershed disturbance from timber harvest*

Timber Harvesting	Alt 1	Alt 2	Alt 3	Alt 4	Alt 5	Alt 6	Alt 7	Alt 7R
Total Number of Acres Treated	16,800	16,700	21,900	7,100	6,500	4,900	7,300	11,100
Miles of related roads	81	73	98	17	16	7	18	35
Relative potential to protect watersheds[1]	7	6	8	3	2	1	4	5

1 A rating of "1" has the least potential to disturb watershed function and associated riparian, water quality and aquatic habitat. A rating of "7" has the greatest potential.

ROADS

The effects of roads are included in Timber Harvesting and Recreation Management

RECREATION MANAGEMENT

Alternative 1

This alternative maintains the current management. Motorized vehicle travel is a combination of unrestricted cross-country and designated road and trail routs.

Alternative 2

This alternative maintains current road and trail density, but relocates/redesigns roads/trails out of AIZs where possible. Cross-country summer motorized travel remains unchanged over present.

Alternative 3

This alternative may increase current road and trail densities. Maintains current cross-country summer motorized travel

Alternative 4

This alternative decreases current road and trail densities across the Forest. No summer cross-country motorized travel allowed.

Alternative 5

This alternative would adjust road and trail densities up or down, depending on the prescription area, but total miles remain essentially the same. It reduces the amount of area available for summer cross-country motorized travel from current levels by about 95 percent.

Alternative 6

This alternative decreases road and trail densities from present levels (Alt 1). No summer cross-country motorized travel allowed.

Alternative 7

Road and trail densities could increase in some prescriptions and decrease in others, but total miles will decrease by about 130 miles. About 5,000 less acres open to summer cross-country travel than Alternative 5.

Alternative 7R

Road densities will remain about the same as the present levels across the Forest. Some routs may be closed or some new ones built, conforming to allowable density standards defined in each prescription area. About 6,500 acres more will be accessible to open cross-country travel than Alternative 7.

It is assumed there is a linear relationship between the total miles of road or acres of land available for motorized cross-country travel and potential effects to watersheds.

- *Table B. 33 Summary of watershed disturbance by motorized recreation.*

Recreation Management	Alt 1	Alt 2	Alt 3	Alt 4	Alt 5	Alt 6	Alt 7	Alt 7R
Total Acres Open to X-Country Travel (From Table 4.4)	420,215	420,215	420,215	0	27,800	0	22,900	29,400
Miles of Open Motorized Routes (From Table 2.90)	2,033	2,033	2,033	1,876	1,876	1,298	1,904	1,978
Relative potential to protect watersheds[1]	6	6	6	2	4	1	3	5

1 A rating of "1" has the least potential to disturb watershed function and associated riparian, water quality and aquatic habitat. A rating of "6" has the greatest potential. The ratings are not an order of magnitude (e.g. Alt 3 having 6 times more watershed disturbance than Alt 6); rather the rankings are a simple depiction of relative rankings of one Alternative to another (from Table 4.4 – Acres Open to Cross-Country Motorized Travel and Table 2.90 – Miles of Open Motorized Routes).

PRESCRIBED FIRE AND WILDLAND FIRE USE, MECHANICAL AND CHEMICAL TREATMENT

Treatments are a combination of fire, mechanical and chemical. Some vegetation treatments may have relatively minor land-disturbing impacts. For example, some aspen regeneration treatments may call for simply cutting trees and leaving them on-site. No major access roads will be built and ground cover will not be disturbed. In fact, the felled trees would add to total ground cover, further reducing erosion potential on that site. Another example is areas that are chemically treated to reduce sagebrush canopies. Applied herbicides would reduce canopy cover, but would not disturb ground cover, with little or no hydrologic effects. Some areas may be more disturbed but would recover within a year or two. These more hydrologically benign treatments would effectively allow additional treatment within the same watershed without cumulative temporal (over time) impacts. However, in order to display a worst-case scenario, it is assumed that all treatments have the same relative impacts and hydrologic recovery will not occur within the decade.

The following tables reflect the percentage of forested and non-forested watersheds expected to be impacted by Alternative. Total acres to be treated are those projected by the Forest's Ecologist and Forester. It is assumed there is a linear relationship between acres treated and potential watershed disturbance.

• *Table B. 34* *Alternative 1 - (130,000 acres treated)*

Watershed Number	Watershed Area Within Forest Boundary (Acres)	Potential Area Treated (Acres)	Percent (%) of Watershed Potentially Affected
1	21,720	5,909	27.2%
2	31,137	5,909	19.0%
3	65,679	5,909	9.0%
4	28,337	5,,909	20.9%
5	69,691	5,909	8.5%
6	60,838	5,909	9.7%
7	48,723	5,909	12.1%
8	71,855	5,909	8.2%
9	28,449	5,909	20.8%
10	57,342	5,909	10.3%
11	37,238	5,,909	15.9%
12	85,182	5,909	6.9%
13	38,831	5,909	15.2%
14	17,661	5,909	33.5%
15	62,668	5,909	9.4%
16	123,484	5,909	4.8%
17	49,975	5,909	11.8%
18	17,962	5,909	32.9%
19	48,180	5,909	12.3%
20	40,809	5,909	14.5%
21	8,729	5,909	67.7%
26	27,344	5,909	21.6%

This alternative tentatively treats more acres than any of the other alternatives. Large portions (10 percent or greater[4]) of fifteen15 watersheds would be affected under this alternative. Disturbances within these fifteen15 watersheds range from just over 10 percent in Watershed 10 to nearly 70 percent in Watershed 21. Thirty percent disturbance is approached or exceeded in watersheds 1 (27.2 percent), 14 (33.5 percent), 18 (32.9 percent), and 21 (67.7 percent).

[4] "Ten Percent" has no particular significant hydrological or statistical significance. It is simply used to help the reader compare relative differences in potential disturbances between alternatives.

• *Table B. 35 Alternative 2 - (94,900 acres treated)*

Watershed Number	Watershed Area Within Forest Boundary (Acres)	Potential Area Treated (Acres)	Percent (%) of Watershed Potentially Affected
1	21,720	4,313	19.9%
2	31,137	4,313	13.9%
3	65,697	4,313	6.6%
4	28,337	4,313	15.2%
5	69,691	4,313	6.2%
6	60,838	4,313	7.1%
7	48,723	4,313	8.9%
8	71,855	4,313	6.0%
9	28,449	4,313	15.2%
10	57,342	4,313	7.5%
11	37,238	4,313	11.6%
12	85,182	4,313	5.6%
13	38,831	4,313	11.1%
14	17,661	4,313	24.4%
15	62,668	4,313	6.9%
16	123,484	4,313	3.5%
17	49,975	4,313	8.6%
18	17,962	4,313	24.0%
19	48,180	4,313	9.0%
20	40,809	4,313	10.6%
21	8,729	4,313	49.4%
26	27,344	4,313	15.8%

Eleven watersheds have proposed treatments in excess of 10 percent or more of the watershed area. Percentages in these eleven11 watersheds range from 10.6 percent (Watershed 20) to nearly 50 percent (Watershed 21). Watersheds 14 and 18 have about 24 percent potential disturbance, which is approaching the 30 percent disturbance guideline (Ssee Forest Plan). Watershed 21 tentatively treats nearly 50 percent½ of its watershed area, well in excess of the 30 percent disturbance guideline.

• *Table B. 36* *Alternative 3 – (119,900 acres treated)*

Watershed Number	Watershed Area Within Forest Boundary (Acres)	Potential Area Treated (Acres)	Percent (%) of Watershed Potentially Affected
1	21,720	5450	25.1%
2	31,137	5450	17.5%
3	65,697	5450	8.3%
4	28,337	5450	19.2%
5	69,691	5450	7.8%
6	60,838	5450	9.0%
7	48,723	5450	11.2%
8	71,855	5450	7.6%
9	28,449	5450	19.2%
10	57,342	5450	9.5%
11	37,238	5450	14.6%
12	85,182	5450	6.4%
13	38,831	5450	14.0%
14	17,661	5450	30.9%
15	62,668	5450	8.7%
16	123,484	5450	4.4%
17	49,975	5450	10.9%
18	17,962	5450	30.3%
19	48,180	5450	11.3%
20	40,809	5450	13.4%
21	8,729	5450	62.4%
26	27,344	5450	19.9%

Fourteen watersheds have potential treatments in excess of 10 percent. Potential disturbances within these 14 watersheds range from 10.9 percent (watershed 17) to over 60 percent (Watershed 21). Four watersheds are approaching or exceeding the 30 percent watershed disturbance guideline. These are watersheds 1 (25.1 percent), 14, (30.9 percent), 18 (30.3 percent), and 21 (62.4 percent).

• *Table B. 37* *Alternative 4 – (127,400 acres treated)*

Watershed Number	Watershed Area Within Forest Boundary (Acres)	Potential Area Treated (Acres)	Percent (%) of Watershed Potentially Affected
1	21,720	5,790	26.7%
2	31,137	5,790	18.6%
3	65,697	5,790	8.8%
4	28,337	5,790	20.4%
5	69,691	5,790	8.3%
6	60,838	5,790	9.5%
7	48,723	5,790	11.9%
8	71,855	5,790	8.1%
9	28,449	5,790	20.4%
10	57,342	5,790	10.1%
11	37,238	5,790	15.5%
12	85,182	5,790	6.8%
13	38,831	5,790	14.9%
14	17,661	5,790	32.8%
15	62,668	5,790	9.2%
16	123,484	5,790	4.7%
17	49,975	5,790	11.6%
18	17,962	5,790	32.2%
19	48,180	5,790	12.0%
20	40,809	5,790	14.2%
21	8,729	5,790	66.3%
26	27,344	5,790	21.2%

Fifteen watersheds exceed 10 percent watershed disturbance. These range from 10.1 (Watershed 10) to nearly 70 percent (Watershed 21). Watersheds approaching or exceeding the 30 percent disturbance guideline are watersheds 1 (26.7 percent), 14 (32.8 percent), 18 (32.2 percent) and 21 (66.3 percent).

• *Table B. 38* *Alternative 5 – (90,000 acres treated)*

Watershed Number	Watershed Area Within Forest Boundary (Aacres)	Potential Area Treated (Aacres)	Percent (%) of Watershed Potentially Affected
1	21,720	4,090	18.8%
2	31,137	4,090	13.1%
3	65,697	4,090	6.2%
4	28,337	4,090	14.4%
5	69,691	4,090	5.9%
6	60,838	4,090	6.7%
7	48,723	4,090	8.4%
8	71,855	4,090	5.7%
9	28,449	4,090	14.4%
10	57,342	4,090	7.1%
11	37,238	4,090	11.0%
12	85,182	4,090	4.8%
13	38,831	4,090	10.5%
14	17,661	4,090	23.2%
15	62,668	4,090	6.5%
16	123,484	4,090	3.3%
17	49,975	4,090	8.2%
18	17,962	4,090	22.8%
19	48,180	4,090	8.5%
20	40,809	4,090	10.0%
21	8,729	4,090	46.9%
26	27,344	4,090	15.0%

Eleven watersheds exceed 10 percent potential disturbances. These range from 10 percent (Watershed 20) to nearly 50 percent (Watershed 21). The only watershed that potentially exceedsthe 30 percent disturbance guideline is Watershed 21 which has a projected 46.9 percent disturbance. Watershed 14 has the next highest potential disturbance at 23.2 percent, closely followed by Watershed 18 at 22.8% percent.

• *Table B. 39* *Alternative 6 – (80,800 acres treated)*

Watershed Number	Watershed Area Within Forest Boundary (Acres)	Potential Area Treated (Acres)	Percent (%) of Watershed Potentially Affected
1	21,720	3,672	16.9%
2	31,137	3,672	11.8%
3	65,697	3,672	5.6%
4	28,337	3,672	13.0%
5	69,691	3,672	5.3%
6	60,838	3,672	6.0%
7	48,723	3,672	7.5%
8	71,855	3,672	5.1%
9	28,449	3,672	12.9%
10	57,342	3,672	6.4%
11	37,238	3,672	9.9%
12	85,182	3,672	4.3%
13	38,831	3,672	9.4%
14	17,661	3,672	20.8%
15	62,668	3,672	5.9%
16	123,484	3,672	3.0%
17	49,975	3,672	7.3%
18	17,962	3,672	20.4%
19	48,180	3,672	7.6%
20	40,809	3,672	9.0%
21	8,729	3,672	42.1%
26	27,344	3,672	13.4%

Eight watersheds exceed 10 percent of the watershed as potentially disturbed. These range from 11.8 percent (Watershed 2) to over 40 percent (Watershed 21). The only watershed that potentially exceeds the 30 percent guideline is Watershed 21 which potentially disturbs 42.1 percent of the watershed. The next highest potential watershed disturbance is Watershed 24 (20.8 percent), followed closely by Watershed 18 (20.4 percent).

• *Table B. 40 Alternative 7 – (106,800 acres treated)*

Watershed Number	Watershed Area Within Forest Boundary (Acres)	Potential Area Treated (Acres)	Percent (%) of Watershed Potentially Affected
1	21,720	4,854	22.3%
2	31,137	4,854	15.6%
3	65,697	4,854	7.4%
4	28,337	4,854	17.1%
5	69,691	4,854	7.0%
6	60,838	4,854	8.0%
7	48,723	4,854	10.0%
8	71,855	4,854	6.8%
9	28,449	4,854	17.1%
10	57,342	4,854	8.5%
11	37,238	4,854	13.0%
12	85,182	4,854	5.6%
13	38,831	4,854	12.5%
14	17,661	4,854	27.5%
15	62,668	4,854	7.7%
16	123,484	4,854	3.9%
17	49,975	4,854	9.7%
18	17,962	4,854	27.0%
19	48,180	4,854	10.1%
20	40,809	4,854	11.9%
21	8,729	4,854	55.6%
26	27,344	4,854	17.8%

Thirteen watersheds exceed 10 percent potential disturbance. These range from 10.0 percent potentially disturbed (Watershed 7) to over 55 percent potentially disturbed (Watershed 21). Watersheds that are approaching or exceeding the 30 percent disturbance guideline are watersheds 14 (27.5 percent), 18 (27 percent), and 21 (55.6 percent).

• *Table B. 41* *Alternative 7R – (78,000 acres treated)*

Watershed Number	Watershed Area Within Forest Boundary (Aacres)	Potential Area Treated (Aacres)	Percent (%) of Watershed Potentially Affected
1	21,720	3,545	16.3%
2	31,137	3,545	11.4%
3	65,697	3,545	5.4%
4	28,337	3,545	12.5%
5	69,691	3,545	5.1%
6	60,838	3,545	5.8%
7	48,723	3,545	7.2%
8	71,855	3,545	4.9%
9	28,449	3,545	12.5%
10	57,342	3,545	6.2%
11	37,238	3,545	9.5%
12	85,182	3,545	4.2%
13	38,831	3,545	9.1%
14	17,661	3,545	20.1%
15	62,668	3,545	5.7%
16	123,484	3,545	2.9%
17	49,975	3,545	7.1%
18	17,962	3,545	19.7%
19	48,180	3,545	7.4%
20	40,809	3,545	8.7%
21	8,729	3,545	40.6%
26	27,344	3,545	13.0%

Eight watersheds potentially exceed 10 percent disturbance. These range from 11.4 (Watershed 2) to over 40 percent (Watershed 21). Only a single watershed (Watershed 21) exceeds the 30 percent disturbance guideline (Watershed 21 @ 40.6 percent). The next greatest potential disturbance is in Watershed 14 (20.1 percent), followed closely by Watershed 18 (19.7 percent).

Summary

The overall impacts of prescribed fire, mechanical and chemical treatments in relation to the percentage of watersheds potentially impacted are negligible to substantial in every alternative. Alternative 1 has the largest number of acres proposed to be treated, resulting in the greatest number of watersheds that have 10 percent or more acres disturbed and the largest number of watersheds that approach or exceed the 30 percent Forest Plan disturbance guideline. Alternative 7R has the least amount of proposed treatment acres, resulting in the fewest watersheds exceeding 10 percent disturbance, with only a single watershed exceeding the 30 percent disturbance guideline. The following table describes the overall potential to disturb the watersheds by fire, chemical and mechanical treatments by relating each alternative to the other. It is assumed there is a linear relationship between the total acres treated and potential effects to watersheds. That is, the more acres treated, the greater the potential to degrade watershed values over the short-term, even though potential effects will be mitigated through the use of BMPs and other standards and guidelines. Long-term values may be improved by allowing vegetation to return toward historical conditions.

- *Table B. 42 Summary of impacts to watersheds*

	Alt 1	Alt 2	Alt 3	Alt 4	Alt 5	Alt 6	Alt 7	Alt 7R
Total Acres Treated	130,000	94,900	119,900	127,400	90,000	80,800	106,800	78,000
Relative potential to protect watersheds[1]	8	4	6	7	3	2	5	1

1* A rating of "1" has the least potential to disturb watershed health and associated riparian, water quality and aquatic habitat. A rating of "8" has the greatest potential. The ratings are not an order of magnitude (e.g. Alt 4 having 8 times more watershed disturbance than Alt 1), rather a simple depiction of relative rankings of one Alternative to another. In many instances, watershed conditions may be better following treatment than prior to treatment, which would effectively reverse the ratings. However, hydrologic recovery is directly dependent on the location and intensity of treatment and recovery time could vary greatly between treatment types. Therefore, in order to depict a worst-case scenario, it is assumed that disturbed areas will not recover hydrologically within ten years following treatment.

CUMULATIVE EFFECTS

Past and present watershed disturbances remain constant within each alternative. Only foreseeable disturbances (timber harvesting, livestock grazing, road construction/ closures, etc.) will vary between alternatives. When determining the cumulative effects on watershed health, it is assumed that there is a linear relationship between potential disturbances and potential watershed deterioration. The more acres burned, for example, the greater potential to affect the components of watershed health phases described above. Since it is not specifically known when or where prescribed burning will occur, specific predictions for individual watersheds cannot be made. However, predictions can be generally made on a Forest-wide scale by relating potential disturbances to potential watershed impacts, which in turn can relate alternatives relatively to one-another.

- *Table B. 43 Alternative 1*

Watershed Number	Percent of Watershed Potentially Disturbed from Future Timber Harvesting and Roading over the Next Decade	Percent of Watershed Potentially Affected by Fire and Other Treatments over the Next Decade	Percent of Watershed Impacted by Past Mining, Timber Harvesting and Fires	Total Percent of Watershed Impacted by Past, Present and Foreseeable Activities
1	0%	27.2%	1.7%	28.9%
2	0.2%	19.0%	3.0%	22.2%
3	2.6%	9.0%	12.1%	23.7%
4	0%	20.9%	1.1%	22.0%
5	0.3%	8.5%	1.0%	9.8%
6	1.5%	9.7%	10.6%	21.8%
7	2.9%	12.1%	5.7%	20.7%
8	0.5%	8.2%	0.8%	9.5%
9	0%	20.8%	65.3%	86.1%
10	0.2%	10.3%	4.7%	15.2%
11	1.9%	15.9%	9.2%	27.0%
12	3.7%	6.9%	15.8%	26.4%
13	1.7%	15.2%	18.9%	35.8%
14	1.0%	33.5%	6.8%	41.3%
15	0.8%	9.4%	3.0%	13.2%
16	4.1%	4.8%	26.7%	35.6%
17	1.7%	11.8%	3.9%	17.4%

18	0%	32.9%	1.4%	34.3%
19	0.2%	12.3%	0.4%	12.9%
20	0.9%	14.5%	5.2%	20.6%
21	0.2%	67.7%	5.2%	73.1%
26	3.4%	21.6%	7.5%	32.5%

Watersheds 1, 9, 12, 13, 14, 16, 18 and 21 are potentially approaching or exceeding the 30 percent disturbed watershed guideline.

Watershed 1 (Geneva) has about 27 percent of the watershed that could be treated within the next decade. Cumulative disturbance could exceed 28 percent of the watershed area.

The major impact in Watershed 9 (Jackknife Creek) is a major fire that occurred in the watershed more than a decade ago. The watershed is currently mostly stable, though some landslides have occurred in the watershed in the past five5 years. No timber harvesting is scheduled for the next decade within this watershed, but about 20 percent of the watershed could be treated within the next decade.

Watershed 12 (Bear Lake Outlet) has about 26 percent cumulative disturbance. About 10 percent of the watershed could be harvested or treated over the next decade.

Watershed 13 (Grace) has about a 36 percent cumulative disturbance. About 17 percent of the watershed could be treated by harvesting or other treatments over the next decade.

Watershed 16 (Blackfoot River) has been impacted by mining, road construction and timber harvesting. Proposed harvesting and other vegetation treatments could impact an additional 10 percent of the watershed. Over 35 percent of the watershed will be cumulatively impacted if proposed timber harvesting and other treatments are implemented.

Watershed 18 (Upper Portneuf West) has about 35 percent cumulative disturbance. There is no proposed timber harvesting, but other vegetation treatments could disturb about 33 percent of the watershed.

Watershed 21 is a very small watershed. Cumulative pro-rated treatments could disturb about 73 percent of the total watershed. Only a very small portion of the watershed would be harvested, but a substantial portion of the vegetation could be treated.

- *Table B. 44 Alternative 2*

Watershed Number	Percent of Watershed Potentially Disturbed from Future Timber Harvesting and Roading over the Next Decade	Percent of Watershed Potentially Affected by Fire and Other Treatments over the Next Decade	Percent of Watershed Impacted by Past Mining, Timber Harvesting and Fires	Total Percent of Watershed Impacted by Past, Present and Foreseeable Activities
1	0%	19.9%	1.7%	21.6%
2	1.3%	13.9%	3.0%	18.2%
3	2.7%	6.6%	12.1%	21.4%
4	0%	15.2%	1.1%	16.3%
5	0.2%	6.2%	1.0%	7.4%
6	1.6%	7.1%	10.6%	19.3%
7	3.1%	8.9%	5.7%	17.7%
8	0.2%	6.0%	0.8%	7.0%
9	0%	15.2%	65.3%	80.5%
10	0.3%	7.5%	4.7%	12.5%
11	1.9%	11.6%	9.2%	22.7%
12	3.8%	5.6%	15.8%	25.2%
13	1.1%	11.1%	18.9%	31.1%

14	1.0%	24.4%	6.8%	32.2%
15	0.9%	6.9%	3.0%	10.8%
16	3.8%	3.5%	26.7%	34.0%
17	1.9%	8.6%	3.9%	14.4%
18	0%	24.0%	1.4%	25.4%
19	0.2%	9.0%	0.4%	9.6%
20	0.9%	10.6%	5.2%	16.7%
21	0.9%	49.4%	5.2%	55.5%
26	4.1%	15.8%	7.5%	27.4%

Watersheds 9, 12, 13, 14, 16, 18, 21 and 26 all have cumulative impacts tentatively approaching or exceeding 30 percent of the watershed area.

The major impact in Watershed 9 (Jackknife Creek) is a major fire that occurred in the watershed more than a decade ago. The watershed is currently mostly stable, though some landslides have occurred in the watershed in the past five5 years. No timber harvesting is scheduled for the next decade within this watershed, but about 15 percent of the watershed could be treated within the next decade.

Watershed 12 (Bear Lake Outlet) has about 25 percent cumulative disturbance. Nearly 10 percent of the watershed could be harvested or treated over the next decade.

Watershed 13 (Grace) has about a 31 percent`% cumulative disturbance. About 12 percent of the watershed could be treated by harvesting or other treatments over the next decade.

Watershed 14 (Grays Lake) has about 32 percent cumulative disturbance. Nearly 25 percent of the watershed could be harvested or other vegetation treatments over the next decade.

Watershed 16 (Blackfoot River) has been impacted by mining, road construction and timber harvesting. Proposed harvesting and burning could impact an additional 7 percent of the watershed. Over 30 percent of the watershed will be cumulatively impacted if proposed timber harvesting and other vegetation treatments are implemented.

Watershed 18 (Upper Portneuf West) could have about 25 percent cumulative impacts. No timber harvesting is proposed, but about 24 percent of the watershed could be treated.

Watershed 21 (Rattlesnake) is a very small watershed. About 55 percent of the watershed could be cumulative impacted. Less than 1 percent of the watershed is proposed to be harvested, but nearly half of the watershed could be treated.

Watershed 26 (Logan River) could have about 27 percent of the watershed cumulatively disturbed. About 20 percent of the watershed could be disturbed from harvesting and other vegetation treatments.

• *Table B. 45 Alternative 3*

Watershed Number	Percent of Watershed Potentially Disturbed from Future Timber Harvesting and Roading over the Next Decade	Percent of Watershed Potentially Affected by Fire and Other Treatments over the Next Decade	Percent of Watershed Impacted by Past Mining, Timber Harvesting and Fires	Total Percent of Watershed Impacted by Past, Present and Foreseeable Activities
1	0.5%	25.1%	1.7%	27.3%
2	1.3%	17.5%	3.0%	21.8%
3	2.5%	8.3%	12.1%	22.9%
4	0.2%	19.2%	1.1%	20.5%
5	1.7%	7.8%	1.0%	10.5%
6	2.3%	9.0%	10.6%	21.9%
7	2.9%	11.2%	5.7%	19.8%
8	0.4%	7.6%	0.8%	8.8%
9	0%	19.2%	65.3%	84.5%
10	0.3%	9.5%	4.7%	14.5%
11	3.8%	14.6%	9.2%	27.6%
12	4.8%	6.4%	15.8%	27.0%
13	2.3%	14.0%	18.9%	35.2%
14	1.2%	30.9%	6.8%	38.9%
15	1.1%	8.7%	3.0%	12.8%
16	4.8%	4.4%	26.7%	35.9%
17	1.7%	10.9%	3.9%	16.5%
18	0.7%	30.3%	1.4%	32.4%
19	0.9%	11.3%	0.4%	12.6%
20	0.9%	13.4%	5.2%	19.5%
21	1.8%	62.4%	5.2%	69.4%
26	3.5%	19.9%	7.5%	30.9%

Watersheds 1, 9, 11, 12, 13, 14, 16, 18, 21 and 26 all have tentative cumulative impacts approaching or exceeding the 30 percent disturbance guideline of the watershed area.

Watershed 1 (Geneva) has little harvesting proposed, but could treat nearly 25 percent of the watershed. Total cumulative impacts could exceed 27 percent.

The major impact in Watershed 9 (Jackknife Creek) is a major fire that occurred in the watershed more than a decade ago. The watershed is currently mostly stable, though some landslides have occurred in the watershed in the past five5 years. No timber harvesting is scheduled for the next decade within this watershed, but about 20 percent of the watershed could be treated within the next decade.

Watershed 11 (Bear Lake) has about 28 percent of the watershed potentially cumulatively disturbed. About 10 percent of the potential disturbance is from proposed timber harvesting and vegetation treatments.

Watershed 12 (Bear Lake Outlet) could have about 27 percent cumulative disturbance. Over 10 percent of the watershed could be harvested or treated over the next decade.

Watershed 13 (Grace) could have about a 35 percent cumulative disturbance. About 17 percent of the watershed could be treated by harvesting or other treatments over the next decade.

Watershed 14 (Grays Lake) could have nearly 40 percent of the watershed cumulatively disturbed. Over 30 percent of the watershed could be treated over the next decade.

Watershed 16 (Blackfoot River) has been impacted by mining, road construction, and timber harvesting. Proposed harvesting and other treatments could impact an additional 10 percent of the watershed. Over 35 percent of the watershed would be cumulatively impacted if proposed timber harvesting and other vegetation treatments are implemented.

Watershed 18 (Upper Portneuf West) could have about 32 percent of the watershed cumulatively impacted. Less than 1 percent of the watershed is proposed to have additional harvesting, but about 30 percent of the watershed could be treated.

Watershed 21 (Rattlesnake) could have about 70 percent of the watershed cumulatively impacted. The majority of the disturbance would come from vegetation treatments.

Watershed 26 (Logan River) could have about 31 percent of the watershed cumulatively impacted. About 20 percent of the disturbance would come from vegetation treatments.

- *Table B. 46 Alternative 4*

Watershed Number	Percent of Watershed Potentially Disturbed from Future Timber Harvesting and Roading over the Next Decade	Percent of Watershed Potentially Affected by Fire and Other Treatments over the Next Decade	Percent of Watershed Impacted by Past Mining, Timber Harvesting and Fires	Total Percent of Watershed Impacted by Past, Present and Foreseeable Activities
1	0%	26.7%	1.7%	28.4%
2	0.4%	18.6%	3.0%	22.0%
3	1.4%	8.8%	12.1%	22.3%
4	0%	20.4%	1.1%	21.5%
5	0%	8.3%	1.0%	9.3%
6	0.5%	9.5%	10.6%	20.6%
7	0.7%	11.9%	5.7%	18.3%
8	0.2%	8.1%	0.8%	9.1%
9	0%	20.4%	65.3%	85.7%
10	0%	10.1%	4.7%	14.8%
11	0.8%	15.5%	9.2%	25.5%
12	2.2%	6.8%	15.8%	24.8%
13	0.4%	14.9%	18.9%	34.2%
14	1.1%	32.8%	6.8%	40.7%
15	0.3%	9.2%	3.0%	12.5%
16	1.7%	4.75	26.7%	33.1%
17	0.6%	11.6%	3.9%	16.1%
18	0%	32.2%	1.4%	33.6%
19	0.2%	12.0%	0.4%	12.6%
20	1.4%	14.2%	5.2%	20.8%
21	0.4%	66.3%	5.2%	71.9%
26	1.2%	21.2%	7.5%	29.9%

Watersheds 1, 9, 11, 12, 13, 14, 16, 18, 21 and 26 all have potential cumulative impacts approaching or exceeding 30 percent of the watershed area.

Watershed 1 (Geneva) has no harvesting proposed, but could treat nearly 27 percent of the watershed. Total cumulative impacts could exceed 28 percent.

The major impact in Watershed 9 (Jackknife Creek) is a major fire that occurred in the watershed more than a decade ago. The watershed is currently mostly stable, though some landslides have occurred in the watershed in the past five5

years. No timber harvesting is scheduled for the next decade within this watershed, but about 20 percent of the watershed could be treated over the next decade.

Watershed 11 (Bear Lake) could have about 25 percent of the watershed potentially cumulatively disturbed. About 16 percent of the potential disturbance would be from proposed timber harvesting and vegetation treatments, with the majority from vegetation treatments.

Watershed 12 (Bear Lake Outlet) could have about 25 percent cumulative disturbance. About 9 percent of the watershed could be harvested or treated over the next decade.

Watershed 13 (Grace) could have about a 34 percent cumulative disturbance. Over 15 percent of the watershed could be treated by harvesting or other vegetation treatments over the next decade.

Watershed 14 (Grays Lake) could have over a 40 percent projected cumulative dis turbance. About 34 percent of the watershed could be treated by harvesting or other vegetation treatments over the next decade.

Watershed 16 (Blackfoot River) has been impacted by mining, road construction and timnber harvesting. Proposed harvesting and vegetation treatments are expected to impact an additional 6 percent of the watershed. Over 33 percent of the watershed could be cumulatively impacted if proposed timber harvesting and vegetation treatments are implemented.

Watershed 18 (Upper Portneuf West) could have about 34 percent of the watershed cumulatively impacted. No timber harvesting is proposed, but about 32 percent of the watershed could be treated over the next decade.

Watershed 21 (Rattlesnake) has about 72 percent projected cumulative disturbance. Over 66 percent of the watershed could be treated by harvesting or vegetation treatments over the next decade.

Watershed 26 (Logan River) could have about 30 percent of the watershed cumulatively impacted. About 22 percent of the disturbance would come from vegetation treatments and timber harvesting.

- *Table B. 47 Alternative 5*

Watershed Number	Percent of Watershed Potentially Disturbed from Future Timber Harvesting and Roading over the Next Decade	Percent of Watershed Potentially Affected by Fire and Other Treatments over the Next Decade	Percent of Watershed Impacted by Past Mining, Timber Harvesting and Fires	Total Percent of Watershed Impacted by Past, Present and Foreseeable Activities
1	0%	18.8%	1.7%	20.5%
2	0.6%	13.1%	3.0%	16.7%
3	3.4%	6.2%	12.1%	21.7%
4	0%	14.4%	1.1%	15.5%
5	0.2%	5.9%	1.0%	7.1%
6	0.6%	6.7%	10.6%	17.9%
7	0.6%	8.4%	5.7%	14.7%
8	0.2%	5.7%	0.8%	6.7%
9	0%	14.4%	65.3%	79.7%
10	0%	7.1%	4.7%	11.8%
11	0.9%	11.0%	9.2%	21.1%
12	1.8%	4.8%	15.8%	22.4%
13	0.4%	10.5%	18.9%	29.8%
14	2.3%	23.2%	6.8%	32.3%
15	0.3%	6.5%	3.0%	9.8%
16	1.6%	3.3%	26.7%	31.6%
17	0.6%	8.2%	3.9%	12.7%
18	0%	22.8%	1.4%	24.2%

19	0.2%	8.5%	0.4%	9.1%
20	0.2%	10.0%	5.2%	15.4%
21	1.6%	46.9%	5.2%	53.7%
26	1.4%	15.0%	7.5%	23.9%

Watersheds 9, 13, 14, 16, and 21 have projected cumulative impacts that could approach or exceeding 30 percent of the watershed area.

The major impact in Watershed 9 (Jackknife Creek) is a major fire that occurred in the watershed more than a decade ago. The watershed is currently mostly stable, though some landslides have occurred in the watershed in the past five5 years. No timber harvesting is scheduled for the next decade within this watershed, but about 14 percent of the watershed could be treated within the next decade.

Watershed 13 (Grace) could have about a 30 percent cumulative disturbance. Over 10 percent of the watershed could be treated by harvesting or other vegetation treatments over the next decade.

Watershed 14 (Grays Lake) could have over 32 percent projected cumulative disturbance. About 23 percent of the watershed could be treated by harvesting or other vegetation treatments over the next decade.

Watershed 16 (Blackfoot River) has been impacted by mining, road construction and timber harvesting. Proposed harvesting and additional vegetation treatments could impact an additional 4.9 percent of the watershed. Over 31 percent of the watershed could be cumulatively impacted if proposed timber harvesting and vegetation treatments are implemented.

Watershed 21 (Rattlesnake) could have about 54 percent projected cumulative disturbance. Over 48 percent of the watershed could be treated by harvesting or vegetation treatments over the next decade.

- *Table B. 48 Alternative 6*

Watershed Number	Percent of Watershed Potentially Disturbed from Future Timber Harvesting and Roading over the Next Decade	Percent of Watershed Potentially Affected by Fire and Other Treatments over the Next Decade	Percent of Watershed Impacted by Past Mining, Timber Harvesting and Fires	Total Percent of Watershed Impacted by Past, Present and Foreseeable Activities
1	0%	16.9%	1.7%	18.6%
2	0%	11.8%	3.0%	14.8%
3	0.9%	5.6%	12.1%	18.6%
4	0%	13.0%	1.1%	14.1%
5	0.2%	5.3%	1.0%	6.5%
6	0.4%	6.0%	10.6%	17.0%
7	0.4%	7.5%	5.7%	13.6%
8	0.2%	5.1%	0.8%	6.1%
9	0%	12.9%	65.3%	78.2%
10	0%	6.4%	4.7%	11.1%
11	0.8%	9.9%	9.2%	19.9%
12	1.3%	4.3%	15.8%	21.4%
13	0.4%	9.4%	18.9%	28.7%
14	0.9%	20.8%	6.8%	28.5%
15	0.2%	5.9%	3.0%	9.1%
16	1.1%	3.0%	26.7%	30.8%
17	0.5%	7.3%	3.9%	11.7%
18	0%	20.4%	1.4%	21.8%
19	0.2%	7.6%	0.4%	8.2%

20	1.1%	9.0%	5.2%	15.3%
21	0%	42.1%	5.2%	47.3%
26	1.1%	13.4%	7.5%	22.0%

Watersheds 9, 13, 14, 16 and 21 have potential cumulative impacts approaching o r exceeding 30 percent of the watershed area.

The major impact in Watershed 9 (Jackknife Creek) is a major fire that occurred in the watershed more than a decade ago. The watershed is currently mostly stable, though some landslides have occurred in the watershed in the past five5 years. No timber harvesting is scheduled for the next decade within this watershed, but about 13 percent of the watershed could be treated.

Watershed 13 (Grace) could have about 29 percent cumulative disturbance. Nearly 10 percent of the watershed could be treated by harvesting or other vegetation treatments over the next decade.

Watershed 14 (Grays Lake) could have over 28 percent projected cumulative disturbance. About 21 percent of the watershed could be treated by harv esting or other vegetation treatments over the next decade.

Watershed 16 (Blackfoot River) has been impacted by mining, road construction and timnber harvesting. Proposed harvesting and other vegetation treatments are tentatively proposed to impact an additional 4.1 percent of the watershed. Nearly 31 percent of the watershed could be cumulatively impacted if proposed timber harvesting and other vegetation treatments are implemented.

Watershed 21 (Rattlesnake) could have about 47 percent projected cumulative disturbance. Over 42 percent of the watershed could be treated by harvesting or vegetation treatments over the next decade.

- *Table B. 49 Alternative 7*

Watershed Number	Percent of Watershed Potentially Disturbed from Future Timber Harvesting and Roading over the Next Decade	Percent of Watershed Potentially Affected by Fire and Other Treatments over the Next Decade	Percent of Watershed Impacted by Past Mining, Timber Harvesting and Fires	Total Percent of Watershed Impacted by Past, Present and Foreseeable Activities
1	0%	22.3%	1.7%	24.0%
2	0.7%	15.6%	3.0%	19.3%
3	1.1%	7.4%	12.1%	20.6%
4	0%	17.1%	1.1%	18.2%
5	0.2%	7.0%	1.0%	8.2%
6	0.9%	8.0%	10.6%	19.5%
7	0.7%	10.0%	5.7%	16.4%
8	0.3%	6.8%	0.8%	7.9%
9	0%	17.1%	65.3%	82.4%
10	0.5%	8.5%	4.7%	13.7%
11	0.9%	13.0%	9.2%	23.1%
12	2.0%	5.6%	15.8%	23.4%
13	0.7%	12.5%	18.9%	32.1%
14	1.0%	27.5%	6.8%	35.3%
15	0.3%	7.7%	3.0%	11.0%
16	1.7%	3.9%	26.7%	32.3%
17	0.7%	9.7%	3.9%	14.3%
18	0%	27.0%	1.4%	28.4%
19	0.1%	10.1%	0.4%	10.6%
20	0.5%	11.9%	5.2%	17.6%
21	0.2%	55.6%	5.2%	61.0%
26	1.6%	17.8%	7.5%	26.9%

Watersheds 9, 13, 14, 16, 18, 21 and 26 have tentative cumulative impacts approaching or exceeding 30 percent of the watershed area.

The major impact in Watershed 9 (Jackknife Creek) is a major fire that occurred in the watershed more than a decade ago. The watershed is currently mostly stable, though some landslides have occurred in the watershed in the past five5 years. No timber harvesting is scheduled for the n ext decade within this watershed, but about 17 percent of the watershed could be treated.

Watershed 13 (Grace) could have about a 32 percent cumulative disturbance. Nearly 13 percent of the watershed could be treated by harvesting or other vegetation tre atments over the next decade.

Watershed 14 (Grays Lake) could have over 35 percent projected cumulative disturbance. About 28 percent of the watershed could be treated by harvesting or other vegetation treatments over the next decade.

Watershed 16 (Blackfoot River) has been impacted by mining, road construction and timber harvesting. Proposed harvesting and other vegetation treatments are tentatively expected to impact an additional 5.6 percent of the watershed. Nearly 32 percent of the watershed could be cumulatively impacted if proposed timber harvesting and vegetation treatments are implemented.

Watershed 18 (Upper Portneuf West) could have about 28 percent of the watershed cumulatively impacted. No timber harvesting is proposed, but about 27 percent of the watershed could be treated over the next decade.

Watershed 21 (Rattlesnake) has about 61 percent projected cumulative disturbance. Over 55 percent of the watershed could be treated by harvesting or vegetation treatments over the next dec ade.

Watershed 26 (Logan River) could have about 27 percent of the watershed cumulatively impacted. About 18 percent of the disturbance would come from vegetation treatments and timber harvesting.

- *Table B. 50 Alternative 7R*

Watershed Number	Percent of Watershed Potentially Disturbed from Future Timber Harvesting and Roading over the Next Decade	Percent of Watershed Potentially Affected by Fire and Other Treatments over the Next Decade	Percent of Watershed Impacted by Past Mining, Timber Harvesting and Fires	Total Percent of Watershed Impacted by Past, Present and Foreseeable Activities
1	0%	16.3%	1.7%	18.0%
2	0.8%	11.4%	3.0%	15.2%
3	2.0%	5.4%	12.1%	19.5%
4	0%	12.5%	1.1%	13.6%
5	0.5%	5.1%	1.0%	6.6%
6	1.3%	5.8%	10.6%	17.7%
7	1.3%	7.2%	5.7%	14.2%
8	0%	4.9%	0.8%	5.7%
9	0%	12.5%	65.3%	77.8%
10	0%	6.2%	4.7%	10.9%
11	0.7%	9.5%	9.2%	19.4%
12	3.5%	4.2%	15.8%	23.5%
13	0.8%	9.1%	18.9%	28.8%
14	1.5%	20.1%	6.8%	28.4%
15	1.1%	5.7%	3.0%	9.8%
16	2.8%	2.9%	26.7%	32.4%
17	0.9%	7.1%	3.9%	11.9%
18	0.2%	19.7%	1.4%	21.3%
19	0.2%	7.4%	0.4%	8.0%

20	0.4%	8.7%	5.2%	14.3%
21	0.2%	40.6%	5.2%	46.0%
26	2.3%	13.0%	7.5%	22.8%

Watersheds 9,13, 14, 16 and 21 have cumulative impacts tentatively approaching or exceeding 30 percent of the watershed area.

The major impact in Watershed 9 (Jackknife Creek) is a fire that occurred in the watershed more than a decade ago. The watershed is currently mostly stable, though some landslides have occurred in the watershed in the past five5 years. No timber harvesting is scheduled for the next decade within this watershed, but about 13 percent of the watershed could tentatively be scheduled to be treated, primarily for aspen regeneration.

Watershed 13 (Grace) could have about a 29 percent cumulative disturbance. About 9 percent of the watershed could be treated by harvesting or other treatments over the next decade.

Watershed 16 (Blackfoot River) has been impacted by mining, road construction and timber harvesting. Proposed harvesting and vegetation treatments (mostly for aspen regeneration) are expected to impact an additional 5.7 percent of the watershed. Over 32 percent of the watershed could be cumulatively impacted if proposed timber harvesting and other treatments are implemented.

Watershed 21 (Rattlesnake) could have about 46 percent cumulative disturbance. About 41 percent of the watershed area could be treated with fire or other treatments, mostly for aspen regeneration.

Summary

Watersheds 3, 6, 9, 12, 13 and 16 have 10 percent or more of the watershed area that has been impacted by past timber harvesting, mining, roading and fire. These watersheds could be further impacted by proposed timber harvesting and burning in nearly every alternative. Alternatives 1 and& 2 have eight8 watersheds that could have cumulative impacts approach or exceed 30 percent watershed disturbance. Alternatives 3 and& 4 have ten10 watersheds that could approach or exceed 30 percent cumulative disturbance. Alternatives 5, 6 and 7R have five5 watersheds that could approach or exceed 30 percent cumulative disturbance. Alternative Watershed 7 has seven7 watersheds that could exceed 30 percent cumulative disturbance. Delaying, reducing or eliminating proposed activities in these individual watersheds over the next decade would serve to eliminate or reduce cumulative impacts within these watersheds. The following tables summarize the cumulative impacts to all the watersheds within the Forest relative to each other. These impacts are the components needed to assess the issue indicator "*Relative rates to improve watershed geomorphic integrity*.". "Rate,", in this context, is not specifically a time factor (weeks, months, years), but a relationship between alternatives to improve overall watershed values, including geomorphic integrity. The time required to improve a watershed varies greatly by the overall condition of the watershed, the geology, climate, etc.

- *Table B. 51 Summary of Cumulative Effects on Watersheds by Alternative.*

Relative Potential to Protect[1]	**Alt 1**	**Alt 2**	**Alt 3**	**Alt 4**	**Alt 5**	**Alt 6**	**Alt 7**	**Alt 7R**
Timber Harvest	7	6	8	3	2	1	4	5
Livestock Grazing	6	7	8	3	2	1	4	4
Recreation Management	6	6	6	2	4	1	3	5
Watershed Restoration	6	6	8	1	3	2	4	5
Prescribed Burning and other treatments	8	4	6	7	3	2	5	1
Total Points	**33**	**29**	**36**	**16**	**14**	**7**	**20**	**20**
Cumulative	**7**	**6**	**8**	**3**	**2**	**1**	**4**	**4**

1 A rating of "1" has the greatest potential to protect and/or improve watershed functions and associated riparian, water quality and aquatic habitat. A rating of "8"7 has the least potential to protect and/or improve overall watershed values. The ratings are not an order of magnitude (e.g. Alt 3 having 8 times more watershed disturbance than Alt 6), rather simple relative rankings of one Alternative to another.

• *Table B. 52 Existing Conditions within 5th Code Watersheds.*

5thHUC Watershed Number(s) Watershed Name (PWI #)	Watershed Area (W/in Forest Bdry)	IWWI Rating	Stream Condition Miles*	Miles of Per. or Intermit. Streams	Miles of Roads in W/S	Acres of AIZ (2.8.3 Rx)	Miles of Roads in AIZ	Miles of Trails in AIZ	Miles of 303(d) Strms	Acres of Previous Disturb-ance from Mining, Timber Harvest, Fires	% Dis-turbed
1601010205 1601010206 Geneva /01	17,371 4,349	7 6	PFC / 4.5 RL / 7.6 RM / 10.1 RH / 5.0 NF / 0.0	36/26 6/8	35.6 11.7	2,632 476	1.7 0.0	12.3 0.0	8.5 3.8	15 h***** 239 h	1.7%
1601020105 1601020107 Montpelier /02	30,655 482	7 6	PFC / 3.8 RL / 5.4 RM / 21.8 RH / 3.2 NF / 8.7	48/57 0/1	86.8 3.0	3,898 10	26.3 0.0	8.0 0.0		721 h 0	3.0%
1601020104 1601020103 1601020102 1601020101 Georgetown /03	31,698 10,238 15,804 7,957	6 6 6 6	PFC/ 20.9 RL / 7.6 RM / 26.1 RH / 7.0 NF / 0.0	11/99 9/16 15/38 6/28	53.1 32.5 37.5 15.5	2,017 858 1,491 769	16.6 5.8 12.7 4.5	5.0 0.8 4.1 0.6		501 h + 1189 m***** 2478 h 2737 h + 118 m 600 h	12.1%
1601020205 1601020206 1601020207 1601020204 Weston /04	15,488 2,889 6,541 3,419	7 6 7 6	PFC / 5.8 RL / 7.7 RM / 11.3 RH / 11.6 NF / 6.0	26/65 4/15 9/27 3/21	38.2 24.0 12.7 10.9	2,603 474 965 501	11.6 3.3 1.8 3.4	0.7 0.6 1.0 0.9	1.6 2.6	99 h 0 0 0	1.1%
1601020405 1601020408 1601020412 1601020410 1601020411 Malad /05	982 21,564 26,482 9,119 11,544	4 7 7 7 6	PFC / 6.0 RL / 25.9 RM / 26.0 RH / 16.3 NF / 41.3	0/4 22/78 24/110 5/41 24/30	0.8 47.0 49.1 8.8 25.5	52 2,505 2,708 850 2,021	0.1 10.1 8.5 4.7 9.5	0.0 7.1 2.8 3.6 2.3	1.3 5.0	0 0 214 h 0 183 m	1.0%

PFC – Properly Functioning Condition
RL – Functional-at-Risk with a low risk potential
RL – Functional-at-Risk with a moderate risk potential
RH – Functional-at-Risk with a high risk potential
NF – Non-functioning
h – timber harvest including mature overstory removal and regeneration cuts
m – mining activities, primarily phosphate mining
f – fire disturbance

5thHUC Watershed Number(s) Watershed Name (PWI Number)	Water-shed Area (W/in Forest Bdry)	IWWI Water-shed Rating	Stream Condition Miles*	Miles of Perennial or Intermittent Streams	Miles of Roads in W/S	Acres of AIZ (2.8.3 Rx)	Miles of Roads in AIZ	Miles of Trails in AIZ	Miles of 303(d) Streams	Acres of Previous Disturbance from Mining, Timber Harvest and Fires	% of Dis-turb-ed
1704010507 Crow Creek /06	60,838	6	PFC / 9.1 RL / 16.9 RM / 19.7 RH / 25.6 NF / 0.0	96/147	133.5	7,868	27.4	27.1		2757 h + 3368 m	10.6%
1704010508 Stump Cr. /07	48,723	5	PFC/ 8.4 RL / 15.2 RM / 19.5 RH / 42.8 NF / 0.0	78/79	51.8	6,333	13.2	27.5	5.9	167 f + 2642 h + 650 m	5.7%
1704010503 1704010509 1704010501 Tincup Cr. /08	6,551 48,394 16,910	6 6 6	PFC/ 17.0 RL / 7.9 RM / 42.0 RH / 30.4 NF / 8.7	7/13 94/60 19/29	15.1 41.4 19.6	667 7,203 1,695	2.8 15.4 6.6	0.0 10.9 4.4		0 379 0	0.8%
1704010510 1704010500 Jackknife /09	28,183 266	7 5	PFC / 6.0 RL / 12.0 RM / 13.2 RH / 10.6 NF / 4.0	82/27 0/1	24.6 0.8	5,945 8	10.7 0.0	0.0 0.0		6944 f + 11583 h 0	65.3%
1704010411 1704010409 1704010410 McCoy Cr. /10	56,399 937 6	7 5 6	PFC/18.3 RL / 6.9 RM / 30.7 RH / 18.3 NF / 3.1	146/72 0/1 0/0	89.0 1.1 0.0	10,050 17 0	10.7 0.0 0.0	1.2 0.0 0.0		179 f + 2458 h 0 0	4.7%

5thHUC Watershed Number(s) Watershed Name (PWI Number)	Water-shed Area (W/in Forest Bdry)	IWWI Water-shed Rating	Stream Condition Miles*	Miles of Per. or Interm. Streams	Miles of Roads in W/S	Acres of AIZ (2.8.3 Rx)	Miles of Roads in AIZ	Miles of Trails in AIZ	Miles of 303(d) Streams	Acres of Previous Disturbance from Mining, Timber Harvest and Fires	% of Dis-turb-ed
1601020109 1601020108 Bear Lake /11	12,214 25,024	6 6	PFC / 1.4 RL / RM / 8.8 RH / 18.6 NF /	6/22 15/48	31.2 42.3	731 1,657	5.3 9.7	0.1 2.3		947 h 2317 h	9.2%
1601020108 1601020106 1601020103 1601020102 Bear Lake Outlet /12	25,025 34,116 10,237 15,804	6 6 6 6	PFC/ 18.5 RL / RM / 19.8 RH /31.1 NF / 3.1	15/49 25/45 9/16 14/38	41.0 95.8 32.5 37.5	1,657 2,307 859 1,491	9.7 19.9 5.8 12.7	2.4 2.4 0.8 4.2		2318 h 5412 2478 h 2737 h	15.8
1601020212 1601020213 1601020211 Grace /13	2,530 19,344 16,957	7 6 6	PFC / 3.8 RL / RM / RH / 2.2 NF / 0.0	0/10 16/44 0/36	12.2 36.2 37.8	131 1,741 474	0.2 2.1 4.3	0.0 2.9 1.9	 1.5	220 h 4538 h 2391 h	18.9
1704020507 Grays Lake /14	17,661	7	PFC / RL / 5.0 RM / 4.8 RH/ 5.9 NF / 0.0	21/34	31.4	1,947	6.5	0.2		1119 h	6.8
1601020209 1601020206 1601020203 1601020202 Cub River /15	23,170 2,888 35,099 1,511	6 6 6 5	PFC/ 26.1 RL / RM / 7.8 RH / 13.0 NF / 0.2	11/39 5/14 26/71 0/3	36.2 24.0 34.6 0.0	1,302 473 2,721 33	7.1 3.4 16.2 0.0	3.7 0.7 3.6 0.0	0.7 1.5	1260 h 0 379 0	3.0
1704020709 1704020708 1704020711 1704020712 1704020713 1704020710 Blackfoot River /16	177 1,407 46,712 30,389 42,127 2,672	not rated not rated 6 5 6 3	PFC/ 15.2 RL / RM / 22.3 RH / 69.7 NF / 2.0	0/0 0/3 53/106 35/57 11/120 2/6	0.0 3.3 123.0 75.8 118.8 8.1	2 38 4,790 3,079 2,238 221	0.0 0.2 19.1 23.8 18.9 3.0	0.0 0.0 13.4 4.2 4.7 0.0	 18.5 15.5 7.0	0 55 m 4193 f + 6644 h+7127m 5291 h + 298 m 4577 h + 3230 m 551 h + 152 m	26.7
1704020808 1704020809 1704020811 Upper Portneuf East /17	3,643 23,548 22,784	6 6 6	PFC/ 30.1 RL / 3.8 RM / 0.7 RH / 20.2 NF / 0.9	3/10 23/51 34/49	2.9 41.0 44.1	299 2,209 2,795	0.9 14.0 11.3	2.2 0.8 2.0		0 663 h 1087 h	3.9

5thHUC Watershed Number(s) Watershed Name (PWI Number)	Water-shed Area (W/in Forest Bdry)	IWWI Water-shed Rating	Stream Condition Miles*	Miles of Perennial or Intermittent Streams	Miles of Roads in W/S	Acres of AIZ (2.8.3 Rx)	Miles of Roads in AIZ	Miles of Trails in AIZ	Miles of 303(d) Streams	Acres of Previous Disturbance from Mining, Timber Harvest and Fires	% of Dis-turb-ed
1704020804 1704020803 1704020606 Upper Portneuf West /18	10,870 6,682 410	6 6 not rated	PFC/ 11.3 RL / 5.0 RM / 6.7 RH / 10.3 NF / 2.0	10/22 8/12 0/1	7.5 5.3 0.0	968 720 25	1.8 1.9 0.0	3.3 1.6 0.0	0.2	142 h 74 h 0	1.4
1704020805 1704020804 1704020807 Marsh Cr. /19	4,494 10,871 32,815	5 6 7	PFC/ 19.6 RL / 2.5 RM / 13.4 RH / 11.8 NF / 2.2	2/10 9/23 31/110	3.2 7.5 65.3	255 968 3,564	0.1 1.9 16.3	0.0 3.4 8.6	0.4 1.5	18 h 0 13 m	0.4
1704020802 1704020803 1704020801 Lower Portneuf /20	31,215 6,682 2,912	6 6 6	PFC/ 29.7 RL / RM / 12.3 RH / 3.1 NF / 3.2	33/81 8/12 4/10	64.4 5.2 12.7	3,122 720 387	20.2 1.8 2.3	4.6 1.6 0.0		1912 h 0 0	5.2
1704020621 1704020620 Rattlesnake /21	5,700 3,029	6 6	PFC / 2.7 RL / RM / 3.4 RH / 7.1 NF / 0.0	5/9 3/8	8.0 10.5	430 329	1.9 1.0	3.0 0.0		421 h 0	5.2
1601020303 Logan River /26	27,344	5	PFC/ 11.9 RL / RM / RH / 0.7 NF / 0.0	22/38	34.6	1,853	12.3	1.9		1977 h	7.5

- *Table B. 53 Proposed Timber Harvesting by 5th Code Watersheds by Alternative Within the 5.x Prescription Areas.*

5thHUC Watershed Number(s)	Watershed Name /PWI number	Alt 1 Timber Harvest Rx (5.x) (Acres)*	Alt 2 Timber Harvest Rx (5.x) (Acres)	Alt 3 Timber Harvest Rx (5.x) (Acres)	Alt 4 Timber Harvest Rx (5.x) (Acres)	Alt 5 Timber Harvest Rx (5.x) (Acres)	Alt 6 Timber Harvest Rx (5.x) (Acres)	Alt 7 Timber Harvest Rx (5.x) (Acres)	Alt 7R Timber Harvest Rx (5X) (Acres)
1601010205	Geneva				4				
1601010206	/01			1,431					
1601020105	Montpelier	5,254	5,254	5,254	2,022	2,528		2,467	3582
1601020107	/02								
1601020104	Georgetown	4,118	4,125	4,118	3,777	1,128	4,612	2,849	4320
1601020103	/03	7,099	6,484	6,505	1,363	1,904	1,362	1,606	7892
1601020102		9,363	9,213	9,213	9,271	4,321	4,231	3,904	17246
1601020101		3,434	2,868	3,131	1,473	1,474	1,003	1,003	3483
16010	Weston			68					
1601020206	/04								
1601020207				77					
1601020204									
1601020405	Malad								
1601020408	/05								
1601020412		2,434	1,612	5,371		1,603	1,819	1,163	4289
1601020410				5,300					
1601020411				5,296			26		
1704010507	Crow Creek /06	12,344	12,341	18,470	5,207	5,060	4,200	6,669	10649
1704010508	Stump Cr. /07	19,543	19,549	19,543	5,219	5,234	2,538	4,137	8248
1704010503	Tincup Cr.	24	24	24				24	
1704010509	/08					1,358	2,567		
1704010501		4,151	3,456	3,456	162			1,824	
1704010510	Jackknife								
1704010500	/09								
1704010411	McCoy Cr.	1,649	1,649	1,649				2,903	
1704010409	/10							90	
1704010410									
1601020109	Bear Lake	4,599	4,599	4,599	3,266	3,266	3,266	2,937	2497
1601020108	/11	4,646	4,617	14,820	1,685	1,631	1,892	1,529	
1601020108	Bear Lake	4,646	4,617	14,821	1,686	1,631	1,892	1,529	6634
1601020106	Outlet	21,823	21,803	26,186	20,355	15,282	13,397	15,397	19088
1601020103	/12	7,100	6,484	6,505	1,363	1,905	1,362	1,606	
1601020102		9,363	9,213	9,213	9,271	4,622	4,231	3,905	
1601020212	Grace								
1601020213	/13	3,666	1,349	3,150	1,952	1,952	1,938	1,197	2702
1601020211		5,398	4,011	9,067	27	25	634	2,089	7932
1704020507	Grays Lake /14	2,395	2,128	2,800	3,263	6195	2,914	2,187	3580
1601020209	Cub River	4,749	4,749	6,411	2,173	1,359		1,408	1888
1601020206	/15								
1601020203		2,177	2,177	2,428	589	590	588	665	809
1601020202									
1704020709	Blackfoot				92	92			
1704020708	River	141	29	438	534	534		33	
1704020711	/16	21,165	12,334	25,322	14,892	11,287	900	9,458	9541
1704020712		21,641	21,443	23,771	11,359	10,627	11,460	9,585	14093
1704020713		26,360	26,466	29,911	7,303	5,976	10,744	7,111	24753
1704020710		1,676	1,016	1,994	1,969	1,969	1,635	1,409	1635

5thHUC Watershed Number(s)	Watershed Name /PWI number	Alt 1 Timber Harvest Rx (5.x) (Acres)*	Alt 2 Timber Harvest Rx (5.x) (Acres)	Alt 3 Timber Harvest Rx (5.x) (Acres)	Alt 4 Timber Harvest Rx (5.x) (Acres)	Alt 5 Timber Harvest Rx (5.x) (Acres)	Alt 6 Timber Harvest Rx (5.x) (Acres)	Alt 7 Timber Harvest Rx (5.x) (Acres)	Alt 7R Timber Harvest Rx (5X) (Acres)
1704020808 1704020809 1704020811	Upper Portneuf East /17	 3,915 7,589	 3,915 7,589	 3,915 7,589	 370 4,246	 3,886	 3,886	 618 3,660	 1558 4111
1704020804 1704020803 1704020606	Upper Portneuf West /18			1,630					
1704020805 1704020804 1704020807	Marsh Cr. /19	1 776	1 628	1 5,163	22	 120	23 940	1	
1704020802 1704020803 1704020801	Lower Portneuf /20	3,123 1,540	3,121 1,540	3,171 1,540	9,834 3	 77	7,454 77 362	2,028 147	2487 385
1704020621 1704020620	Rattlesnake /21	851	851	2,186	514	531 1,609		38	959
1601020303	Logan River /26	12,617	12,617	13,184	5,595	5,595	5,594	5,968	8171

* From Forest's Timber Forester

Note: PWI watershed boundaries may split several 5th code watersheds. Those watersheds that occupy one or more PWI watersheds are highlighted with color codes to show which watersheds have been split. Like colors denote common watersheds. (Example: Watershed 1704020804 is within PWI watershed 18 and 19 and both are shown in red)

RIPARIAN

See Chapters 3 and 4.

WATER QUALITY

See Chapters 3 and 4.

Issue 7

Timber Program

The information for the Timber Program analysis was derived from the VDDT model described in Issue 3—Forested Vegetation. See that section for more detailed information.

Available and Capable Timberlands

TIMBER SUITABILITY

This document is an addendum to an earlier document **"Technological Building Blocks for Deriving Timberland Suitability Answers"** written in 1996 by Kimberly C. Mayeski and Faye Krueger. The 1996 document addresses both programmatic direction for deriving timberland suitability and some of the GIS strategies used in the 1996 suitability run. In 2000, with Forest Plan Revision officially underway a new effort was undertaken to map suitable acres. Many updates/changes had been made to the GIS layers used in 1996 and a new run was warranted. While the programmatic direction has not changed since 1996, some of the GIS aspects are handled differently. This document addresses the GIS strategies that were used in the 2000 suitability run. NOTE: While the term "suitable for timber" is often used in both documents it is actually referring to "***tentatively*** suitable for timber." GIS is used to produce numbers for planning purposes but the real test for timber suitability is on the ground.

Between 1996 when the first inventory was completed and 2000 when the suitability was calculated for the Forest Plan Revision many strides were made in the technical capabilities of GIS on the Caribou with IBM personal computers and peripheral equipment that allowed for more file storage, larger GIS files, and faster processing speeds. While in 1996 ArcInfo work was done under the Grid program because of system processing limitations, in 1999-2000 ArcInfo system capabilities were much greater, processing was much simpler through Arc and Arcview was a very useful tool for both analysis and the creation of display maps.

Significant changes were made to several of the GIS layers used in the timberland suitability model. The layers (themes) used and the updates/changes made are addressed later in this document under the "**Background…..**" section.

PROGRAMMATIC DIRECTION – GIS THOUGHTS

While each acre on the Forest must meet a myriad of conditions in order to be considered suitable for timber, the sequence in which the conditions are applied can affect the usability of intermediate map products generated along the Stage 1 - Stage 4 process described in the Mayeski/Krueger document. To take the list in Table 1, Section 1 of the document, replicated below, Sseveral of the items listed are directly tied to what would be a cover type layer, while other items represent administrative decisions in regard to physical area (regardless of cover type), and others are corridor buffers applied in an attempt to account for linear features that are difficult to capture when working on a broad-scale analysis. The letters in brackets (**[a] [b] [c]**) within Section 1 represent how the themes of similar nature might be grouped in GIS. The paragraphs below the table explain some of the reasons behind the groupings.

Table B. 54 Land Classification List (NFMA Regulations)

Section	Type	Layer
Section 1 [a]	Non-Forest land (includes water)	Rangeland
[b]		Administrative Sites
[c]		Improved Roads
[c]		Utilities
[b]		Private land
[a]		Mines
[a]		Standing Bodies of Water
[c]		Streams
Section 2	Land Withdrawn from Timber Production	Wilderness
		Research Natural Areas
Section 3	Land Not Capable of Producing Crops of Industrial Wood	Rocky or talus
		Low productivity sites
Section 4	Land Physically Unsuitable	Unstable soils
		Land types not restockable within five years
		Slopes 65% and greater

The following section further defines the columns in the table above.

SECTION 1[a].

Of the layers listed in Table 1, Section 1, those that can be taken directly from the Caribou's covertype layer are:

Rangeland (whether the ground is forested or not).
Mines (actual disturbed areas).
Standing bodies of water.

The Caribou's primary cover-type layer came from the satellite image classification conducted in 1995-1996 on 1991 vintage satellite data. This classification, combined with updates/changes from work with District personnel in 1999-2000, adding the layer for standing water, and taking into account ground-disturbing activities such as mining, harvest, and wildfires, became the layer from which timber suitability was run. How the ground-disturbing activities were incorporated into the cover layer is addressed later in this document.

SECTION 1[b].

Those items that are a result of administrative controls are:

Administrative sites.
Private land.

These two layers have littlereally have nothing to do with the cover types that are on the ground, but with the level of control exercised and the kind of activity that the Agency allows. Administrative sites are areas that we, as an Agency, have agreed not to manage for timber, not that they do not have timber on them, but these are "withdrawn" and are considered taken out of the suitable timber base. Private lands (includes private and State inholdings and patented mining claims) within the Forest Boundary are also excluded from the suitable timber base, not that there is no timber on these lands but the Agency has no authority to manage them for timber.

SECTION 1[c].

Those items that are an attempt to account for detailed features:

Improved roads (constructed roads).
Utility corridors.
Streams.

This third set of items (Streams) is buffered in GIS, because they are generally addressed as line features on most maps while they do take up physical space on the ground. On the ground they really are long, narrow polygons. Improved roads and utility corridors are generally cleared pathways, long narrow polygons through native vegetation (timber/brush/grass). Overhead utility corridors are generally cleared pathways similar to roads but native vegetation is often allowed to grow back, except for timber. Timber would probably be allowed to grow back over buried utility lines but the degree of surface disturbance allowed over buried utility lines would not permit timber harvest, therefore these lands are considered not suitable for timber. Perennial and intermittent streams are also treated as line features in GIS but on the ground they really are long narrow polygons across unaltered native vegetation. Perennial streams are generally wider than intermittent ones and would be given a wider buffer.

Forest-wide average widths are used in GIS in the buffering process to convert the road, utility, and streamline coverages into polygons. Buffer widths used for each theme are shown on the flowchart on page 7. The area occupied by the buffers is considered to be removed from actual resource production and is not "suitable" for timber management.

SECTION 2.

Under Section 2 the two layers listed, Wilderness and Research Natural Areas (RNAs), are a result of administrative decisions. For the Forest at this time there is no officially designated Wilderness, only the two areas proposed for Wilderness in the 1985 LRMP. These two proposed wilderness areas will not be factored into the timber suitability equation at this point but can be taken out later should there be Legislative action that makes them officially designated Wilderness. The RNAs, however, have been officially designated and these acres will be removed from timber suitability.

SECTIONS 3 and 4.

Under Sections 3 and 4 the layers listed would remove acres from timber suitability. These layers focus on the capability of the soils to produce industrial wood, that reforestation cannot be assured or that topographic factors are present under which irreversible resource damage might occur under a harvest scenario.

BACKGROUND ON THE INDIVIDUAL LAYERS

Many of the individual layers used in the timber suitability run were actually created as part of the Forest's general GIS library or "corporate" data. Most of these layers have uses beyond timber suitability. Many of them continue to evolve as updates and/or changes are warranted over time. Several of the layers were used in the 1996 suitability run but have since been modified (cover types, soils), others were created from newer Cartographic Feature Files (CFFs) obtained in 1999. The mine, harvest, and wildfire themes incorporated into the cover type layer were created/updated during the winter of 1999-2000, just prior to the suitability run.

Vegetation [cover types] layer

This base layer is often referred to as a "veg" layer when in fact there are many areas on the Forest that are not vegetated; rock and water are two examples. These are not vegetation types *per se* but cover physical areas and are cover types that would not be suitable for timber. Rock was already a component of the "veg" layer; water bodies over one acre in size were incorporated in February, 2000.

During the summer of 1999 additional review of the 1996 vegetation layer took place with District personnel in order to fine-tune vegetative classes on the GIS layer. In general, broad areas were reviewed for local accuracy with some

attempt to isolate minor vegetative components such as willow/riparian, pure sagebrush, and tall forb communities. Results were marginal. In general, these communities were not easily identified on the vegetative layer, that they were not separate polygons. These vegetation types were most often blended in with other types, although usually not with forested types.

Additional updates were made to the harvest unit layer to bring it up to current before it was incorporated into the cover type layer. Several other disturbance regimes were also taken into account on the cover type layer in order to address timber suitability, whether or not the acres actually have trees on them.

Natural and man-caused disturbances such as wildfire and mining were brought into play. In the case of wildfires, two wildfires were digitized; the Tincup Fire from 1994 and the Trail Creek fire from 1988. For the Trail Creek Fire, which occurred before the satellite image was taken, Forest Service personnel used aerial photos to determine what the cover type was before it burned in 1988 and compared it to what appeared to be on the satellite image of 1991. Some suitable timber acres that had been converted to short-term non-forest types, but which would eventually return to timber, were classified as suitable for timber even though they do not currently have a forested canopy. Seral stage on these acres would be early.

For the Tincup Fire, which occurred in 1994, the types on the cover type layer, which might have been a timber type before the fire and a timber type after the fire, might have changed from mid- or late-seral to early-seral. In this case suitability for timber would not have changed but seral stage of timber would have, and it was important to capture this here as it would not be accounted for on other thematic layers. In the case of other disturbances such as surface mining where there would be a long term conversion of timber into non-forest types, the cover type was changed to rock or other non-timber types on open areas. These acres were classified as unsuitable for timber management.

For purposes of timber suitability, the following cover types were combined to represent the conifer cover class:

DF (Douglas-fir)
LP (lodgepole pine)
mixcon1 (DF, LP, AF (subalpine fir))
mixcon2 (S (Englemann Spruce), AF).

The aspen and aspen/conifer classes were by themselves. All other cover types (mountain mahogany, juniper, maple, aspen/maple, riparian, sagebrush, mountain brush, rock and water) were classified as not suitable for timber management.

Improved roads

A more recent CFF (Cartographic feature file) layer was used for the roads layer. Those features coded as improved roads, secondary highways or above were buffered 30 feet on each side of the road. Thirty feet was determined to be an average width forest-wide. This buffer included the road profile itself and the adjacent borrow pit. Note: While the travel plan/roads inventory was underway on the Forest at the time, and since it was months from completion, it was not used in this timber suitability analysis.

Utilities

A more recent CFF layer was used for the utilities layer. In addition, some features that had been overlooked in the past were digitized from the land status maps. Utility lines were buffered 30 feet on each side of the line.

Land ownership

A more recent CFF layer was used for land ownership. In addition, many land exchanges that had occurred since 1996 were incorporated into the new theme.

Mining activity

Steve Robison and Anita Lusty reviewed and updated the mines layer. These changes were incorporated into GIS and used in the timber suitability analysis. See also the last sentence under the vegetation section above. Additionally, mining disturbance was mapped across all lands within the Forest boundary and was incorporated into the Forest-wide cover type layer.

During formulation of Alternatives 1-7 in Feb 2001, the decision was made to use the 2000 version of phosphate mine perimeters within the alternatives. The 1999 version had been used during the initial suitability run. Incorporating the 2000 version into the alternatives changed the effect of timber suitability as now there where suitable timber acres that had been mined and would no longer be suitable. This changed suitable acres from how they were originally calculated and as they are shown within this document.

Standing water

A more recent CFF layer was used for water bodies (lakes, ponds, reservoirs). Polygons greater than 1 acre in size were incorporated into the covertypes layer. Standing water polygons were buffered 30 feet on the exterior for purposes of timber suitability.

Streams

A more recent CFF layer was used for streams. In addition, several quads on the north end of the Bear River Range where nearly every stream was labeled "perennial," were corrected by Brad Transtrum before the suitability analysis was run. Per Lee Leffert, Forest Hydrologist, the areas immediately adjacent to the streams are considered to be sensitive streamside zones that are not appropriate for growing/ harvesting trees. Perennial streams and other perennial water bodies were buffered 30 feet on each side of the line. Intermittent streams were buffered 15 feet on each side. The areas inside the buffers were considered not suitable for timber management.

A second situation that arose that caused suitable timber acreage to be different than the way it was portrayed previously in this document concerns AIZs or Aquatic Influence Zones. Originally a 30-foot buffer (each side, perennial and intermittent) was used along streams to take streamside zones out of the suitable base. This width was changed to 150 feet for perennial water and 50 feet for intermittent. This change did not happen until the end of the analysis, and the effects are not incorporated into the timber suitability as it is described previously in this document.

The AIZ layer used (buffers 150 feet on perennial, 50 feet on intermittent) is **cnf_aiz_feb21** in the same directory.

Research Natural Areas

Digitized in 1996, these were verified against the official files and updated as necessary. RNAs are considered not suitable for timber management.

Soils

The Caribou's Forest-wide soils layer which was used to derive several of the themes in the suitability run had been digitized in 1996 and edge-matched against the Forest Boundary and private inholdings in 1999. Source maps were from a 1:24,000 order 3 correlated soils survey which was done in the early 1970's . Attribute information for the landtypes was put into a table on which the themes were based. This table, ***soils_suittimb.dbf*** is located in the working directory ***/fsfiles/office/gis/cnf_plan/ suit_timb/cnf*** . The themes for low productivity, unstockability (includes where irreversible resource damage might occur), and instability were all produced from the soils theme. In addition, many landtypes were classified as being suitable for timber management only with mitigation. This information is also in the soils table.

Slopes Greater than > 65 Percent

Slope maps were produced from a new set of Digital Elevation Model (DEM) files obtained in 1999. Maps were produced showing slopes over 65 percent and a second set of maps show areas where slopes are greater than 45 percent. Slopes over 65 percent are considered not suitable for timber management. Slopes between 45 percent and 65 percent may be suitable with mitigation.

RUNNING THE SUITABILITY "MODEL"

In preparing to run the timber suitability "model" in GIS each of the above layers was created separately. The Forest-wide layers were split into different physical areas (directories /***sod*** – for Soda Springs RD, includes the Pruess portion of Montpelier RD, /***mon*** –for Montpelier RD, actually only the Bear River or Cache Range, /***poc*** – for the two Pocatello RD polygons, /***mal*** - for the two Malad RD polygons, no Curlew) under the ***/fsfiles/office/gis/cnf_plan/suit_timb*** directory. Source coverages, buffer coverages, dissolved coverages are all located in these directories. This was done to document the coverages that were current at the time the suitability run was made. The originals, located in other directories, may undergo updates and/or changes over time but the coverages in the ***/suit_timb*** directory were the most current versions when the timber suitability model was run.

The suitability "model" that was run was not a self-contained, executable program but a series of unions/intersects/dissolves in ArcInfo and some attribute table work in ArcView. The beginning theme was the covertype theme. Three classes of vegetation were considered suitable for timber, aspen, conifer, and aspen/conifer. Subsequent themes applied acted as filters, these may or may not have taken out additional acres. Once all of the filters were applied the remaining acres were considered "tentatively suitable for timber." Periodic checks were made with review by resource specialists to verify that results were coming out as expected, that polygons were being classified correctly. For further explanation of this process, see the Project File, GIS Documentation, Timber Suitability.

The final step in creation of the suitable timber layer for the Caribou involved dealing with the isolated stands of aspen and/or conifer less than ten acres in size. These isolated areas may not be economical to harvest in the event that road building is necessary for access to them. As there are three different suitable timber types (conifer, aspen/conifer, and aspen) still on the GIS layer at this point, individual polygons of suitable timber might be less than ten acres in size but if a three-acre polygon of conifer is adjacent to an eight-acre polygon of aspen, while individually the polygons are each less than ten acres in size, because they are both suitable types and adjacent to each other, added together at eleven acres the ground would still be suitable.

This concept of adjacent suitable polygons was portrayed in GIS by first dissolving the three suitable cover types (aspen, conifer, and aspen/conifer) into one, selecting and eliminating the suitable polygons that are still less than ten10 acres, then converting the map back to the original three3 suitable cover types. This being done, the result was a net loss of approximately 4,600 polygons and 4,800 acres of isolated, otherwise "suitable" ground. Acreage results are in Table B.55, below. Should the desired minimum polygon size change, this portion of the process can be run again using the new size limit.

During the course of the filtering process many of the harvested acres may have been dropped out of the "tentatively suitable" timber base. This was because they happened to fall within the bounds of one of the filters that were applied. Upon investigation most of these harvested areas were dropped out due to soils. In general the landtype polygons are large blocks, several hundred acres in size and are considered to be often times comprised of several different soil types that individually might be found to be unsuitable for timber management even though they might have small inclusions that would be classified as suitable. In preparation for timber harvest, resource specialists determine through on-the-ground inspection before timber sale activities begin that the areas within the boundaries of the harvest units are actually suitable for timber management. At the end of the timber suitability run the harvested polygons that had been dropped out through the filtering process were added back into the suitable timber base. This was the final step in running the suitability model. The net effect of the applying the minimum stand size is shown in the table below. The last column also includes the effect of adding the harvest units back into the suitable base.

• *Table B. 55 Results of filtering process for suitability.*

Cover class	Acres Originally "Forested"	Acres after filters were applied	Acres after applying 10- acre minimum and adding harvest units back in
Aspen	152,309	79,491	78,433
Conifer	282,747	168,533	176,449
Aspen/conifer	115,737	54,123	52,345
TOTALS "suitable"	550,793	302,147	307,227
Not suitable For timber	491,298	739,944	734,864

At the end of the process a separate hard copy map was produced to document the individual themes. Postscript files are located in a directory called /fsfiles/office/gis/cnf_plan/suit_timb/maps. As so often happens in GIS processing, sometimes changes are made or mistakes are found that result in reworking through a series of steps several times before a final product is produced. Such was the case here. Water buffers were changed after the first run and several landtypes were changed. Some of these were found to be incorrectly labeled in the attribute table. Harvest units had not been added back in to the suitable base. Reworking through the steps in the Flowchart was necessary to fix the problems that were encountered. All the GIS steps taken the final output is cnf_layer4add in the working directory /fsfiles/office/gis/cnf_plan/suit_timb/cnf.

Overall, these processes are GIS processes used to produce numbers for planning purposes. Much relies on the accuracy of the vegetation/covert type map that was produced from satellite imagery and on the scale and accuracy of the other GIS layers that were used along the way. GIS can only produces maps and figures for "tentatively suitable" ground and usually only on a broad scale. Resource specialists reviewed the GIS layers to verify the results; these will be further verified in site-specific analysis.

The Project File contains several additional documents containing further documentation of the mapping process. They include: list of files, additional notes on files, and examples of ArcInfo *log* file.

The final GIS coverage for suitable timber is cnf_tsuite_f22 in /fsfiles/office/gis/cnf_plan/suit_timb/cnf.

ESTIMATION OF TIMBER VOLUME

Timber volume information is needed in the Forest Planning process to determine Long Term Sustained Yield Capacity (LTSYC) and Allowable Sale Quantity (ASQ) by alternative. To get the volume information, we used the yield table set developed during the Targhee National Forest Plan Revision process by the Forest Vegetation Simulator Model. The Targhee and Caribou National Forests use the same variant of the model (Teton). The Forests also share similar habitat types and productivity ranges, therefore, the model should produce a similar range of yield results for each Forest, by species.

Each cover type in the VDDT (Vegetation Dynamics Development Tool) model has a successional pathway which includes a series of natural and human-caused disturbances (fire, harvest etc.). The occurrence of harvest disturbances in the model is based on silviculture prescriptions by species. To produce our volume information, I used the timeframe a harvest occurred in a given silviculture prescription, as portrayed in the successional pathway diagrams/charts, and read the volume/acre figure from the species-specific yield table for that timeframe (See also Process Paper BP2 in the Project File). A yield/acre was assigned to each management prescription for each harvest treatment entry; there were no reductions in ASQ yield made for different management prescriptions (See also Project File:

VolumeYieldFLMP.xls). For example, a suitable acre in a recreation emphasis alternative yields the same volume as an acre in the commodity emphasis alternative, for a given harvest treatment entry. This figure is then entered into the VDDT model by opening the "mega" model (Caribou_xx.proj), selecting "Edit Values by Attribute" and entering ccf volume/ac. under the "Inv_oth_aspen" and "Inv_oth_conifer" columns for Management Prescriptions #2, 3, 4 and 6 and "Inv_suit_conifer" for Management Prescription #5. When this data is processed with an alternative run through the model database and spreadsheet, the LTSY and ASQ values are produced. The number of acres in a given management prescription is the major determinant in arriving at the ASQ and LTSY for a particular alternative. An alternative with an emphasis on recreation has fewer acres suitable for timber harvest than an alternative with a commodity emphasis, therefore a smaller ASQ.

Documentation for each volume/acre harvest entry to the VDDT model is found in a two-page spreadsheet in the EM drawer under Caribou Res., Car_timber, 1950, Forest Plan Revision, titled Volume Yield FLMP.xls. A copy of the spreadsheet is attached. Additional information on each silvicultural treatment is found in the individual Forest Vegetation Simulator runs for the specific treatment. This includes projection information on species, density, diameter, age, height and growth for pre and post treatment stands.

LIMITS

Limits, in a modeling sense, are used to represent physical, ecological, financial, legal, or social thresholds that simulation must fall within in order to be considered reasonable or appropriate. For example, budgetary requirements to implement an alternative must be within reason compared to historic levels and Desired Future Conditions attainment must comply with other resource management objectives consistent with a given alternative. Models of alternatives had to satisfy numerous types of limits in order to be feasible. The most common limits applied was for acres treated in any given time period.

ESTIMATION OF BUDGET FOR MANAGEMENT ACTIVITIES

Each alternative had a budget objective for management actions that adjust the structure of forested vegetation. Budget limits were for mechanical and fire activities and varied by alternative and are displayed in Table B-9 in thousands of dollars annually. Budget expenditures for FY1998 for timber management activities (reforestation, thinning, harvesting) and fuel reduction activities (prescribed fire) were used to generate the budget limits (TSPIRS, 1999). These budget levels did influence the attainment of DFC and outcomes such as acres of prescribed fire and mechanical treatments.

Budgets received for management activities can have an effect on achievement of DFCs. Budgetary costs in the VDDT model are for management actions that change the forested vegetation. Other budget information from activities such as recreation, wildlife restoration, riparian restoration and others is discussed in Chapter 3.

Alternatives that have large differences in the objective function from the baseline model indicate that constraints (including budget) are having major effects. Alternatives that differ little in the objective function from the baseline model indicate that management direction in the form of MPCs is having the most effect on achieving DFCs of the forested vegetation.

During the Plan Revision process budgets were constrained to be reflective of historical levels or anticipated levels if activity levels were substantially increased. Other outcomes from the model may provide information for evaluating the differences between the alternatives and were used in the effects analysis. Table B-56 displays the budget level for each alternative along with other outcomes for the first decade, which provide information for alternative evaluations.

• *Table B. 56. Budget Levels by Alternative and Other Outcomes*

Caribou National Forest		Alt. 1	Alt. 2	Alt. 3	Alt. 4	Alt. 5	Alt.6	Alt.7	Alt 7R
Budget for Treatments of Forested Vegetation	$/yr	$1,207M	$2,652M	$3,166M	$4,815M	$2,168M	$2,151884 M	$2,884M600	$2,600884M
Created Openings	Ac/yr	770	720	850	410	390	2450	450640	640450
Mechanical Harvest	Ac/yr	1680	1670	2190	710	650	490730	7301631	1,635730

ESTIMATION OF ALLOWABLE SALE QUANTITY (ASQ)

The sustainable level of timber harvest volume from suited acres is referred to as ASQ and the National Forest Management Act requires estimation of this outcome. Suited acres are defined by MPC and were discussed above.

Estimates of the timber volume generated from mechanical treatments on suited acres were included in the VDDT model to estimate ASQ. Yield estimates for the activities within Management Actions, discussed above, were the basis for determining ASQ. The objective of non-declining flow was included in all alternatives. Table B.57 displays the model-generated portion of the Allowable Sale Quantity as calculated by VDDT.

- *Table B. 57 ASQ Acres - Vegetation Management Practices Annual Estimated Harvest Acres in 1st Decade from Suitable Lands.*

	Alt 1	Alt 2	Alt 3	Alt 4	Alt 5	Alt 6	Alt 7	Alt7R
REGENERATION HARVEST	**Acres**	**Acres**	**Acres**	**Acres**	**Acres**	**Acres**	**Acres**	**Acres**
A. Clearcut								
With and without reserve leave trees	1,010	820	1,170	340	330	210	380	230
B. Shelterwood and Seed Tree								
Preparatory Cut	110	160	170	60	60	40	40	180
Seed Cut	370	360	470	170	140	180	170	40
Removal Cut								
Selection	10	10	10	30	20	10	20	50
INTERMEDIATE HARVEST								
Commercial Thinning	20	30	30	20	20	10	20	40
Salvage/Sanitation	50	50	50	40	40	40	50	70
TOTAL ASQ ACRES	**1,570**	**1,430**	**1,900**	**660**	**610**	**490**	**680**	**610**
TIMBER STAND IMPROVEMENT	310	280	370	130	120	100	130	360
REFORESTATION[1]	550	500	650	230	210	170	230	280

1 Includes natural and artificial.

- *Table B. 58 ASQ Volume - Summary of Allowable Sale QuantityAnnual Estimated Harvest Volume (CCF) in 1st Decade*

	Alt 1	Alt 2	Alt 3	Alt 4	Alt 5	Alt 6	Alt 7	Alt7R
REGENERATION HARVEST	**CCF**	**CCF**	**CCF**	**CCF**	**CCF**	**CCF**	**CCF**	**CCF**
A. Clearcut								
With and without reserve leave trees	7,900	6,660	7,930	1,910	1,910	1,450	2,050	1,890
B. Shelterwood and Seed Tree								
Preparatory Cut	720	1,140	1,150	320	320	280	360	1,690
Seed Cut	1,580	1,580	2,300	1,030	1,030	1,100	1,100	310
Removal Cut								
Selection	30	30	40	80	80	40	80	480
INTERMEDIATE HARVEST								
Commercial Thinning	70	90	80	60	60	30	60	330
Salvage/Sanitation	300	300	300	100	100	100	300	500
TOTAL ASQ VOLUME	**10,600**	**9,800**	**11,800**	**3,500**	**3,500**	**3,000**	**3,700**	**5,200**

Approximately 100 CCF of the commercial thinning and salvage/sanitation ASQ volume will be non-sawtimber post/pole and commercial firewood harvest.

The sustainable level of timber harvest volume from suited acres is referred to as ASQ and the National Forest Management Act requires an estimation of this outcome. Suited acres are defined by MPC and were discussed above.

Each alternative proposes a level of timber harvest, primarily tied to the amount of acres suitable for timber harvest acres in that alternative. Successional stages in each cover class on suitable lands were treated with silvicuture prescriptions. The resulting harvest volume is the Allowable Sale Quantity (ASQ) for that alternative. The Total Sale Program Quantity (TSPQ) includes the ASQ, firewood harvest from suitable lands, plus timber harvest on unsuitable lands. See Chapter 4, Timber Sale Program section of the EIS, for additional discussion on the ASQ and TSPQ.

ESTIMATION OF TOTAL SALE PROGRAM QUANTITY (TSPQ)

The level of timber harvest volume from forested acres is referred to as Total Sale Program Quantity and the National Forest Management Act requires estimation of this outcome. This total volume amount includes the ASQ.

Estimates of the timber volume generated from mechanical treatments on forested acres were included in the VDDT model to estimate the modeling portion of Total Sale Program Quantity (TSPQ). Yield estimates for the activities within Management Actions, discussed above, were the basis for determining the modeled portion of TSPQ. Table B.59 displays the model-generated portion of Total Sale Program Quantity by Alternative for the Forest as calculated by VDDT. Additional volume estimates from salvage, post and poles, and firewood were added to the model estimates to determine the final amount of Total Sale Program Quantity in the Forest Plans.

- *Table B. 59 Summary of Total Sale Program Quantity Annual Estimated Harvest Acres from Suitable and Unsuitable Lands for 1st Decade*

	Alt 1	Alt 2	Alt 3	Alt 4	Alt 5	Alt 6	Alt 7	Alt7R
REGENERATION HARVEST	**Acres**	**Acres**	**Acres**	**Acres**	**Acres**	**Acres**	**Acres**	**Acres**
A. Clearcut								
With and without reserve leave trees	1,010	820	1,170	340	330	210	380	460
B. Shelterwood and Seed Tree								
Preparatory Cut	200	370	430	80	70	40	40	450
Seed Cut	370	360	490	170	140	180	180	40
Removal Cut								
Selection	10	10	30	20	10	20	50	50
INTERMEDIATE HARVEST								
Commercial Thinning	20	30	30	20	20	10	20	40
Salvage/Sanitation	50	50	50	40	40	40	50	70
TOTAL TSPQ ACRES	**1,680**	**1,670**	**2,190**	**710**	**650**	**495**	**700**	**1,100**

- *Table B. 60 Summary of Total Sale Program QuantityAnnual Estimated Harvest Volume (CCF) for 1st Decade*

	Alt 1	Alt 2	Alt 3	Alt 4	Alt 5	Alt 6	Alt 7	Alt7R
REGENERATION HARVEST	**CCF**	**CCF**	**CCF**	**CCF**	**CCF**	**CCF**	**CCF**	**CCF**
A. Clearcut								
With and without reserve leave trees	8,050	6,910	8,130	2,080	2,080	1,450	2,050	3,780
B. Shelterwood and Seed Tree								
Preparatory Cut	1,310	1,500	2,890	430	370	280	360	2,530
Seed Cut	370	360	470	170	140	180	170	310
Removal Cut								
Selection	10	10	10	30	20	10	20	480
INTERMEDIATE HARVEST								
Commercial Thinning	20	30	30	20	20	10	20	330
Salvage/Sanitation	4,840	4,890	4,570	1,870	1,970	1,930	2,280	2,270
TOTAL TSPQ VOLUME	**14,600**	**13,700**	**16,100**	**4,600**	**4,600**	**4,000**	**4,900**	**9,700**

TSPQ salvage volume includes estimated total sawtimber salvage and personal use firewood harvest from all lands.

In the first decade, Alternatives 1-3 emphasize clearcutting in the mixed conifer type and shelterwood seed step harvest in Douglas -fir, focusing primarily on ASQ volume on suitable lands, including roadless areas. Harvest on unsuitable lands, i.e. those with prescription emphasis other than timber harvest, is limited preparatory shelterwood harvests in conifer and a minor amount of clearcutting in aspen. Alternatives 4-7, with RACI constraints restricting harvest in roadless areas, have a similar but reduced harvest emphasis, with Alternatives 6 and 5 having the lowest harvest level.

Unsuitable land harvest is minor with none in Alternatives 6. Alternative 7R has a reduced emphasis on clearcutting in mixed conifer types on suitable lands, but an increased emphasis on preparatory shelterwood harvests. In mixed conifer and Douglas fir, the prepartatory shelterwood treatments are designed to select and leave younger, healthy mature Douglas fir and lodgepole pine for future seed trees. Where aspen is an early seral species in conifer stands, these treatments are also designed to restore aspen. Alternative 7R also increases emphasis on selection harvest in the Englemann spruce/subalpine fir cover type over other alternatives. Unsuitable land harvest is greatest for Alternative 7R among all alternatives, emphasizing clearcutting in the aspen cover type and preparatory shelterwood harvests in conifer designed primarily to restore aspen.

NON-DECLINING YIELD

Non-Declining yield of timber harvest volume was determined for each alternative. A minimum/maximum treatment acreage was specified in VDDT and probabilities were adjusted; then, successive runs were made of the model for each alternative until the resulting harvest volume varied by no more than 20 percent per decade over ten decades. Adhering to this constraint was a key determinant in setting harvest probabilities.

Long-Term Sustained Yield Capacity

A Long Term Sustained Yield Capacity (LTSYC) attribute is included in the VDDT model, which calculates this figure. See Chapter 4, Timber Sale Program section of the EIS, for the LTSYC by alternative.

Issue 8

Roadless Area Management and Recommended Wilderness

🗁The **Wilderness Recommendation** Analysis is located in **Appendix C** of this document. The Forest assembled an ad hoc team consisting of Planning Team members and Recreational Specialists from each District. The team met over a period of a year. Using the six Wilderness characteristics, they reviewed and evaluated the attributes of each of the thirty-four Roadless Areas using those criteria. As part of the review, they incorporated findings from the 1996 Roadless Reinventory Report that shows past activities in each of the Roadless Areas over the last ten to fifteen years. From this information, the team gave each Roadless Area a new Wilderness Attribute Rating (WAR). They then compared the updated WARs ratings to the 1985 Plan. See Appendix C for more detailed information.

🗁The **Roadless Area Re-evaluation** is located in **Appendix R** of this document. The Forest Planning Team and District representatives met over the past year to re-evaluate management of IRA's in absence of the Roadless Area Conservation Initiative (RACI). Using the nine characteristics of IRA's identified in the RACI, the Forest reviewed and evaluated the attributes of each of the thirty-four Roadless Areas. As part of the review, they incorporated findings from the 1996 Roadless Reinventory Report that shows past activities in each of the Roadless Areas over the last ten to fifteen years, the updated WAR ratings, public comments on the Draft EIS. Using this information, the Team recommended prescriptions for managing the IRA's. Existing management prescriptions were used and many different prescriptions could be applied on the same IRA. See Appendix R for more detailed information.

Issue 9

Wildlife Habitat Management

🗁Detailed information on the analysis processes used in this Final EIS is in Appendix D. This separate appendix explains in detail the rationale use for analyzing potential effects to Big Game and the Viability Analysis as required by NFMA. The Fish Population and Rare Plant Viability Evaluations are also included in Appendix D.

The following calculations show how the smoke emission numbers were calculated for Table 4.122 of the EIS.

SMOKE ANALYSIS (PM10) IN TIMBER/MIXED CONIFERS/ASPEN

All emission amounts were derived from Table 4.116 PM_{10} Emission by Vegetation type in the FEIS.

ALTERNATIVE 1

0 Acres treated
No Smoke

ALTERNATIVE 2

1,740 Acres treated of Conifer, Mixed Conifer, Aspen

Conifer, Aspen, Mixed Conifer = 822.0 lbs/AC emitted
Aspen = 236.0 lbs/AC emitted
1058 lbs/AC/2 = **529 lbs/AC Ave.**

529 lbs/AC x 1,740 AC treated = 920,460 lbs/2000 lbs/ton = **460 tons**

ALTERNATIVE 3

1,990 Acres treated of Douglas Fir, Lodgepole Pine, Mixed Conifer

Spruce/Fir = 822 lbs/AC emitted
Lodgepole Pine = 503 lbs/AC emitted
Douglas Fir = 488 lbs/AC emitted
1,813 lbx/AC/3 = **604 lbs/AC Ave.**

604 lbs/AC x 1,990 AC treated = 1,202,623 lbs/2000 lb/ton = **601 tons**

ALTERNATIVE 4

4,990 Acres treated of Mixed Conifer, Conifer, Aspen

Mixed Confier, Conifer = 822 lbs/AC emitted
Aspen = 236 lbs/AC emitted
1,058 lbs/AC/2 = **529 lbs/AC Ave.**

529 lbs/AC x 4,990 AC treated = 2,639,710 lbs/2000 lbs/ton = **1,320 tons**

ALTERNATIVE 5

1,920 Acres treated of Mixed Conifer, Conifer, Aspen
Mixed Conifer, Conifer = 822 lbs/AC emitted
Aspen = 236 lbs/AC emitted
1,058 lbs/AC/2 = **529 lbs /AC Ave.**

529 lbs/AC x 1,920 AC treated = 1,015,680 lbs/2000 lbs/ton = **508 tons**

ALTERNATIVE 6

2,080 Acres treated of Aspen, Mixed Conifer, Conifer

Mixed Conifer, Conifer = 822 lbs/AC emitted
Aspen = 236 lbs/AC emitted
1,058 lbs/AC/2 = **529 lbs /AC Ave.**

529 lbs/AC x 2,080 AC treated = 1,100,320 lbs/2000 lbs/ton = **550 tons**

ALTERNATIVE 7

2,680 Acres treated of Conifer, Mixed Conifer, Aspen

Mixed Conifer, Conifer = 822 lbs/AC emitted
Aspen = 236 lbs/AC emitted
1,058 lbs/AC/2 = **529 lbs /AC Ave.**

529 lbs/AC x 2,680 AC treated = 1,417,720 lbs/2000 lbs/ton = **709 tons**

ALTERNATIVE 7R

3,500 Acres treated of Conifer, Mixed Conifer, Aspen

Mixed Conifer, Conifer = 822 lbs/AC emitted
Aspen = 236 lbs/AC emitted
1,058 lbs/AC/2 = **529 lbs/AC Ave.**

529 lbs/AC x 3,500 AC treated = 1,851,500 lbs/2000 lbs/ton = **926 tons**

PM 2.5 PORTION OF TOTAL PM_{10} IN TIMBER/MIXED CONIFER/ASPEN

All emission amounts were derived from Table 4.116 PM_{10} Emission by Vegetation type in the FEIS.

ALTERNATIVE 1

0 Acres treated
No Smoke

ALTERNATIVE 2

1,740 Acres treated of Conifer, Mixed Conifer, Aspen

Mixed Conifer, Conifer = 697.5 lbs/AC emitted
Aspen = 200.0 lbs/AC emitted
897.5 lbs/AC/2 = **448.75 lbs/AC Ave.**

448.75 lbs/AC x 1,740 AC treated = 720,825 lbs/2000 lbs/ton = **389 tons**

ALTERNATIVE 3

1,990 Acres treated of Douglas Fir, Lodgepole Pine, Mixed Conifer

Spruce/Fir = 697.5 lbs/AC emitted
Lodgepole Pine = 427.0 lbs/AC emitted
Douglas Fir = 414.0 lbs/AC emitted
1538.5 lbs/AC/3 = **513 lbs/AC Ave.**

513 lbs/AC x 1,990 AC treated = 1,020,538/2000 lbs/ton = **511 tons**

ALTERNATIVE 4

4,990 Acres treated of Conifer, Mixed Conifer, Aspen

Mixed Conifer, Conifer = 697.5 lbs/AC emitted
Aspen = 200.0 lbs/AC emitted
897.5 lbs/AC/2 = **448.7 5 lbs/AC Ave.**

448.75 lbs/AC x 4,990 AC treated = 2,240,510/2000 lbs/ton = **1,118 tons**

ALTERNATIVE 5

1,920 Acres treated of Conifer, Mixed Conifer, Aspen

Mixed Conifer, Conifer = 697.5 lbs/AC emitted
Aspen = 200.0 lbs/AC emitted
897.5 lbs/AC/2 = **448.75 lbs/AC Ave.**

448.75 lbs/AC x 1,920 AC treated = 860,160 lbs/2000 lbs/ton = **430 tons**

ALTERNATIVE 6

2,080 Acres treated of Conifer, Mixed Conifer, Aspen

Mixed Conifer, Conifer = 697.5 lbs/AC emitted
Aspen = 200.0 lbs/AC emitted
897.5 lbs/AC/2 = **448.75 lbs/AC Ave.**

448.75 lbs/AC x 2,080 AC treated = 931,840 lbs/2000 lbs/ton = **466 tons**

ALTERNATIVE 7

2,680 Acres treated of Conifer, Mixed Conifer, Aspen

Mixed Conifer, Conifer = 697.5 lbs/AC emitted
Aspen = 200.0 lbs/AC emitted
897.5 lbs/AC/2 = **448.75 lbs/AC Ave.**

448.75 lbs/AC x 2,680 AC treated = 1,200,640 lbs/2000 lbs/ton = **600 tons**

ALTERNATIVE 7R

3,500 Acres treated of Conifer, Mixed Conifer, Aspen

Mixed Conifer, Conifer = 697.5 lbs/AC emitted
Aspen = 200.0 lbs/AC emitted
897.5 lbs/AC/2 = **448.75 lbs/AC Ave.**

448.75 lbs/AC x 3,500 AC treated = 1,568,000 lbs/2000 lbs/ton = **784 tons**

SMOKE ANALYSIS – PM_{10} IN SAGEBRUSH/MOUNTA IN SHRUB

All emission amounts were derived from Table 4.116 PM_{10} Emission by Vegetation type in the FEIS.

ALTERNATIVE 1

13,000 Acres treated

Sagebrush = 62.5 lbs/AC emitted

62.5 lbs/AC x 13,000 AC treated = 812,500 lbs/2000 lbs/ton = **406 tons**

ALTERNATIVE 2

7,750 Acres treated

Sagebrush is 62.5 lbs/AC emitted

62.5 lbs/AC x 7,750 AC treated = 484,375 lbs/2000 lbs/ton = **242 tons**

ALTERNATIVE 3

10,000 Acres treated

Sagebrush = 62.5 lbs/AC emitted

62.5 lbs/AC x 10,000 AC treated = 625,000 lbs/2000 lbs/ton = **312 tons**

ALTERNATIVE 4

7,750 Acres treated

Sagebrush = 62.5 lbs/AC emitted

62.5 lbs/AC x 7,750 AC treated = 484,375 lbs/2000 lbs/ton = **242 tons**

ALTERNATIVE 5

7,080 Acres treated

Sagebrush = 62.5 lbs/AC emitted

62.5 lbs/AC x 7,080 AC treated = 442,500 lbs/2000 lbs/ton = **221 tons**

ALTERNATIVE 6

6,000 Acres treated

Sagebrush = 62.5 lbs/AC emitted

62.5 lbs/AC x 6,000 AC treated = 375,000 lbs/2000 lbs/ton = **187 tons**

ALTERNATIVE 7

7,975 Acres treated

Sagebrush = 62.5 lbs/AC emitted

62.5 lbs/AC x 7,975 AC treated = 498,437 lbs/2000 lbs/ton = **249 tons**

ALTERNATIVE 7R

4,000 Acres treated

Sagebrush = 62.5 lbs/AC emitted

62.5 lbs/AC x 4,000 AC treated = 250,000 lbs/2000 lbs/ton = **125 tons**

SMOKE ANALYSIS– $PM_{2.5}$ PORTION OF PM_{10} IN SAGEBRUSH/MOUNTAIN SHRUB

All emission amounts were derived from Table 4.116 PM_{10} Emission by Vegetation type in the FEIS.

ALTERNATIVE 1

13,000 Acres treated

Sagebrush = 53.0 lbs/AC emitted

53.0 lbs/AC x 13,000 AC treated = 689,000 lbs/2000 lbs/ton = **344 tons**

ALTERNATIVE 2

7,750 Acres treated

Sagebrush = 53.0 lbs/AC emitted

53.0 lbs/AC x 7,750 AC treated = 410,750 lbs/2000 lbs/ton = **205 tons**

ALTERNATIVE 3

10,000 Acres treated

Sagebrush = 53.0 lbs/AC emitted

53.0 lbs/AC x 10,000 AC treated = 530,000 lbs/2000 lbs/ton = **265 tons**

ALTERNATIVE 4

7,750 Acres treated

Sagebrush = 53.0 lbs/AC emitted

53.0 lbs/AC x 7,750 AC treated = 410, 750 lbs/2000 lbs/ton = **205 tons**

ALTERNATIVE 5

7,080 Acres treated

Sagebrush = 53.0 lbs/AC emitted

53.0 lbs/AC x 7,080 AC treated = 375,240 lbs/2000 lbs/ton = **188 tons**

ALTERNATIVE 6

6,000 Acres treated

Sagebrush = 53.0 lbs/AC emitted

53.0 lbs/AC x 6,000 AC treated = 318,000 lbs/2000 lbs/ton = **159 tons**

ALTERNATIVE 7

7,975 Acres treated

Sagebrush = 53.0 lbs/AC emitted

53.0 lbs/AC x 7,975 AC treated = 422,675 lbs/2000 lbs/ton = **211 tons**

ALTERNATIVE 7R

4,000 Acres treated

Sagebrush = 53.0 lbs/AC emitted

53.0 lbs/AC x 4,000 AC treated = 212,000 lbs/2000 lbs/ton = **106 tons**