TYPICAL STRUCTURE EXAMPLES

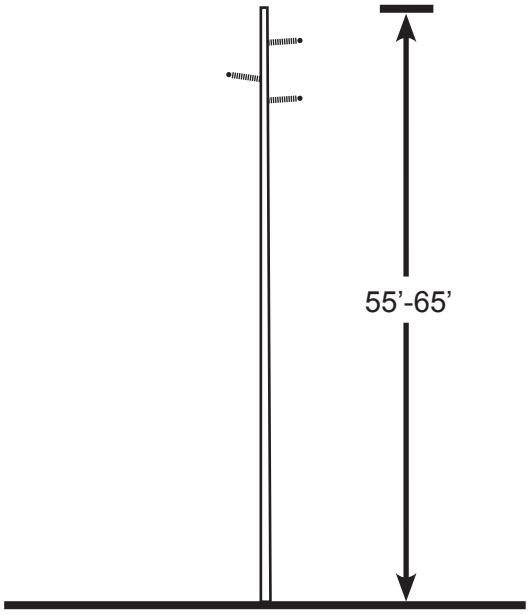

Single Circuit 69kV Line
Steel Pole Structure

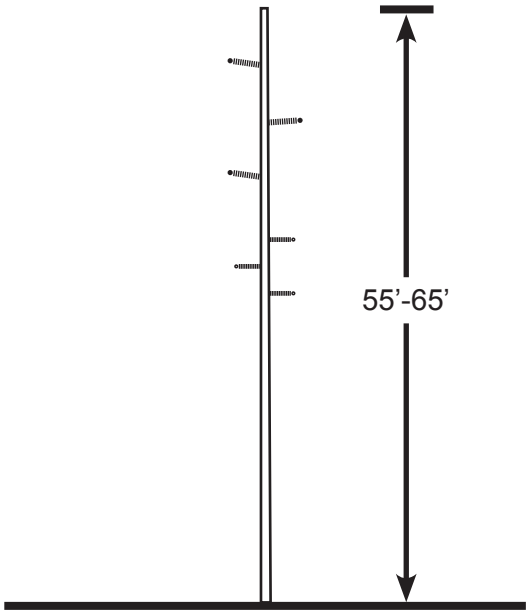

Single Circuit 69kV Line with 12kV Underbuild
Steel Pole Structure

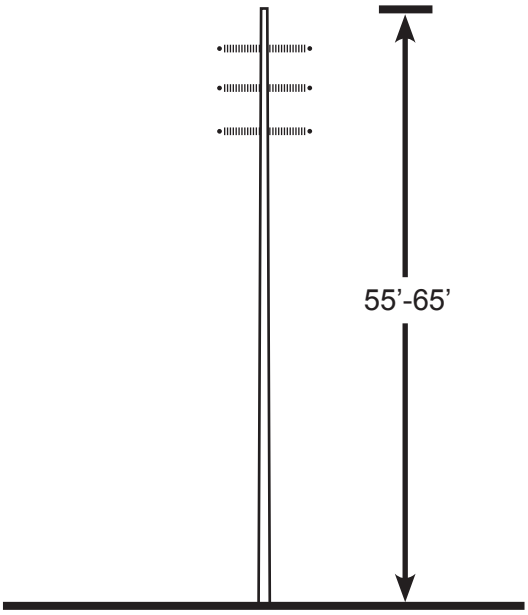

Double Circuit 69kV Line Steel Pole Structure

Yavapai to Chino Valley 69kV Subtransmission Line Project
Figure 2