# TYPICAL STRUCTURE EXAMPLES

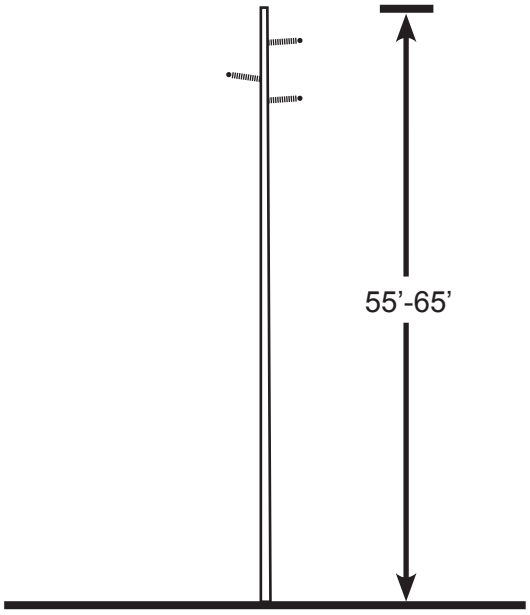


Single Circuit 69kV Line
Steel Pole Structure

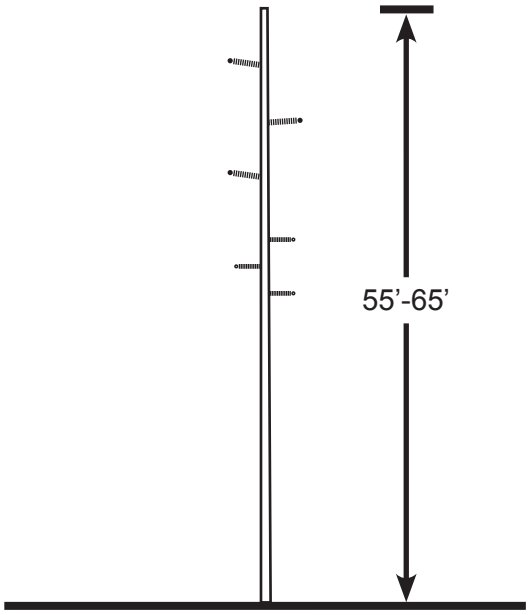


Single Circuit 69kV Line with 12kV Underbuild
Steel Pole Structure

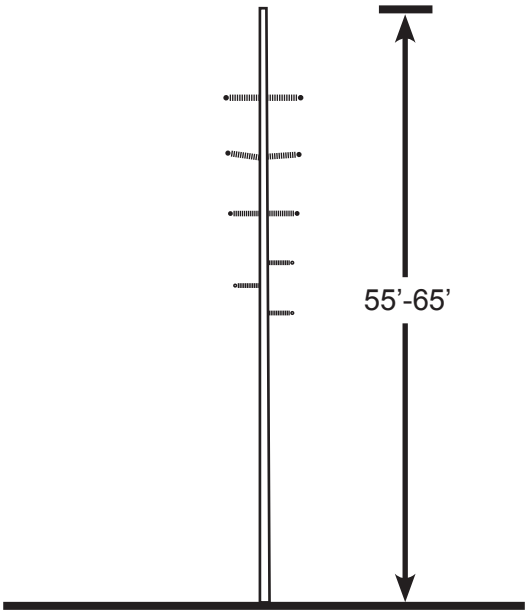


Double Circuit 69kV Line with 12kV Underbuild
Steel Pole Structure

Blue Ridge 69kV Transmission Line Project
Figure 2-1