Perpendicular distance sampling: an alternative method for sampling downed coarse woody debris

Michael S. Williams and Jeffrey H. Gove

Abstract: Coarse woody debris (CWD) plays an important role in many forest ecosystem processes. In recent years, a number of new methods have been proposed to sample CWD. These methods select individual logs into the sample using some form of unequal probability sampling. One concern with most of these methods is the difficulty in estimating the volume of each log. A new method of sampling CWD that addresses this issue is proposed. This method samples each log with probability proportional to the volume of each piece of CWD. While this method generally has a smaller variance than the existing methods, the primary advantage is that a design-unbiased estimator of CWD volume is achieved without ever actually measuring the volume of any logs. This method, referred to as perpendicular distance sampling (PDS), is compared with three existing sampling techniques for CWD using a simulation study on a series of artificial populations. In every case, the variance of the PDS estimator of CWD volume was smaller than the variance of the competing methods, but the difference in the variance was not large between PDS and two of the competing methods. When estimating the number of pieces of CWD, the variance of the PDS estimator was one of the largest amongst the tested methods. An equally important result is that the variant of line intersect sampling used in this study, where the orientation of the line is the same at all sample points, performed poorly in every situation. This and other problems suggest that the suitability of this sampling technique for estimating CWD is questionable.

Résumé : Les débris ligneux grossiers jouent un rôle important dans plusieurs processus écosystémiques des forêts. Récemment, plusieurs nouvelles méthodes ont été proposées pour leur échantillonnage. Ces méthodes sélectionnent les tronçons individuels de bois en se basant sur une certaine forme d'échantillonnage à probabilité inégale. Mais, un problème inhérent à la plupart de ces méthodes vient de la difficulté à estimer le volume de chaque tronçon. Une nouvelle méthode est proposée pour résoudre ce problème. Cette méthode sélectionne chaque tronçon avec une probabilité proportionnelle à son volume. Comparée aux méthodes existantes, elle offre les avantages suivants : elle permet d'estimer le volume total sans aucune mesure du volume individuel des tronçons, elle est non biaisée et a une plus faible variance. Cette méthode appelée échantillonnage à distance perpendiculaire (EDP) a été comparée à trois méthodes existantes en simulant une série de populations artificielles. Dans tous les cas, la variance de l'estimateur EDP du volume total est plus faible que celle des autres méthodes, mais la différence est faible comparé à deux des méthodes existantes. Par contre, la variance de l'estimateur EDP du nombre total des débris ligneux figure parmi les plus élevées des quatre méthodes testées. Un résultat tout aussi important est que cette variante de l'échantillonnage par ligne d'interception n'a pas une bonne performance lorsque l'orientation de la ligne est maintenue constante pour tous les points échantillonnés. Ce problème allié à d'autres faiblesses remettent en question la pertinence de cette méthode pour l'estimation des débris ligneux grossiers.

[Traduit par la Rédaction]

Introduction

Recently there has been a substantial amount of interest in understanding the role of coarse woody debris (CWD) in forest ecosystems. It is of current interest because it serves as habitat for many plant and animal species, a carbon sink for the study of global climate change, and a fuel source for forest fires.

Standing CWD is defined as stumps and snags. Downed CWD is defined as any piece of downed dead woody material that meets some lower size limit. Thus, downed boles, limbs, tree butt sections and root masses, and large diameter logging waste all fall into the category of downed CWD. Because of the nonstandard form of any piece of CWD, there is no internationally recognized definition for what constitutes downed CWD. The type and size of the material designated as CWD varies among classification systems (Helms 1998).

Early sampling methods for CWD were line intersect sampling (LIS) (Warren and Olsen 1964; de Vries 1979; Kaiser 1983) and the related method of planar intersect sampling (Brown 1971). These methods are relatively efficient in terms of the time required to take measurements, and they can also be performed without any specialized field instrumentation. A number of authors have also estimated CWD using adaptations of

Received 22 August 2002. Accepted 7 February 2003. Published on the NRC Research Press Web site at http://cjfr.nrc.ca/ on 16 July 2003.

M.S. Williams.[1] Rocky Mountain Research Station USDA Forest Service, 2150 A Centre Avenue, Suite 361, Fort Collins, CO 80526, U.S.A.
J.H. Gove. USDA Forest Service Northeastern Research Station P.O. Box 640, Durham, NH 03824, U.S.A.

[1]Corresponding author (e-mail: mswilliams@fs.fed.us).

 doi: 10.1139/X03-056 © 2003 NRC Canada

fixed-area plot sampling (Shifley and Schlesinger 1994; Harmon and Sexton 1996; Shifley et al. 1997; Pedlar et al. 2002). While these sampling methods are reasonable solutions, studies such as those of Pickford and Hazard (1978) and Bebber and Thomas (2003) suggest that the variance of the LIS and fixed-area plot sampling estimators can be large unless the sampling effort is substantial. To address the variance problems, foresters have long realized the benefits of unequal probability sampling, where the attribute of interest is positively correlated with the inclusion probability of each population element (see Schreuder et al. 1993, pp. 56–58). The recent interest in CWD has led to the development of a number of new sampling methods that attempt to exploit this benefit. Examples include transect relascope sampling (TRS) (Stahl 1997, 1998), point relascope sampling (PRS) (Gove et al. 1999, 2001), and diameter relascope sampling (DRS) (Bebber and Thomas 2003). The one common element of these methods is the use of an angle gauge to select pieces of CWD. Thus, common to all three of these techniques is the use of unequal probability sampling, where the inclusion probability for each piece is proportional to length or length squared (TRS and PRS, respectively) or cross-sectional area at the midpoint of the log (DRS). One of the primary reasons for the development of these techniques is that the variance of the estimator of CWD volume tends to be small in comparison with the variance of the estimators used in conjunction with LIS or fixed-area sampling methods (Bebber and Thomas 2003). The reason for the reduction in variance is that CWD volume is more highly correlated with the inclusion probability under these designs than when LIS or fixed-area sampling are employed.

A common trait for many of the current sampling methods is that the log volume, denoted by V, must be measured for each piece of CWD that is selected. While methods for estimating the volume of a standing tree are well developed, volume estimation for CWD is more complicated for a number of reasons. Some of the problems are

(1) The piece of CWD may be broken, sections may be missing, or it may not be possible to accurately identify the tree species because of decay. This precludes the use of simple volume and taper models for at least a portion of the population.

(2) Taper models or volume equations generally do not exist for butt logs and root masses, which are forms of CWD.

(3) Logs tend to "deflate" over time as they decay, becoming less circular in cross section because of the force of gravity and resultant loss of structure.

There are three solutions to the problem of estimating log volume. The first is to assume that logs are adequately described by some three-dimensional solid. For example, Robertson and Bowser (1999) assume a truncated cone and determine the volume by measuring the diameters at each end and the total length. Thus, each log has a fixed volume estimate, V^{cone}, and the only consequence of using such an assumption is that the estimator of volume will tend to be biased, with the magnitude of the bias of the estimator determined by a weighted sum of the individual errors between the approximated and true volume, which are given by $V^{\text{cone}} - V$. The alternative approach is to subsample the log and take measurements at random locations to obtain an estimate of the volume using methods such as randomized branch sampling (Gove et al. 2002), importance sampling (Furnival et al. 1986, 1993), and crude Monte Carlo (Valentine et al. 2001). Thus, the log volume is estimated by

$$\hat{V} = V + \epsilon$$

where $E[\epsilon] = 0$ and $\text{var}[\epsilon] = \sigma^2$. The estimator of log volume, for methods such as importance sampling, is design-unbiased, and no bias is incurred by the estimator of total CWD volume. The drawback with subsampling methods is the amount of time required to collect the additional measurements and the additional variance component, ϵ, associated with the estimation of the log volume (Gregoire et al. 2000; Gove et al. 2002). Williams and Wiant (1998, Tables 3–5) show some results for the increase of the standard error of the estimator when importance sampling was used to estimate log volumes of standing trees. In this study, the standard error of the importance sampling estimator ranged from 1.03 to 12.6 times larger than the estimator that used the true standing tree volume. Granted, these results were generated using only one importance sampling measurement per tree, but that the increase ranged from trivial (1.03) to substantial (12.6) is reason enough to warrant additional study or a rather substantial investment of additional measurements. In summary, these two solutions illustrate the usual bias–variance trade-off that has been studied in other forestry applications, such as the centroid method versus importance sampling for log volumes (Wood et al. 1990; Wiant et al. 1996 and references therein).

The third solution involves an existing technique that avoids the need to measure log volume, that is, LIS. In the genral case of elevated logs, as illustrated by Kaiser (1983, example 2c), CWD volume can be estimated by measuring the cross-sectional area intersected by the vertical plane defined by the orientation of the line and the log. However, acquiring an accurate measurement when the orientation of the log and line are similar could be extremely difficult, especially if the log is large or heavily decayed. One option to simplify this measurement would be to assume the cross-sectional area is adequately modeled by the frustrum of a cone or other solid. However, this assumption would be questionable in light of the results of Matern (1956, 1990 and reference therein) and others, who studied the suitability of assuming that the cross-section of a bole could be modeled by an ellipse. As Matern states "...the convex closure of a stem differs from circular form in what can only be described as 'irregular'." Valentine et al. (2001, Appendix B) provide several alternatives to measuring cross-sectional area of a log intersected by an LIS segment.

Another common trait for all of these methods is that the instrumentation necessary for implementation is simple and affordable (e.g., linear tape, prism, angle gauge). However, as noted by Bebber and Thomas (2003), the use of a laser range finder can greatly simplify fieldwork. While the savings in time afforded by modern instrumentation is always of interest, the question is whether better sampling methods are possible given modern instrumentation?

One thing that is apparent from the literature is that CWD is one of the rare exceptions in forest sampling where the performance of the current sampling techniques is not well understood, and there may be alternative techniques to those already proposed. To motivate how one might improve on current tech-

©2003 NRC Canada

niques, the following observations are made regarding CWD sampling:

(1) By definition, a piece of downed CWD should be completely accessible for measurement. Thus, sampling techniques should take advantage of the fact that no part of the log is more or less accessible, and no remote measurements are required.

(2) In comparison with other fixed costs, such as travel and crew time, the cost of modern instrumentation is becoming less of a barrier to adopting new methodology.

(3) While numerous CWD attributes are of interest (e.g., number of pieces, distribution by size and decay class, length, surface area), it is felt that the volume of CWD debris is often the most important and the most difficult to estimate with a high degree of accuracy. Thus, a method that improves on the current state of the art should focus on efficiently estimating this attribute.

(4) Measurement errors are almost always ignored in forest inventories. While the effects of measurement error are fairly well understood for some of the more common forest inventory measurements, such as diameter, basal area, and height (Matern 1956, 1990; Biging and Wensel 1988; Gertner 1990; Williams et al. 1999), little is known about CWD because it has no consistent form. Thus, a new method that minimizes the impacts of known measurement errors offers advantages over estimation techniques that rely on assumptions that may not be correct.

(5) With some exceptions (e.g., salvage sales of a recent blowdown, habitat for endangered species), CWD has no marketable value. Thus, resources for acquiring CWD data will tend to be substantially less than those for attributes such as standing tree volume. This means that it is unlikely that the number of logs tallied at a given point will be large or that stratification will be performed for the specific benefit of variance reduction for CWD estimators.

Given these observations, we propose and test a new method referred to as perpendicular distance sampling (PDS). The basic premise of this technique is that sampling for CWD can be performed quickly and with probability proportional to the true volume of each log. Thus, not only is it possible to obtain design-unbiased estimators of CWD that have appealing minimum variance properties, but concerns regarding the influence of measurements errors and errors associated with predicting or estimating volumes from models are also minimized. Thus, the objectives of this paper are (*i*) to develop the sampling design and derive the estimators for PDS, (*ii*) to compare PDS with some of the alternative sampling strategies for CWD to give a rough idea of the range of reductions in bias and variance of the estimators that are possible, (*iii*) to illustrate the possible biases associated with using simple approximations of the true volume, and (*iv*) to illustrate how the spatial distribution of logs influences the performance of CWD estimators.

One problem with a study of CWD estimators is that the sampling strategy, measurement techniques, and study variables can vary greatly depending on the goals of the survey. For example, the variables of interest for a specialized study of CWD may include, volume, number of pieces, decay status, size distribution, surface area, and number of fruiting bodies per log. On the other hand, the variables of interest for a multiresource large-scale inventory may be only volume and volume by broad size, habitat, or decay classes. This paper will compare CWD estimators in terms of a large-scale forest inventory. The results may not directly apply to all studies.

The estimators

The tree-centered concept is often used to develop variable radius plot (VRP) sampling and areal sampling in general (see Husch et al. 1982, pp. 224–225). A similar approach will be used in this paper. The fundamental idea of the tree-centered approach is that visiting a sample point with coordinates (x, y) and selecting trees under VRP or fixed-area sampling is equivalent to an imaginary circle being drawn about each tree. Each tree is selected into the sample any time a sample point falls within the circle. This same idea will be used to develop the estimators in this study. The difference is that instead of using a tree-centered circle, each sampling technique defines an "inclusion zone" about each log, and the log is selected into the sample whenever a sample point falls within the inclusion zone.

Four different CWD sampling techniques were studied: LIS, PDS, PRS, and DRS. Transect relascope sampling was not implemented because it is expected to have variance properties that are similar to PRS.

For each sampling technique, let the population cover an area denoted by A, assuming A is a flat plane with area $|A|$. For each point visited on the ground, the estimator considered here is

$$[1] \qquad \hat{Z}_j = \sum_{i=1}^{n_j} \frac{z_i}{\pi_i}$$

where z_i is the attribute of interest for log i at point j, π_i is its probability of inclusion, and n_j is the number of logs tallied at the point. For this study, $z_i = V_i$ and 1 when estimating total CWD volume and number of pieces of CWD, respectively. The π_i values given by $\pi_i = a_i/|A|$, where a_i is the area of the inclusion zone within the boundary of the population. Mandallaz (1993), Eriksson (1995), Mandallaz and Ye (1999), Williams (2001), and Valentine et al. (2001) discuss methods of deriving the properties of this estimator by treating $\hat{Z}$ as a function of the random variable that determines the locations of the sample points. Thus, the population of interest is the set of (x, y) coordinates for all points in A. A result of this method is the idea of a "sampling surface" (Williams 2001), which is a three-dimensional map of every possible sample outcome over A. This surface can also be thought of as a visualization technique for displaying the reference set (Gregoire 1998). For each sampling technique, the three-dimensional sampling surface can be constructed across the population using the following algorithm:

(1) For every log i, place the inclusion zone about the log.

©2003 NRC Canada

Fig. 1. Example data set consisting of two logs located within an area covering 1 ha.

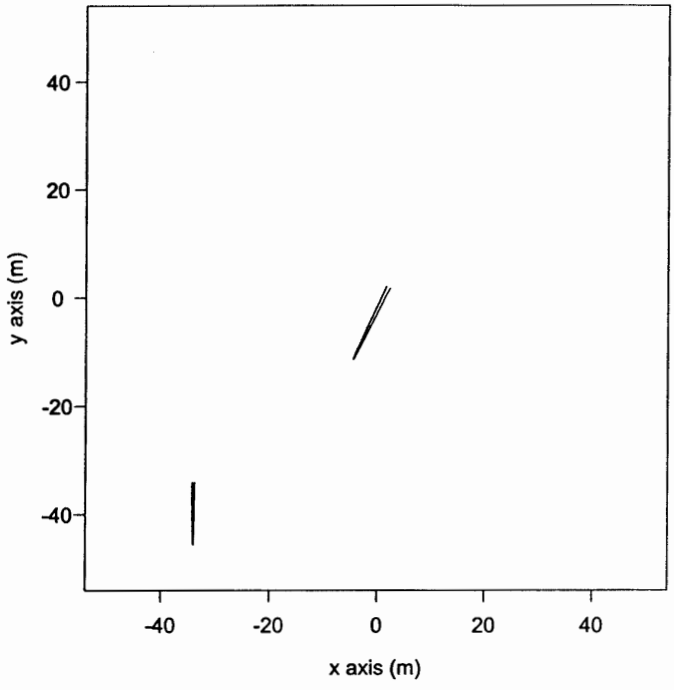

(2) Use the inclusion zone boundary to construct a three-dimensional solid of height $z_i|A|/a_i$, where a_i is the area of the inclusion zone that falls within A.

(3) Define the height of the surface at any coordinate (x, y) as the sum of the heights of the overlapping solids defined for each log that would be selected, i.e., $\hat{Z}(x, y) = \sum_{i=1}^{n} z_i|A|/a_i$.

As suggested by Gregoire (1998), a detailed description of the properties of $\hat{Z}_*$, where $*$ denotes LIS, PDS, PRS, and DRS is given in the Appendix. A small data set consisting of two logs is used to illustrate some of the properties of each sampling technique. These two logs will be used to visually illustrate the differences in the inclusion zone and the z_i/π_i value for each sampling technique. Figure 1 shows the relative size and position of both logs within an area A that covers 1 ha.

Developing line intercept sampling

Of the methods studied, line intercept sampling is the most well developed and by far the most flexible of the methods. When this method is used, a line of length L is established at a random location, and logs are selected into the sample when the line and log intersect. Some options for implementing LIS are whether the line orientation is fixed or random at all locations, whether the log is included in the sample when part of the log is covered by the line or when inclusion is based on the line intersecting the central axis of the log (e.g., the long axis of the log is viewed as a line or needle for the purpose of inclusion in the sample), and whether the design- or model-based approach is used to make inferences about the population. Other options not discussed here include using an L-shaped transect (Gregoire and Valentine 2003). Interested readers should consult Kaiser (1983). He provides an extensive literature review and a concise development of LIS using the design-based approach to inference.

There are two possible sources of randomization for LIS under the design-based approach. The first is the random (x, y) coordinate within A that is used to locate the transect. The second possible source of randomization is the orientation of the line, which will be denoted by θ. Kaiser (1983) notes that the distribution for θ is usually either uniform$[0, \pi)$ or θ is a fixed constant. In the latter case, the only source of randomization is the location of the sample point. He refers to the case of $\theta =$ constant as the degenerate distribution for θ. He also notes that the attributes measured on each log can be viewed as either fixed quantities or random variables. The term degenerate is also used to refer to situations where the attributes measured on each log are a fixed quantity.

Only one version of LIS was implemented in this study. It is loosely based on the CWD inventory techniques used by The Forest Inventory and Analysis program in the United States (Forest Inventory Analysis 2002). We use a sampling design where the orientation of the line is fixed for all samples (i.e., the degenerate distribution for θ), and the attribute measured on each log is also fixed. This will be referred to as degenerate LIS. The term random-orientation LIS will be used to describe situations where θ is nondegenerate. The long axis of the log is viewed as a line, and the log is selected into the sample whenever the line crosses the long axis of the log. The log was viewed as a line because it simplified the implementation of the simulation study. Inference is made with respect to the design, as is common to all techniques in this study. We chose to implement degenerate LIS because many large-scale forest inventories use this approach to simplify training and data collection. It will be shown that this simplification negatively impacts the performance of LIS.

For this study, the length of the line used for sampling is given by L, and the line is oriented parallel to the x axis ($\theta = 0$). Logs are assumed to have no curvature with the length of each log given by H (height), and the orientation of each log is given by the angle ϕ in radians. A log is included in the sample whenever the sampling line intersects the line that defined the center of the log (see de Vires (1986, pp. 242–250) for examples of viewing the log as a needle). The inclusion zone for log i, which is denoted by a^{LIS}, is the area within which the log will be selected by the line. Thus, a^{LIS} forms a parallelogram of area $a^{\mathrm{LIS}} = LH\sin(\phi)$. The LIS estimator of total CWD volume is

$$[2] \qquad \hat{Z}_{\mathrm{LIS}}(x, y) = \sum_{i=1}^{n(x,y)} \frac{z_i|A|}{a_i^{\mathrm{LIS}}} = \sum_{i=1}^{n(x,y)} \frac{|A|V_i}{LH_i\sin(\phi_i)}$$

where $n(x, y)$ is the number of logs tallied when the line is located with coordinates (x, y), and $z_i = 1$ and V_i when estimating total number of logs and volume of CWD, respectively. The inclusion zone and the resulting $z_i|A|/a_i^{\mathrm{LIS}}$ for a data set containing two logs is depicted in Fig. 2. Note that the estimate derived from one of the logs is vastly different from that of the other. This can occur whenever a log has a similar orientation to that of the line and illustrates the potentially low correlation between the attribute of interest z and its inclusion probability π when degenerate LIS is used. Also note that for this version of LIS, the volume of each log must be estimated, which is in

©2003 NRC Canada

Fig. 2. Inclusion areas and response surface height for LIS with a fixed orientation. Note the substantial difference in the height of the response surface generated by each log. Schematic of the experimental setup.

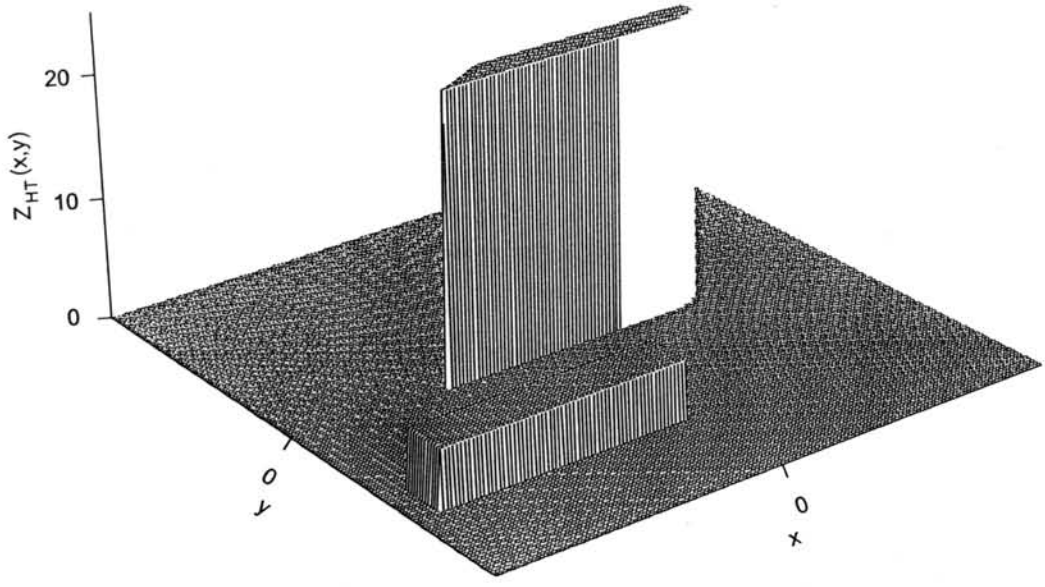

contrast with results given by Kaiser (1983, examples 2b and 2c).

Developing perpendicular distance sampling

Many forest sampling techniques are closely related to VRP sampling. Thus, an understanding of the benefits of VRP sampling will be helpful for the development of PDS. Probably the greatest advantage of VRP sampling is that estimates of basal area can be quickly and efficiently estimated. The reason for the statistical efficiency is that given a reasonable list of assumptions (see Schreuder et al. 1993, p. 119), trees are selected into the sample with probability proportional to their basal area. The reason for the practical efficiency in terms of field effort is that only a count of the trees at each sample location is required. Thus, when an angle gauge is used, trees that are obviously in the sample do not require any measurements. Measurements of the basal area are required only to check if "borderline" trees should be included or excluded from the sample and when an estimate for an attribute other than basal area is desired (e.g., volume, number of stems).

PDS is developed using the exact same reasoning. The exception being the realization that CWD can be sampled with probability proportional to the actual volume of each log. This is illustrated in Fig. 3, where a series of CWD centered inclusion zones are drawn about a log. The property of each inclusion zone is that the area is $2K_{PDS}V$, where V is the true volume of the log, K_{PDS} is a constant similar to the basal area factor in VRP sampling (see Husch et al 1983, p. 228), and 2 represents the fact that the area enclosed on both sides of the log is twice the log volume. Note that K_{PDS} is just a multiplicative factor of the log volume with units m^{-1}. For example, if $K_{PDS} = 2$ then the area of the inclusion zone is four times the log volume.

The first reaction to this figure is that drawing an area that is proportional to log volume is nice, but not practical. However, note that the geometry for determining when a point falls within the inclusion zone is fairly simple. This is depicted in Fig. 3 and the algorithm for selecting a log is

Fig. 3. Example inclusion zones (broken lines) for a series of different K_{PDS} values. The profile of the log is given by the dark lines, while the broken lines indicate the boundaries of the inclusion zones. An example of a sample location, (x, y), and the perpendicular distance, |pd|, are given.

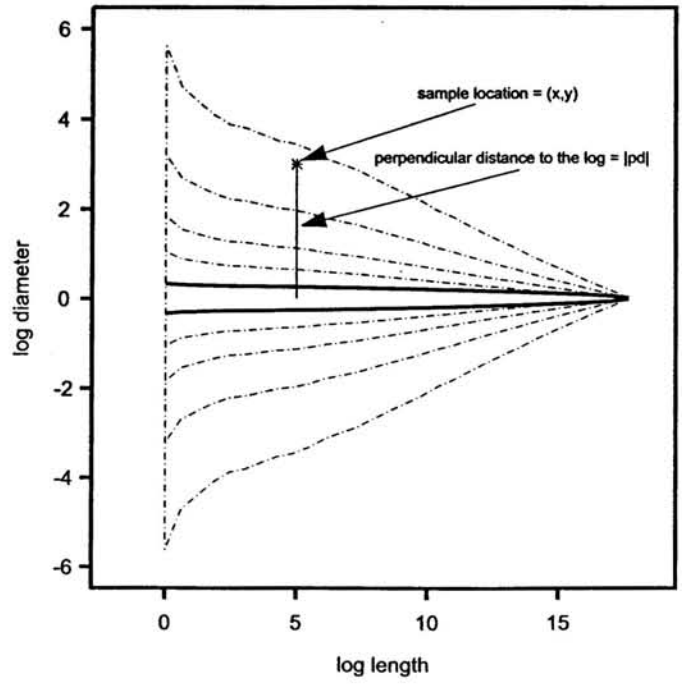

(1) Measure the perpendicular distance, denoted by |pd|, from the sample location (x, y) to the center of the long axis of the log.

(2) Select the log if $|pd| \leq K_{PDS}g_{cross}$, where g_{cross} is the cross-sectional area of the log at the point of measurement.

Also, note that the design-unbiased estimator of total CWD

©2003 NRC Canada

volume is

$$[3] \quad \hat{Z}_{\mathrm{PDS}}(x, y) = \sum_{i=1}^{n(x,y)} \frac{z_i|A|}{a_i^{\mathrm{PDS}}} = \sum_{i=1}^{n(x,y)} V_i \frac{|A|}{2K_{\mathrm{PDS}}V_i} = \frac{|A|n(x, y)}{2K_{\mathrm{PDS}}}$$

so the actual log volume is never measured. Note that just as in VRP sampling, logs where |pd| is obviously less than $K_{\mathrm{PDS}}g_{\mathrm{cross}}$ can be selected into the sample with no actual measurements. Thus, the advantage for PDS is that only the small proportion of borderline logs need to be measured for cross-sectional area. Borderline logs can then be carefully measured to accurately determine whether their cross-sectional area is large enough to warrant inclusion in the sample. Matern (1956, 1990) suggests that the mean of multiple diameter measurements can be used to accurately assess the convex closure of the cross-section. For highly decayed logs that have concave areas in the cross-section, the isopomorphic deficit should also be accounted for when determining g_{cross}. While this seems like a complex set of measurements, note that a series of these measurements would be needed on every sampled log to estimate the true volume using a technique such as importance sampling. Also note that because g_{cross} never appears in the estimator, $\hat{Z}_{\mathrm{PDS}}$ is essentially free of any measurement error, and measurements only need to be taken until it can be determined whether the log is in or out of the sample. Thus, the measurement of isopomorphic deficit is not needed if the convex closure of the candidate log is too small to warrant inclusion in the sample.

Figure 4 depicts the sampling surface for the two logs. Note that the height of the surface for both logs is identical. Estimators with this property tend to be very efficient because the variance is determined only by the random sample size ($n(x, y)$) at each point.

It should be noted that similar sampling techniques for estimating standing tree volume already exist in the literature. Examples include critical height sampling (see Kitamura 1962; Iles 1979, 1988, 1990) and the method of Ueno (1979, 1980). A summary of these techniques can be found in Schreuder et al. (1993, pp. 128–132). The primary difference between these methods and PDS is that the inclusion zone is three-dimensional rather than the two-dimensional inclusion zone that is common to all of the methods described in this paper.

Developing point relascope sampling

Point relascope sampling uses an angle gauge where the gauge angle η is much larger than that of VRP sampling. This wide angle gauge is used to select logs into the sample with probability proportional to the squared length, H^2, of each log. The resulting inclusion zone forms a pair of overlapping circles on the side of each log. Using the results of Gove et al. (1999), with slightly different notation, the inclusion zone is given by

$$a^{\mathrm{PRS}} = r^2\{2\pi - [\eta - \sin(\eta)]\}$$

where $r = H/(2\sin(\eta/2))$, and π is the universal constant. The η value used here is equal to twice the angle ν found in Gove et al. (1999). The estimator of total CWD volume is

$$[4] \quad \hat{Z}_{\mathrm{PRS}}(x, y) = \sum_{i=1}^{n(x,y)} \frac{z_i|A|}{a_i^{\mathrm{PRS}}} = \sum_{i=1}^{n(x,y)} \frac{|A|V_i}{r^2\{2\pi - [\eta - \sin(\eta)]\}}$$

The inclusion zones for the same two logs is depicted in Fig. 5. Note that the height of the graph over the two inclusion zones varies, but the difference is not nearly as large as the difference for LIS (Fig. 2).

Developing diameter relascope sampling

DRS differs from traditional variable radius plot sampling only in the location at which the cross-sectional area measurements are taken and the orientation of the prism. To determine if a log is sampled, the midpoint of the log ($H/2$) is located, and the prism is oriented to determine if the log meets the criteria for selection. Thus, the inclusion of a log in the sample is proportional to the cross-sectional area of the log at the midpoint, with

$$a^{\mathrm{DRS}} = \frac{\pi d_{\mathrm{mid}}^2 K_{\mathrm{DRS}}}{16}$$

where K_{DRS} is the gauge angle of the prism. The estimator of total CWD volume is

$$[5] \quad \hat{Z}_{\mathrm{DRS}}(x, y) = \sum_{i=1}^{n(x,y)} \frac{z_i|A|}{a_i^{\mathrm{DRS}}} = \sum_{i=1}^{n(x,y)} \frac{16|A|V_i}{\pi d_{\mathrm{mid}}^2 K_{\mathrm{DRS}}}$$

The inclusion zone for the two logs is depicted in Fig. 6.

A concern with both this technique and PDS is that the section of the stem that must be viewed to determine inclusion in the sample will not always be visible when the log lies on the ground. The other concern is that the prism measurement cannot account for decay of the log. Thus, proper implementation of the technique requires that all borderline logs are carefully measured to determine if the log should be included.

Data description

Data sets that adequately describe the location, orientation, shape, and volume of pieces of downed CWD are not available. Thus numerous CWD populations were created for the purpose of comparing the estimators.

The size and form of each log is loosely based on real data. The data set used comprised $N = 183$ ponderosa pine (*Pinus ponderosa* Dougl. ex P. & C. Laws) trees. For each tree, diameter outside bark d and length h measurements were taken every 1.22 m (4 ft) on felled trees collected at various timber sale sites on the Black Hills National Forest, U.S.A. A total of 2010 diameter and height measurements were taken, with most trees having between 3 and 10 sections. Diameter at breast height D and total height H from a 0.305 m (1 ft) stump to the tip were also recorded for each tree.

©2003 NRC Canada

Fig. 4. Inclusion areas and response surface height for perpendicular distance sampling. Note that the height of the response surface for each log is identical.

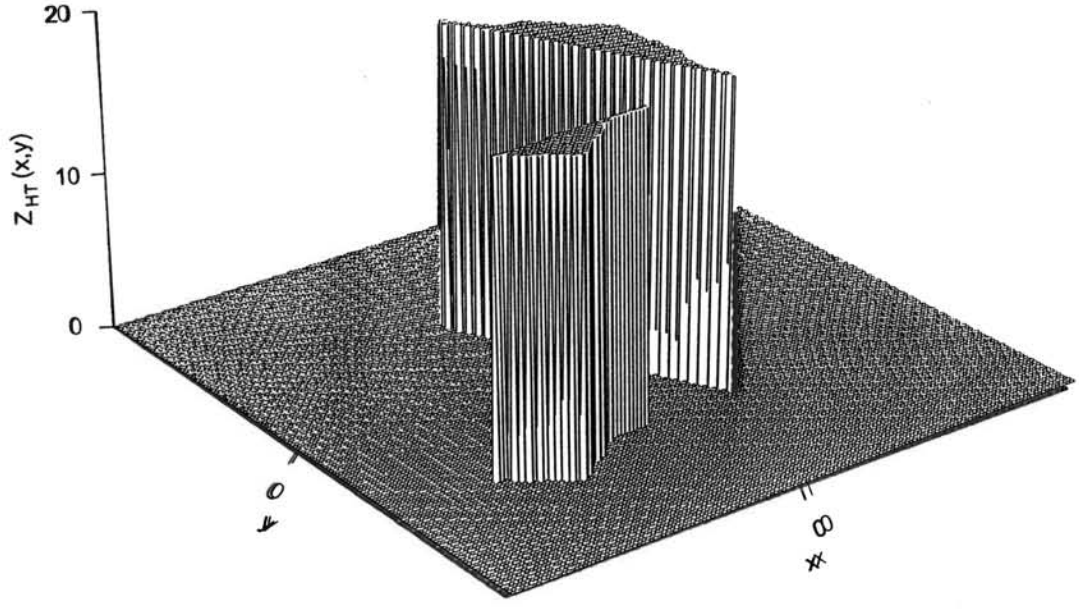

Fig. 5. Inclusion areas and response surface height for point relascope sampling. Note the shape of the overlapping circles that form the inclusion zones and that the height of the response surfaces differs for the two logs, but not as drastically as for line intercept sampling.

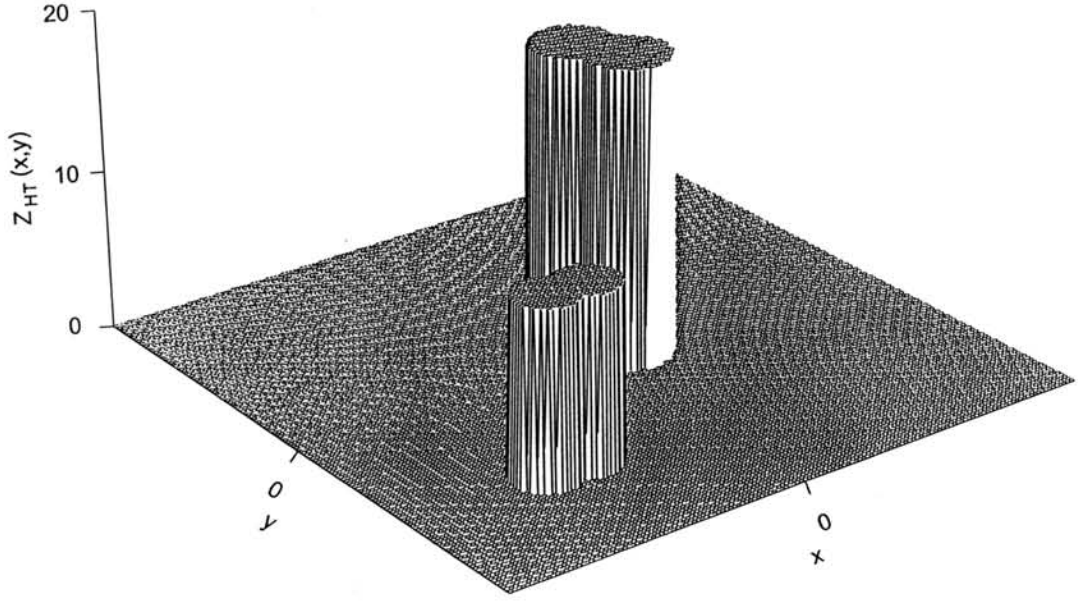

For this study, the diameter and cross-sectional area were needed at every point on the stem as well as the true volume. To meet this requirement, a taper function was fitted to the data. The problem with using a single taper equation derived from these data is that every log in the data set would have the same profile, which could affect the outcome of the study. Individual taper functions could not realistically be fit to each tree because many of the smaller trees only had three to five measurements. To address this problem, an individual taper function for each tree was created using the following method. First, a Max and Burkhart (1976) taper equation was fitted to the 2010 (d, h) values. From this function, a set of 30 (d, h) values that represented the profile of an "average" tree was derived by using the mean D and H values from the data set. The final step was to fit a new taper equation to the data for each tree where the difference in taper between each tree was created by perturbing each d value with a random multiplicative error $\epsilon \sim$ uniform(0.9, 1.1). Thus, the model fit to each tree was

$$d_i\epsilon = D(\hat{\beta}_1 H' + \hat{\beta}_2 H'^2 + \hat{\beta}_3 H'^3 + \hat{\beta}_4 H'^4 + \hat{\beta}_5 H'^5 + \hat{\beta}_6 H'^6) + \epsilon'$$

where $H' = 1 - h_i/H$, and $\epsilon' \sim N(0, \sigma^2\epsilon)$. While this function is not a standard taper function, such as the ones proposed by

©2003 NRC Canada

Fig. 6. Inclusion areas and response surface height for diameter. Each inclusion zone is a circle and it is a function of the log diameter at the midpoint ($H/2$) of the log.

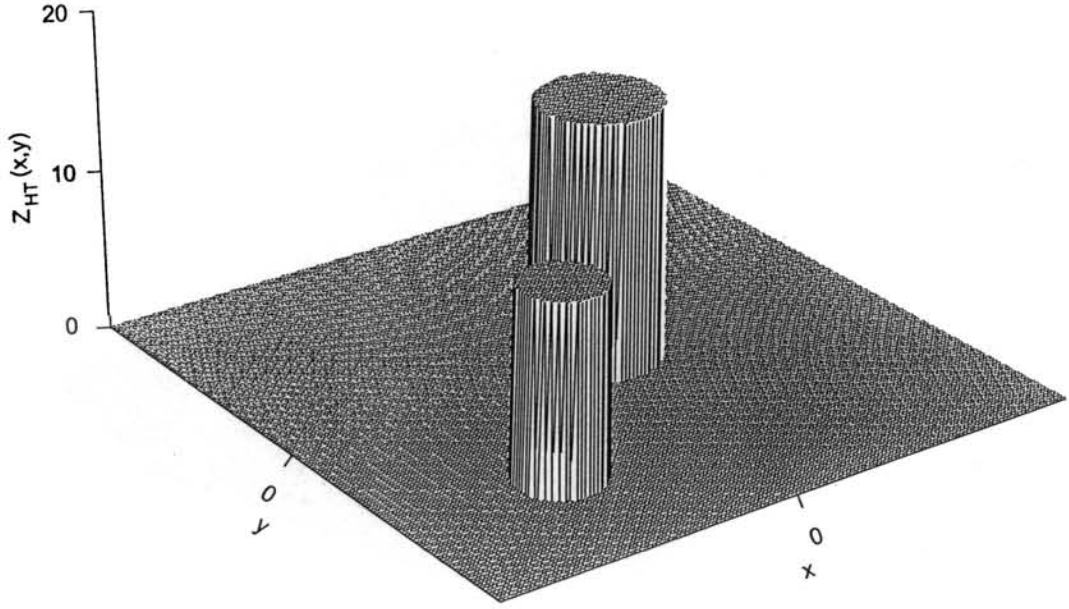

Fig. 7. Relative diameter versus relative height profiles for each log in the data set.

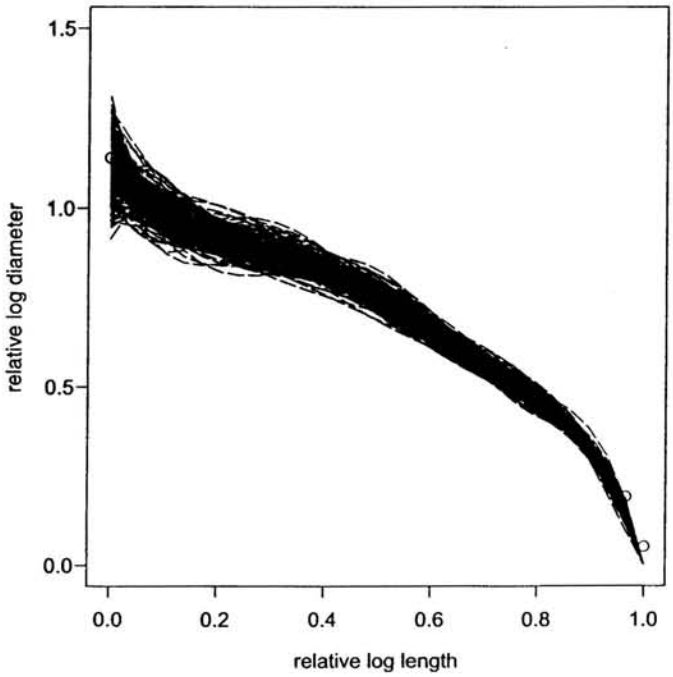

Max and Burkhart (1976), it simplified the simulation study and adequately fit the data. The taper functions for each tree in the data set are displayed in Fig. 7.

Each taper function was used to generate the volume of each tree using the true D and H, with the volume being calculated using

$$V_{\text{true}} = \frac{\pi D^2}{4} \int_0^H \left(\hat{\beta}_1 H' + \hat{\beta}_2 H'^2 + \hat{\beta}_3 H'^3 + \hat{\beta}_4 H'^4 + \hat{\beta}_5 H'^5 + \hat{\beta}_6 H'^6\right)^2 \mathrm{d}h$$

One of the goals of the study is to illustrate the effects of using a simple approximation to the true volume. To meet this goal, the volume was approximated by a right circular cone as suggested by Robertson and Bowser (1999). The volume of this cone is given by $V^{\text{cone}} = \pi d_{\text{stump}}^2 H/12$, where d_{stump} is the diameter of the log at the stump height.

Once the set of trees was constructed, the next step was to arrange them as pieces of downed CWD within a forest stand. A series of populations was created with each population being a square with total area $|A| = 1.96$ ha. Each downed log was given a random orientation ϕ between 0 and $\pi/2$. Trees where randomly reflected about the x and y axes so that all angles of rotation from 0 to 2π rad would be possible. Each log was then randomly located within A in accordance with a uniform distribution. One trait of downed CWD that will influence the performance of the estimators, particularly degenerate LIS, is the orientation of the logs. In steep terrain and areas with high winds, the orientation of the logs is not likely to be random. To address this issue, the distribution of the ϕ angle was varied. The first data set, referred to as RAND, was created using a completely random orientation, with the distribution of ϕ being $\phi_{\text{uni}} \sim \text{uniform}(0, \pi/2)$. The second and third data sets were generated so that the orientation of the logs would mimic a consistent north–south and east–west pattern in their distribution. The angle of orientation for the east–west data sets was calculated using $\phi = (1 - b)\phi_{\text{uni}} + b\phi_{\pi/10}$, where $\phi_{\pi/10} \sim \text{uniform}(0, \pi/10)$ and $b \sim \text{Bernoulli}(0.6)$. If this dis-

©2003 NRC Canada

tribution is used, roughly 80% of the logs are oriented within $2\pi/10$ rad (36°) of the x axis, which is considered the direction of east–west orientation. The north–south orientation data set was created using a similar distribution, with the difference being that the orientation of the logs is with respect to the y axis. These two data sets will be referred to as NorS and EasW, respectively. Figures 8*a* and 8*b* shows the distribution of the size and orientation of logs in the NorS and RAND data sets, respectively.

An important factor in understanding the efficiency of each sampling technique is the relationship between the inclusion probability (π) and the variable of interest (z), with a high degree of correlation usually indicating a smaller variance. The correlation coefficient, ρ, between z and π for PDS, PRS, and DRS was $\rho = 1.0, 0.79, 0.97$, respectively. The ρ values for LIS varied with the log orientation of each data set and were $\rho = 0.04, 0.16, 0.41$ for the EasW, RAND, and NorS data sets, respectively. The correlations reported here for PRS fall within the range of previously reported values in the northeastern U.S. and Sweden (Gove et al. 2001; Ringvall et al. 2001). Figure 9 shows the relationship between z and π for the NorS data set. The perfectly linear relationship between z and π can be seen for PDS. However, the most interesting feature is the very strong linear relation between z and π for DRS. This appears to be a peculiarity of this data set and is not expected to hold for other species or situations where some logs are more heavily decayed.

Simulation study

Rather than use a Monte Carlo simulation, the bias and variance results were determined by calculating the appropriate expected values of each estimator using the results in Williams (2001). The bias and variance for a sample of size $m = 1$ is derived by approximating the integrals in eqs. A.2 and A.3 (in the Appendix) with a Riemann sum using a very fine grid spacing over A. The grid spacing used was 0.2 m (7.8 in.).

The method of edge-correction implemented in this study was to set the area of the population A to be such that the inclusion zone for every log fell completely within A (Ducey et al. 2003 and references therein). This method is known to increase the variance of the estimators over the alternative edge-correction methods, such as the reflection method proposed for LIS (Gregoire and Monkevich 1994). One side-effect of using this approach is the differences in the variance of the four methods may have been more dramatic if an alternative edge-correction strategy were used. However, it should be noted that it is not our intention to over- or under-state the performance of any one of the methods.

In the field, pieces of CWD would be selected using very different measurement techniques, and the amount of time required to draw a sample will vary depending on factors such as size of the logs, terrain, height and density of the understory, and the instrumentation used. Thus, a direct comparison is not possible. Because these factors cannot be realistically mimicked in a simulation study, the method of "equalizing" the four techniques was to equalize the expected number of pieces of CWD sampled at each point. This was done by first choosing an η value for PRS and then setting parameters of the other methods so that the expected number of logs ($E[n] = \sum_{i=1}^{N} \pi_i$) tallied at each (x, y) coordinate within A was the same for all methods. This is equivalent to setting the average inclusion zone to be the same for each method, though the minimum and maximum inclusion zones differ greatly among the methods.

An important assumption for this study is that all measurements of length, diameter, and cross-sectional area are made without error. Thus, given the assumption that no measurement error exists in any variable, each of the estimators is design-unbiased, with the only statistic of interest being the variance of the estimators. The study variables were the number of pieces ($\hat{Z}(N)_*$) and the total volume ($\hat{Z}(V)_*$) of CWD, with $*$ = LIS, PDS, PRS, DRS denoting the sampling technique used. The variances $V[\hat{Z}(N)_*]$ and $V[\hat{Z}(V)_*]$ are reported for each method. To facilitate the comparison between the existing methods and PDS, the relative efficiency

$$\mathrm{RE}(V) = \frac{\sqrt{V[\hat{Z}(V)_*]}}{\sqrt{V[\hat{Z}(V)_{\mathrm{PDS}}]}}$$

was used to express how many times larger the standard error of the other methods was when compared with PDS. The relative efficiency for $\hat{Z}(N)$ is defined analogously. An advantage of using RE to compare estimators is that the number of points required to achieve equal variance with each of the existing techniques, denoted by m_{EV}, is

$$m_{\mathrm{EV}} = m\mathrm{RE}^2$$

To illustrate the effects of estimating the volume of each piece of CWD using a simple approximation, the simulation was also run where the volume of each piece was approximated using the truncated cone method suggested by Robertson and Bowser (1999). The bias is express as a percentage using

$$B_* = 100\frac{\hat{Z}(V)_*}{\sum_{i=1}^{N} V_i^{\mathrm{cone}}}$$

where $*$ = LIS, PRS, and DRS. Because log volume does not appear in the PDS estimator of volume (eq. 3), the cone approximation is not relevant.

Results

The results for the simulation study are given in Table 1.

One disconcerting results is the bias (>26%) in the estimators of CWD volume when the volume is approximated by a cone. While these results cannot be generalized to other populations, it is probably safe to assume that situations exist where the bias in CWD volume estimators is quite large when volumes are estimated from assumed models (e.g., taper function, Newton's or Smalian's formula).

As expected, the PDS estimator of volume consistently has the smallest variance across all three data sets. One somewhat surprising result is how competitive both PRS and DRS are in terms of variance, with the difference in relative efficiency being only 1.02 to 1.07. Thus, it can be concluded that the random sample size, $n(x, y)$, at each point accounts for most of

©2003 NRC Canada

Fig. 8. Log orientations for the (*a*) NorS and (*b*) RAND data sets.

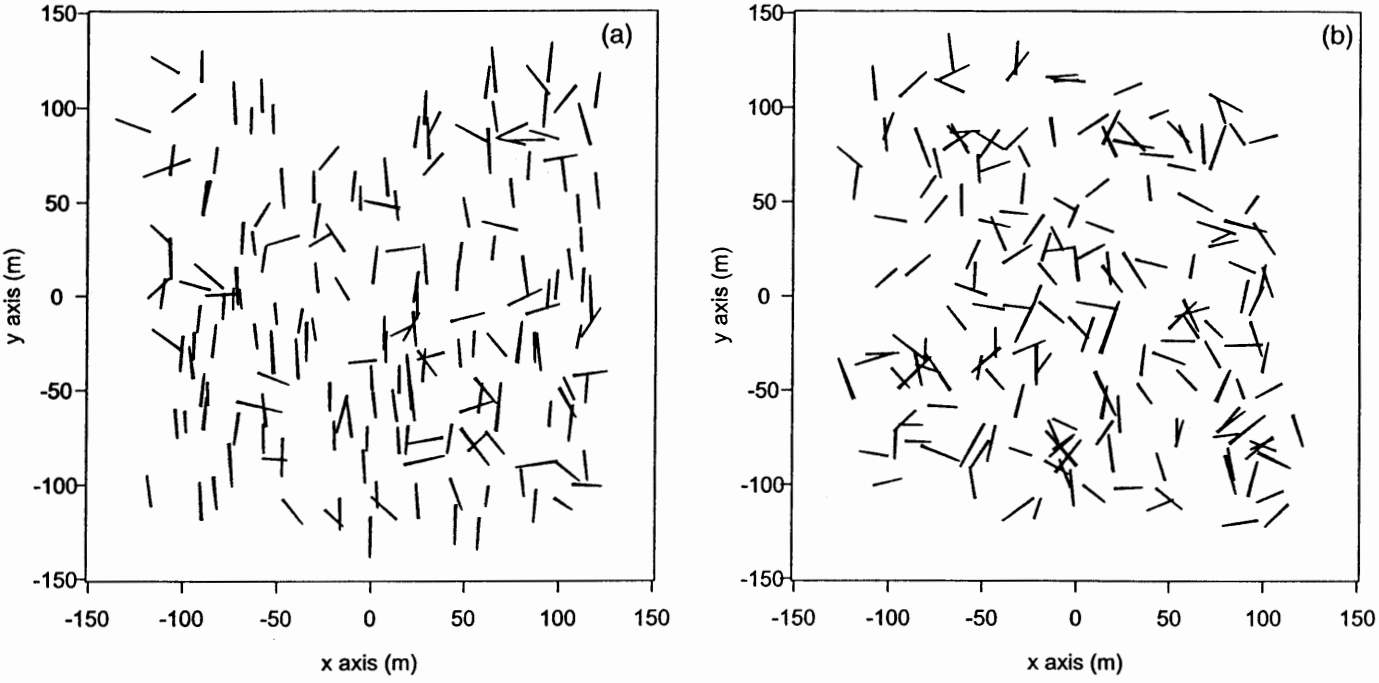

Fig. 9. Log volume versus the inclusion probability for each method.

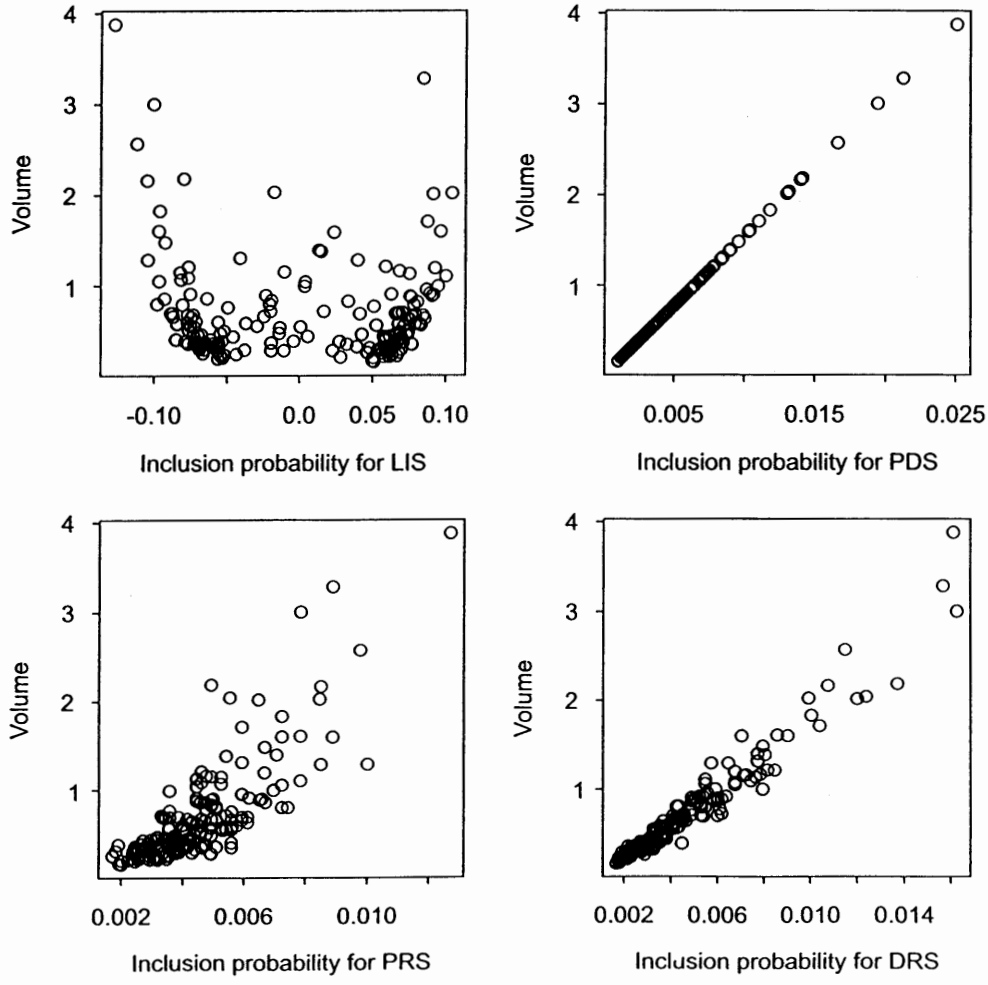

©2003 NRC Canada

the variance in the PRS and DRS estimators for these data sets. However, one should remember that the correlation between the volume of each log and the inclusion probabilities for DRS is probably higher than would be encountered in many situations. When estimating the number of logs, PRS and DRS are clearly more efficient than PDS, with the RE ranging from 0.94 to 0.98, with PRS always the most efficient estimator for this variable.

The variance of LIS is larger than that of the other methods in every situation except for estimating the number of logs for the NorS data, where LIS has a marginally smaller variance than PDS. The performance of degenerate LIS when estimating CWD volume is especially poor. LIS requires 1.3–2.9 times more lines than PDS to achieve the same variance. Comparing LIS to PRS, which is the next least efficient estimator, shows that even in this situation PRS is substantially more efficient, as 1.17–2.6 times as many lines would be required to achieve equal variance. These results are in line with those reported by Pickford and Hazard (1978), who note that LIS "...requires considerable sampling effort to satisfy a high level of precision even under ideal conditions." Another interesting feature of Table 1 is the bias for LIS. This result appears to be an error because all of the estimators are design-unbiased. However, this result occurs because the integral in eq. A.2 is approximated by a Riemann sum. This bias is due to the grid approximation of the inclusion zone and will occur whenever the orientation of the log and line only differ by a small amount, with small being about 2° to 4° in this study. When this situation occurs, the inclusion zone and the resulting inclusion probability are very small, while the log volume may actually be quite large. Whenever one of these logs is selected into the sample, the slightest error in measuring the inclusion zone can result in an extremely large overestimate of the true $\hat{Z}_{\mathrm{LIS}}$ value. Thus, even a small error in approximating the inclusion probability has a dramatic impact on the performance of the estimator. While decreasing the grid spacing always reduced the bias, it could not be made small enough to eliminate the bias using available workstation and software technology.[2] While computing problems are of interest, the more important point is that the same problems exist in a field application of degenerate LIS, where the assumption that logs are straight and can be accurately measured may not always apply. Thus, a measurement error of only 1° or 2° in determining the orientation of a log can badly bias the estimator whenever the orientation of the log and line are similar. To illustrate a worst case scenario, use the population means of $H = 17.8$ m and $V = 0.7$ m^3, a line length of $L = 10$ m, assume $n(x, y) = 1$, and suppose the actual orientation of the log is $\phi = 2°$ (0.035 rad), but the measured orientation is only $\phi = 1°$ (0.017 rad). The resulting estimates are $\hat{Z}_{\mathrm{LIS}} = 1101.3$ and 2202.3 for $\phi = 2°$ and 1°, respectively. Thus, a measurement error of 1° doubles the estimate of the population total. Also note that the true population total is only 127.8 m^3, so the difference between the two estimates is roughly 8.6 times larger than the population total. Granted, the inclusion probability for such logs is small, so outrageous estimates such as these are likely to be rare. However, given the number of samples in a large-scale inventory, such as the Forest Inventory Analysis, this problem is very likely to occur.

To better understand the performance of LIS, the data sets were revised so that no log orientation angle ϕ was allowed to be within 0.07 rad (4°) of the x axis. This was done to put a lower bound on the amount of error that could occur in the approximation of the inclusion zone for LIS. The results are shown in Table 2, where it can be seen that both the bias and variance are reduced, though the variance is substantially larger than that of the competing methods. This result shows how sensitive degenerate LIS is to log orientation. An important point is that the other methods are essentially unaffected by log orientation, and the simulation still produced very consistent results for PDS, PRS, and DRS using a grid spacing that is 5 to 10 times coarser than that used to produce reasonable results from the LIS estimator. This suggests that PDS, PRS, and DRS will be much more robust to measurement errors than this variant of LIS.

Discussion

As with any forest sampling method, there are a number of additional issues that must be addressed before it can be applied in the field. The following discussion addresses some of these issues and additional research is currently being performed.

Boundary correction

The boundary reflection method (Gove et al. 1999) may be used in the situation when a portion of the log's inclusion zone lies across the population boundary. Simply, in the boundary reflection method, the population boundary is reflected about each log that is tallied as "in" on a PDS point (Fig. 10). Boundary reflection for PDS can be shown to be unbiased in all practical cases; the proof mirrors that given for PRS (Gove et al. 1999). Geometrically, the proof is trivial. Figure 10 shows a simple example where the total inclusion area a_1 is equal to $O_1' + O_2 + O_3 + O_4$. Here, area O_3 is that portion of the inclusion area that lies outside the population boundary. When the boundary is reflected about the log, its reflected area, O_4, is exactly equivalent to that of O_3 and lands perfectly within the original inclusion area a_1. In addition, the remaining portions O_1' and O_2 are equivalent by symmetry, thus completing the geometric proof. It is important to recall that boundary reflection is object centric and is applied to each tallied piece of CWD when a sample point falls near the population boundary. Operationally, therefore, the boundary reflection method might become somewhat tedious in situations where there are many logs tallied on a given point, or when the boundary is not approximated by a straight line. In such cases, an alternative field implementation of the boundary reflection method, termed "walkthrough" (Ducey et al. 2003), may be used in the field. With this method, even curved and irregular boundaries can be handled with relative ease. Since the walkthrough is simply a field implementation of boundary reflection, the underlying theory is the same. Referring again to Fig. 10, two scenarios are possible in this case for the walkthrough under PDS. If the sample point falls in zone O_2, then the log is always tallied once, because the point falls between the log and the boundary and no reflection is necessary. The other possibility is for the point to land either in zone O_1' or O_4. In walkthrough, because

[2] Each simulation consumed was approximately 70 h using R on a Linux-based dual Athlon 1.2 GHz computer. Simulation time and memory requirements increase exponentially with decreasing grid spacing.

©2003 NRC Canada

Table 1. Simulation results for estimating the volume of downed CWD and number of logs.

	CWD volume (m^3)				Number of logs			
Data set	LIS	PDS	PRS	DRS	LIS	PDS	PRS	DRS
EasW								
B_{cone}	132.6	na	126.0	126.0				
B_{sim}	105.7	99.7	99.9	99.9	104.7	99.7	99.9	99.9
SE	391.1	229.8	241.4	234.6	474.2	371.9	356.8	365.4
RE	1.70	1.00	1.05	1.02	1.27	1.00	0.96	0.98
NorS								
B_{cone}	127.1	na	126.1	126.1				
B_{sim}	100.7	99.8	99.9	99.9	100.8	99.8	99.9	99.8
SE	256.8	225.5	235.7	230.0	366.4	367.8	346.5	354.0
RE	1.14	1.00	1.04	1.02	1.00	1.00	0.94	0.96
RAND								
B_{cone}	128.7	na	126.1	126.0				
B_{sim}	101.9	99.8	99.9	99.8	102.1	99.7	99.9	99.9
SE	332.1	246.6	263.9	254.3	443.3	389.4	372.7	379.4
RE	1.35	1.00	1.07	1.03	1.14	1.00	0.96	0.97

Note: Two types of bias are given. The first is the bias due to approximating the volume using a cone (B_{cone}). The second is the simulation bias due to the approximated integral (B_{sim}). The standard errors (SE) and relative efficiency (RE) for each CWD sampling technique are listed below the bias results. LIS, line intercept sampling; PDS, perpendicular distance sampling; PRS, point relascope sampling; DRS, diameter relascope sampling.

Table 2. Simulation results for estimating the volume of downed CWD and number of logs.

	CWD volume (m^3)				Number of logs			
Data set	LIS	PDS	PRS	DRS	LIS	PDS	PRS	DRS
EasW								
B_{cone}	129.9	na	125.2	125.2				
B_{sim}	103.0	99.7	99.7	99.7	103.1	99.7	99.9	99.8
SE	304.5	229.3	240.6	234.6	405.0	370.9	356.9	364.6
RE	1.33	1.00	1.05	1.02	1.09	1.00	0.96	0.98
NorS								
B_{cone}	125.6	na	126.0	126.0				
B_{sim}	101.1	99.4	99.7	99.7	99.4	99.8	99.8	99.8
SE	252.2	225.7	236.0	230.3	355.9	361.1	346.8	354.3
RE	1.11	1.00	1.04	1.02	0.97	1.00	0.94	0.96
RAND								
B_{cone}	128.8	na	125.9	126.0				
B_{sim}	102.0	99.6	99.7	99.7	102.2	99.6	99.7	99.7
SE	314.3	246.4	263.7	254.1	412.5	389.2	372.5	379.3
RE	1.26	1.00	1.07	1.03	1.05	1.00	0.96	0.97

Note: All data sets were modified so the orientation of the log and line never differed by less than 0.035 rad (2°). Two types of bias are given. The first is the bias due to approximating the volume using a cone (B_{cone}). The second is the simulation bias due to the approximated integral (B_{sim}). The standard errors (SE) and relative efficiency (RE) for each CWD sampling technique are listed below the bias results. LIS, line intercept sampling; PDS, perpendicular distance sampling; PRS, point relascope sampling; DRS, diameter relascope sampling.

the boundary has not been physically reflected, we handle this situation as one zone, $O_1 = O_1' + O_4$, i.e., any point where the log is tallied, but where the log is between the observer and the boundary. To implement the walkthrough, proceed as follows. Measure (pacing may be good enough in most cases unless the log is close to borderline) the distance from the sample point perpendicularly to the center axis of the log ($|pd|$). Now continue (walkthrough) along the same path towards the boundary for the exact same distance. If you cross the boundary before finishing the offset leg, the log is tallied again (twice in total); if you finish within the population boundary, the log is only tallied once. With a little imagination, it should be clear that curved or piecewise-linear boundaries can be handled without bias using the boundary reflection (walkthrough) method. This is proven for PRS, and fixed-area plots of different shapes by Ducey et al. (2003) and their proof extends to PDS as well.

Sampling multistemmed trees

To this point, the study has only addressed the performance of PDS in the context of single-stemmed logs, when in many

©2003 NRC Canada

Fig. 10. Example of the boundary reflection method as applied to perpendicular distance sampling. The inclusion zone (- — -) is shown to intersect the tract boundary (—) leaving area O_3 outside the tract. The reflected boundary (- - -) produces area O_4 when reflected about the log. Points landing in O_1' or O_2 tally the log once; those landing in O_4 tally it twice (see text for details).

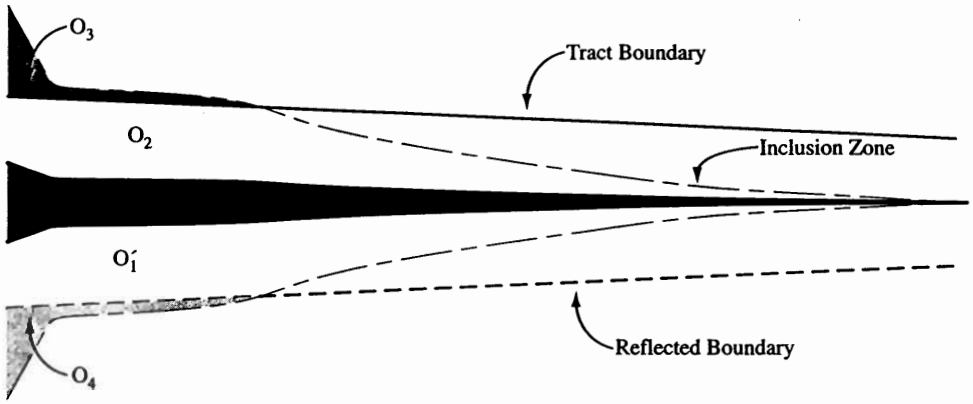

situations logs are multistemmed. This issue has been addressed by Gove et al. (2002) for PRS by employing randomized branch sampling to subsample the log. This is also a situation where the use of random-orientation LIS would be advantageous.

The solution for PDS is straightforward and views a multistemmed log as a collection of individual stems. Some concerns about this approach are determining consistent rules for proportioning volume to each stem at the location where the fork occurs and the difficulty of determining cross-sectional area at the fork. However, it should be noted that none of the methods are particularly adept at handling this situation.

Curved logs

For PDS, it is assumed that each log is straight for the inclusion area to be proportional to the volume of the log. If the log is curved, then a design bias will occur in the PDS estimator given in eq. 3. We expect this bias to be small provided the logs have a relatively small degree of curvature. One solution for minimizing the bias caused by a log with a high degree of curvature would be to approximate the log as a collection of straight sections. The problem with this approach is that while it could decrease the bias, it would likely increase the variance of $\hat{Z}_{PDS}$ at a faster rate. Quantifying the degree of bias and testing alternative solutions is beyond the scope of this paper, but it is a topic that is currently being studied.

K_{PDS} guidelines

Preliminary field testing in the central and northeastern United States suggests that PDS is relatively simple to implement. In both situations, the fieldwork for PDS was implemented using readily available instrumentation (e.g., linear tape and calipers). One useful aid is a table of limiting distances as a function of log diameter. Tables 3 and 4 provide limiting distances, $|pd_{max}|$, as a function of log diameter in both metric and English units. These tables raise an important issue with PDS, which is that the search distance can be very large when the sample design is such that a large number of logs will be tallied at each point.

Table 3. Limiting distances for perpendicular distance sampling (PDS) with metric units using two different K_{PDS} values.

	Perpendicular distance, $\|pd_{max}\|$ (m)	
Log diameter, d (cm)	K_{PDS} = 500, volume factor = 10 m³/ha	K_{PDS} = 250, volume factor = 20 m³/ha
7.50	2.21	1.10
8.75	3.01	1.50
10.00	3.93	1.96
11.25	4.97	2.49
12.50	6.14	3.07
13.75	7.42	3.71
15.00	8.84	4.42
16.25	10.37	5.18
17.50	12.03	6.01
18.75	13.81	6.90
20.00	15.71	7.85
21.25	17.73	8.87
22.50	19.88	9.94
23.75	22.15	11.08
25.00	24.54	12.27
26.25	27.06	13.53
27.50	29.70	14.85
28.75	32.46	16.23
30.00	35.34	17.67
31.25	38.35	19.17
32.50	41.48	20.74
33.75	44.73	22.37
35.00	48.11	24.05
36.25	51.60	25.80
37.50	55.22	27.61
38.75	58.97	29.48
40.00	62.83	31.42

Note: Each K_{PDS} value has an associated volume factor expressed in cubic metres per hectare.

Conclusion

This study suggests that PDS is a viable solution for estimating down CWD volume. However, one of the most significant results of this study is to show the advantage of sampling with

©2003 NRC Canada

probability proportional to a study variable that is difficult to accurately measure. Thus, the greatest advantage that PDS has over other methods is that by sampling proportional to log volume, the actual measurement of log volume is avoided. Another potential application that exploits this advantage would be the estimation of the surface area of CWD, though it would require a different inclusion zone. While the amount of time required to assess the inclusion of borderline logs in the sample might be significantly longer than that of other methods, the additional time will probably be recovered because no additional measurements on the sample logs are required.

While PDS has many attractive features, it is not appropriate in every situation. For the estimation of CWD volume, it is hard to image how any of the alternative methods can compete in terms of mean square error, regardless of the time and effort expended taking detailed measurements on each log. However, it would not be wise to use PDS in a study where attributes other than volume are to be estimated. This is because acquiring the inclusion probability requires measuring the log volume, which would be very time consuming. While the inclusion probability could be approximated, every study variable could have a substantial bias due to errors in the approximated π's. In this situation, alternatives such as PRS and DRS would certainly be better in terms of overall efficiency (time and means square error of the estimators). When the goal of the survey is to estimate a wide range of attributes (e.g., size distributions, number of logs, volume, biomass), PRS might be slightly better than DRS because it is more efficient at estimating the number of logs, and the measurement (length) that is necessary for determining the inclusion probabilities might be more accurate than a measurement of diameter, girth, or cross-sectional area, especially on decay-deflated logs.

Even degenerate LIS, which has consistently been shown to have a higher variance for most attributes and would likely suffer from bias problems, has some advantages. For example, it is the easiest method to implement in situations where the understory vegetation is so thick that the candidate logs cannot be clearly seen. However, Ringvall and Stahl (1999) have demonstrated that logs can be missed using LIS, even though conventional wisdom would dictate otherwise. Forest conditions where this is a concern can be found on the western slopes of the Cascades in Oregon and Washington, but are rarer across the rest of the United States.

LIS where the orientation of the line is random at each point would not be affected by the same problems because the random orientation ensures that small inclusion zones are not paired with large log volumes. However, it might not be realistic to assume that an accurate measurement of the cross-sectional area can be performed in the amount of time allocated to CWD sampling in most large-scale inventories. One could assume that this cross-sectional area could be approximated by assuming a geometric solid, such as an ellipse, and determining the cross-sectional area of the vertical plane that intersected this solid. However, this would require a complex series of measurements, and results of Matern (1956, 1990) suggest that this type of approximation is problematic for the much simpler problem of estimating basal area.

While PDS, PRS, and DRS were surprisingly competitive in virtually every situation tested, degenerate LIS will be one of the least efficient methods for estimating any attribute associated with CWD. Some of the more serious concerns raised here with degenerate LIS can be addressed by using LIS with a random orientation or an L-shaped transect (see Gregoire and Valentine 2003). However, it is common to see Y or + shaped transects used in the estimation of CWD, whose statistical properties have never been derived nor tested. While this supposedly simplifies the data collection process, it also pairs the incorrect inclusion probability with the cross-sectional area measurement. The concern is that the bias and variance properties of the estimator associated with these hybrid methods is not known, and it is possible that the performance could be much worse than the results for degenerate LIS presented here, especially in situations where logs are not randomly oriented. Given that the time or cost savings associated with these hybrids, over an appropriate implementation of LIS, are probably nonexistent, we can see no valid reason for the continued use of these techniques. We conclude that LIS is a viable method of sampling CWD only under strict adherence to a well-established sampling strategy for LIS. The only remaining concern with LIS will be whether the measurements of cross-sectional area can be made and how robust these techniques are to measurement errors.

Table 4. Limiting distances for perpendicular distance sampling (PDS) with English units using two different K_{PDS} values.

Log diameter, d (in.)	Perpendicular distance, $\lvert pd_{max} \rvert$ (ft)	
	K_{PDS} = 435.6, volume factor = 50 ft^3/acre	K_{PDS} = 217.8, volume factor = 100 ft^3/acre
3.0	21.38	10.69
4.0	38.01	19.01
5.0	59.39	29.70
6.0	85.53	42.76
7.0	116.41	58.21
8.0	152.05	76.02
7.0	192.44	96.22
10.0	237.58	118.79
11.0	287.47	143.73
12.0	342.11	171.05
13.0	401.50	200.75
14.0	465.65	232.82
15.0	534.55	267.27
16.0	608.20	304.10
17.0	686.60	343.30
18.0	769.75	384.87
19.0	857.65	428.83
20.0	950.30	475.15
21.0	1047.71	523.86
22.0	1149.87	574.93
23.0	1256.78	628.39
24.0	1368.44	684.22
25.0	1484.85	742.43
26.0	1606.02	803.01
27.0	1731.93	865.97
28.0	1862.60	931.30
29.0	1998.02	999.01
30.0	2138.19	1069.09

Note: Each K_{PDS} value has an associated volume factor expressed in cubic feet per acre.

©2003 NRC Canada

Acknowledgements

The authors thank Drs. Mark J. Ducey and Kim Iles, in addition to an anonymous referee, for their valuable comments on the manuscript. We would also like to thank Drs. Daniel Bebber and Sean Thomas for the inspiration provided by their work on DRS and Don Martinez for the Ponderosa Pine data set.

References

Bebber, D.P., and Thomas, S.C. 2003. Prism sweeps for coarse woody debris. Can. J. For. Res. **33**. In press.

Biging, G.S., and Wensel, L.C. 1988. The effects of eccentricity on the estimation of basal area and basal area increment of coniferous trees. For. Sci. **34**: 621–633.

Brown, J.K. 1971. A planar intersect method for sampling fuel volume and surface area. For. Sci. **17**: 96–102.

de Vries, P.G. 1986. Sampling theory for forest inventory. Springer-Verlag, New York.

Ducey, M.J., Gove, J.H., and Valentine, H.T. 2003. A walkthrough solution to the boundary overlap problem. For Sci. In press.

Eriksson, M. 1995. Design based approaches to horizontal-point-sampling. For. Sci. **41**: 890–907.

Forest Inventory Analysis. 2002. Phase 3 field guide — downed woody debris and fuels. Avaialble from http://www.ncrs.fs.fed.us/4801/dwm/local-resources/documents/dwm-field-manual.pdf.

Furnival, G.M., Valentine, H.T., and Gregoire, T.G. 1986. Estimation of bole volume by importance sampling. Can. J. For. Res. **16**: 554–557.

Gertner, G.Z. 1990. The sensitivity of measurement error in stand volume estimation. Can. J. For. Res. **20**: 800–804.

Gove, J.H., Ringvall, A., Stahl, G., and Ducey, M.J. 1999. Point relascope sampling of downed coarse woody debris. Can. J. For. Res. **29**: 1718–1726.

Gove, J.H., Ducey, M.J., Stahl, G., and Ringvall, A. 2001. Point relascope sampling: a new way to assess downed coarse woody debris. J. For. **99**: 4–11.

Gove, J.H., Ducey, M.J., and Valentine, H.T. 2002. Multistage point relascope and randomized branch sampling for downed coarse woody debris estimation. For. Ecol. Manage. **155**: 153–162.

Gregoire, T.G. 1998. Design-based and model-based inference in survey sampling: appreciating the difference. Can. J. For. Res. **28**: 1429–1447.

Gregoire, T.G., and Monkevich, N.S. 1994. The reflection method of line intersect sampling to eliminate boundary bias. Environ. Ecol. Stat. **1**: 219–226.

Gregoire, T.G., and Valentine, H.T. 2003. Line intersect sampling: ell-shaped transects and multiple intersects. Environ. Ecol. Stat. **10**: 263–279.

Gregoire, T.G., Valentine, H.T., and Furnival, G.M. 1993. Estimation of bole surface area and bark volume with monte carlo methods. Biometrics, **49**: 653–660.

Gregoire, T.G., Schabenberger, O., and Kong, F. 2000. Prediction from an integrated regression model. Biometrics, **56**: 414–419.

Gertner, G.Z. 1990. The sensitivity of measurement error in stand volume estimation. Can. J. For. Res. **20**: 800–804.

Harmon, M.E., and Sexton, J. 1996. Guidelines for measurements of woody detritus in forest ecosystems. U.S. Long-Term Ecological Research Network Office, University of Washington, Seattle, Wash. Publ. 20.

Helms, J.A. 1998. The dictionary of forestry. CABI Publishing, Oxon, U.K.

Husch, B., Miller, C.I., and Beers, T.W. 1982. Forest mensuration 3rd ed. John Wiley and Sons, New York.

Iles, K. 1979. Systems for selecting truely random samples from tree populations and the extention of variable plot sampling to the third dimension. Ph.D. dissertation, The University of British Columbia, Vancouver, B.C.

Iles, K. 1990. Critical height sampling: a workshop on the current state of the technique. *In* Procedings of the IUFRO Symposium: State-of-the-Art Methodology of Forest Inventory, August 1989, Syracuse, N.Y. *Edited by* V.J. LeBau and T. Cunia. USDA For. Serv. Gen. Tech. Rep. PNW-GTR-263.

Kaiser, L. 1983. Unbiased estimation in line-intersect sampling. Biometrics, **39**: 965–976.

Kitamura, M. 1962. On an estimate of the volume of trees in a stand by the sum of critical heights. Kai Nichi Rin Ko, **73**: 64–67.

Mandallaz, D. 1993. Geospatial methods for double sampling schemes: applications to combined forest inventories. Chair of Forest Inventory and Planning, Swiss Federal Institute of Technology (ETH), Zurich.

Mandallaz, D., and Ye, R. 1999. Forest inventory with optimal two-phase, two-stage sampling schemes based on the anticipated variance. Can. J. For. Res. **29**: 1691–1708.

Matern, B. 1956. On the geometry of the cross-section of a stem. Medd. Statens Skogsforskningsinst. pp. 11, 28, 46.

Matern, B. 1990. On the shape of the cross-section of a tree stem. An empirical study of the geometry of mensurational methods. Swed. Univ. Agric. Sci. Sect. For. Biometry Rep. 28.

Max, T.A., and Burkhart, H.E. 1976. Segmented polynomial regression applied to taper equations. For. Sci. **22**: 283–289.

Pedlar, J.H., Pearce, J.L., Venier, L.A., and McKenney, D.W. 2002. Coarse woody debris in relation to disturbance and forest type in boreal Canada. For. Ecol. Manage. **158**: 189–194.

Pickford, S.G., and Hazard, J.W. 1978. Simulation studies on line intersect sampling of forest residue. For. Sci. **24**: 469–483.

Ringvall, A., and Stahl, G. 1999. field aspects of line intersect sampling for coarse woody debris. For. Ecol. Manage. **119**: 163–170.

Ringvall, A., Stahl, G., Teichmann, V., Gove, J.H., and Ducey, M.J. 2001. Two-phase approaches to point and transect relascope sampling of downed coarse woody debris. Can. J. For. Res. **31**: 971–977.

Robertson, P.A., and Bowser, Y.H. 1999. Coarse woody debris in mature *Pinus ponderosa* stands in Colorado. J. Torrey Bot. Soc. **126**: 255–267.

Schreuder, H.T., Gregoire, T.G., and Wood, G.B. 1993. Sampling methods for multiresource forest inventory. John Wiley and Sons, New York.

Shifley, S.R., and Schlesinger, B.L. 1994. Sampling guidelines for old-growth forest in the midwest, U.S.A. Nat. Areas J. **14**: 258–268.

Shifley, S.R., Brookshire, B.L., Larsen, D.R., and Herbeck, L.A. 1997. Snags and old down wood in Missouri old-growth and mature second-growth forests. North. J. Appl. For. **14**: 165–172.

Stahl, G. 1997. Transect relascope sampling for assessing coarse woody debris: The case of a $\pi/2$ relascope angle. Scand. J. For. Res. **12**: 375–381.

Stahl, G. 1998. Transect relascope sampling: A method for quantifying coarse woody debris. For. Sci. **44**: 58–63.

©2003 NRC Canada

Ueno, Y. 1979. A new method of estimating stand volume I. J. Jap. For. Soc. **61**: 346–348. [In Japanese.]

Ueno, Y. 1980. A new method of estimating stand volume II. J. Jap. For. Soc. **62**: 315–320. [In Japanese.]

Valentine, H.T., Gove, J.H., and Gregoire, T.G. 2001. Monte Carlo approaches to sampling forested tracts with lines or points. Can. J. For. Res. **31**: 1410–1424.

Warren, W.G., and Olsen, P.F. 1964. A line intersect technique for assessing logging waste. For. Sci. **10**: 267–276.

Wiant, H.V., Jr., Wood, G.B., and Williams, M. 1996. Comparison of three modern methods for estimating volume of sample trees using one or two diameter measurements. For. Ecol. Manage. **83**: 13–16.

Williams, M.S. 2001. New approach to areal sampling in ecological surveys. For. Ecol. Manage. **154**: 11–22.

Williams, M.S., and Wiant, H.V. 1998. Double sampling with importance sampling to eliminate bias in tree volume estimation of the centroid method. For. Ecol. Manage. **104**: 77–88.

Williams, M.S., Cormier, K.A., Martinez, D.L. and Briggs, R. 1999. An evaluation of the Barr and Stroud FP15 and Criterion 400 dendrometers for measuring upper stem diameters and heights. For. Sci. **45**: 53–61.

Wood, G.B., Wiant, H.V., Jr., Loy, R.J., and Miles, J.A. 1990. Centroid sampling: a variant of importance sampling for estimating the volume of sample trees of radiata pine. For. Ecol. Manage. **36**: 233–243.

Appendix A:

With the exception of the inclusion zones, the properties of all four estimators are identical in the context of survey sampling. As suggested by Gregoire (1998), a concise description of the properties of $\hat{Z}_*$, where $*$ denotes LIS, PDS, PRS, and DRS is as follows:

The area of interest is a two-dimensional plane, A, of area $|A|$, and the target parameters are total volume and number of pieces of downed CWD within A. Inference follows the design-based framework, which views the population as fixed. The only source of randomness is the selection of sampling locations (points), which are determined by generating the (x, y) coordinates of m independent sampling locations from a uniform distribution over A. Thus, the probability density function of the sample locations is $f(x, y) = 1/|A|$. At each location the logs selected by each of the sampling techniques are tallied. These data are then used to determine the total volume estimate of CWD at the point (x, y), denoted by

$$[A.1] \quad \hat{Z}_*(x, y) = |A| \sum_{i=1}^{n(x,y)} \frac{z_i}{a_i^*}$$

where $n(x, y)$ is the number of logs tallied at the point with coordinates (x, y), a_i^* is the area of the inclusion zone falling within A for log i and sampling technique $*$, and z_i is the parameter of interest. The infinite set of $\hat{Z}_*(x, y)$ values over A forms the reference set, with the reference distribution being the infinite set of all equally likely samples.

All of the estimators studied here are design-unbiased with the expected value of $\hat{Z}_*$ given by

$$\begin{aligned}[A.2] \quad E[\hat{Z}_*] &= \frac{1}{|A|} \int\int_A \hat{Z}_*(x, y)\mathrm{d}x\mathrm{d}y \\ &= \frac{1}{|A|} \sum_{i=1}^{N} \left(\frac{z_i|A|}{a_i^*}\right) a_i^* \\ &= \sum_{i=1}^{N} z_i \\ &= Z\end{aligned}$$

where N is the number of logs. The estimator of CWD using the m point samples is $\bar{Z}_* = 1/m \sum_{i=1}^{m} \hat{Z}_i$, where $\hat{Z}_i$ is the estimator for point i. The variance is given by

$$[A.3] \quad \mathrm{var}[\hat{Z}_*] = \frac{1}{|A|} \int\int_A [\hat{Z}_*(x, y) - Z]^2 \mathrm{d}x\mathrm{d}y$$

The sample-based variance estimator is derived from the observed variation among the m sample points. Thus, for the m randomly located points, the design-unbiased estimator of the variance is

$$[A.4] \quad \mathrm{var}[\hat{Z}_*] = \frac{1}{m(m-1)} \sum_{i=1}^{m} (\hat{Z}_i - \bar{Z}_*)^2$$

©2003 NRC Canada