U.S. DEPARTMENT OF AGRICULTURE
FOREST SERVICE
REGION ONE
DRAWINGS FOR PROPOSED FOREST DEVELOPMENT ROADS

TEMPLEMENTAL

IDAHO PANHANDLE NATIONAL FORESTS – BONNERS FERRY RANGER DISTRICT – BOUNDARY COUNTY, IDAHO

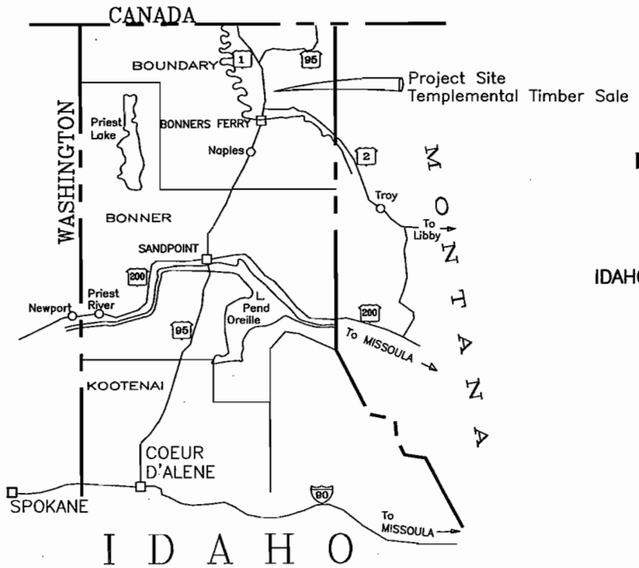

INDEX MAP

45 Miles

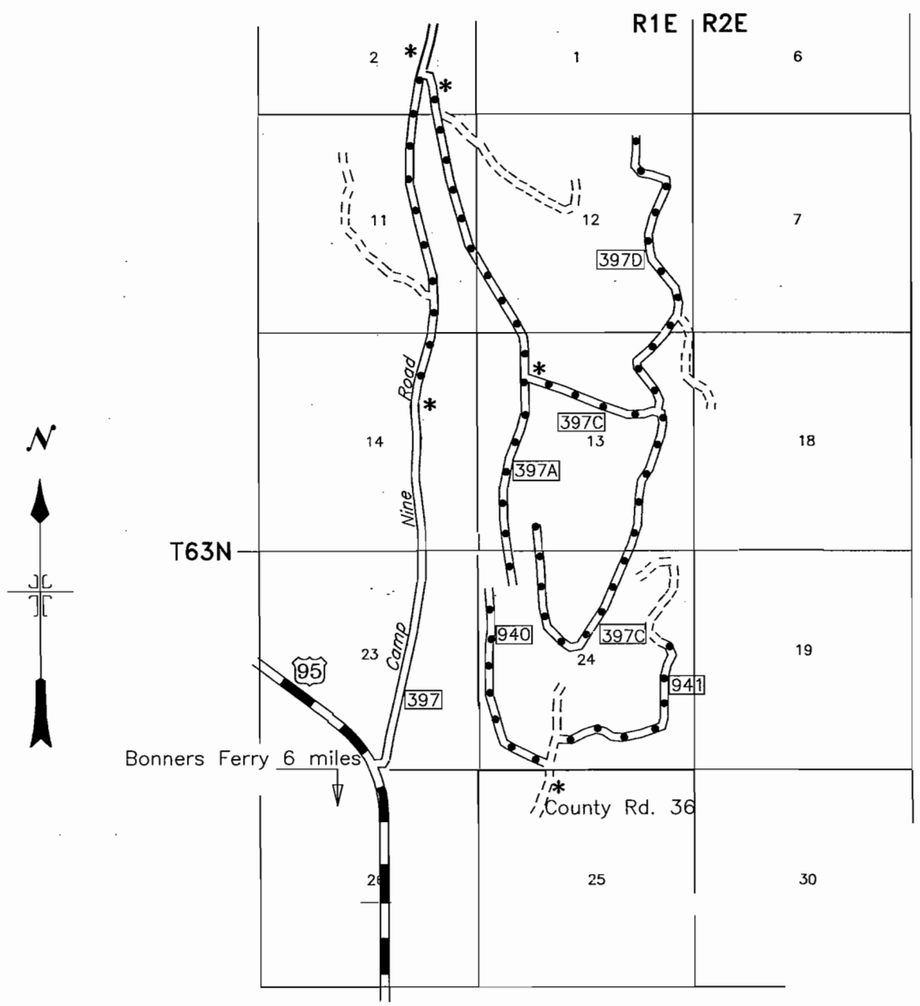

INDEX TO SHEETS

1	TITLE SHEET
2	ESTIMATE OF QUANTITIES
3	TYPICAL SECTION
4	LINE DIAGRAM RD. 397, 397A
5	LINE DIAGRAM RDS. 397C, 397D, 940, 941
6	CMP DETAILS
7-9	COUPLING BANDS

LEGEND:

Reconstruction

Existing Roads

* "Road Construction Ahead", 30" x 30" sign
Place at beginning of any construction activities
Traffic Control signs shall conform to the "Manual of Uniform Traffic Control Devices"

VICINITY MAP

SCALE: ONE SECTION EQUALS ONE SQUARE MILE

The following certify that this project is in conformance with environmental assessment requirements.

Recommended and certified to be technically correct

Project Team Leader for Dallas Thomson

Approved and certified to be in conformance with sound engineering practice for safety, structural integrity, and operational requirements.

Forest Engineer

Approved:

District Ranger 5/21/08 Date

ESTIMATE OF QUANTITIES

ROAD NUMBERS				397	397A	397C	397D	940	941	TOTAL		
PROJECT LENGTH (mi)				1.45	2.50	2.50	1.82	0.88	1.00	10.15		
ITEM NO.	DESCRIPTION	METHOD OF MEASURE	UNIT	QUANTITIES								
201(05)	Individual Removal/trees, small: Slash Treatment: T&L 11, Logs; 11, UOT 1	AQ	Ea	---	37	65	---	---	---	102		
201A(01)	Roadway Brushing	DQ	Mi	1.45	---	---	---	0.88	1.00	3.33		
203(09)	Excavation, Placement Method 1	LSQ	LS	---	---	1	---	1	---	2		
203(19)	Drainage Excavation, Type Flat-Bottomed Ditch	DQ	LF	---	100	---	---	---	---	100		
203(20)	Drainage Excavation, Type Rolling Dip	AQ	EA	---	---	1	---	---	---	1		
304(11)1	Crushed Aggregate, Type Surface, Grading D, Compaction B **(Commercial Source)**	AQ	Ton	---	2731	1246	509	---	---	4486		
304(11)2	Crushed Aggregate, Type Base, Grading N, Compaction B **(Commercial Source)**	AQ	Ton	---	272	185	---	---	---	457		
306(01)	Reconditioning of Roadbed, Compaction A	DQ	Mi	1.20	2.50	2.50	1.82	0.88	1.00	9.90		
601(01)	Mobilization	LSQ	LS	1	1	1	1	1	1	6		
603(01)	18" CMP (Incl Culv Exc) Thick: .064 Steel, .060 Al, Method C	AQ	LF	---	60	212	---	---	---	272		
603(01)	24" CMP (Incl Culv Exc) Thick: .064 Steel, .060 Al, Method C	AQ	LF	---	---	---	30	---	---	30		

U.S. DEPARTMENT OF AGRICULTURE
FOREST SERVICE
R-1
NORTHERN REGION

Drawn Hawkes
Design
Checked
Reviewed

Forest
Idaho Panhandle
Project Name
TEMPLEMENTAL T.S.

Sheet Title
Est of Quantities
Sheet 2 of 9

NOTES:

1. Item 304(11)2: Grading N is 100% passing the 3 inch, 1. 15% to 45% passing the number 4 sieve. No other grading requirements.
2. Construct roads to Tolerance Class I.
3. Section 203.06 & 306.02, Excess, oversize or unsuitable material shall be sidecast. Excess material from the flat-bottomed ditch shall be spread evenly along the fill slope of Rd. 397A.
4. Additional aggregate width for curve widening or turnouts not required.
5. Section 304 & 106: Certified scale weights and manufacturer's certification for gradation shall be required for every truckload.
6. Blade & shape existing or natural turnouts identified by the Engineer at approx. 1000 ft. intervals. Incidental to Item 306(01).
7. Item 201(05) – Clearing slash shall be hauled not more than 1000' and not less than 500' and piled along the roadway. Merchantable trees in cutting units shall be treated in accordance with Section 201.03 (b)(1).
8. Section 306.02: Blend marked intersections for a distance of 50 feet.

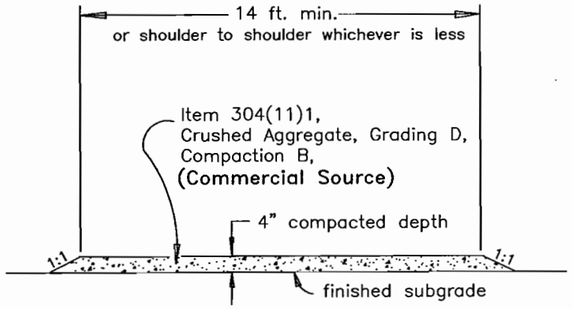

Typical Crushed Aggregate Section

Where shown sheets 4 & 5

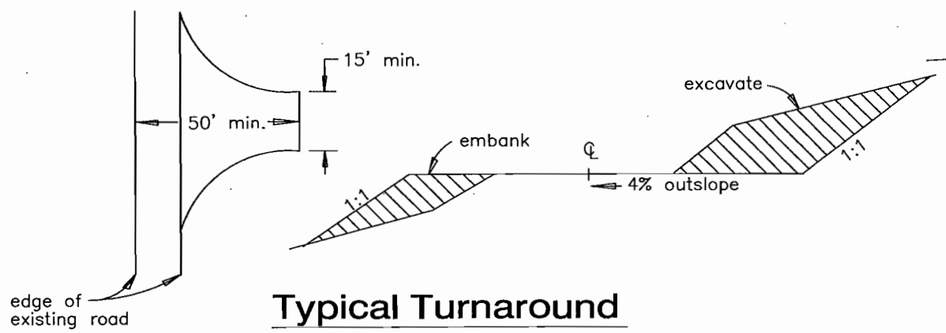

Typical Turnaround

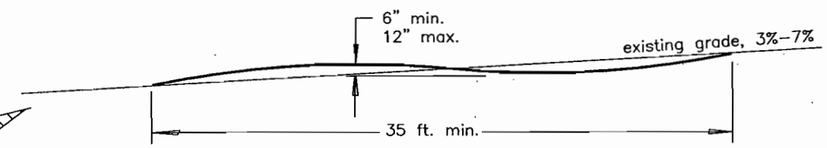

TYPICAL DIP

Item 203(20)

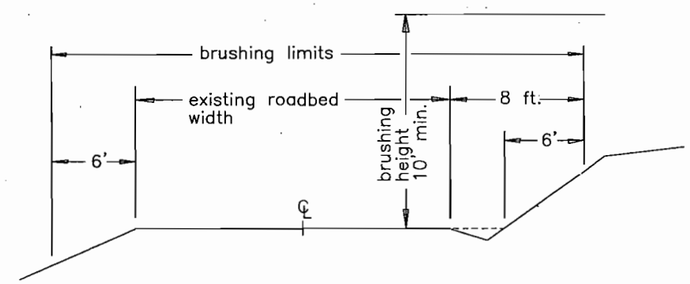

Typical Brushing Section

Item 201A(01)

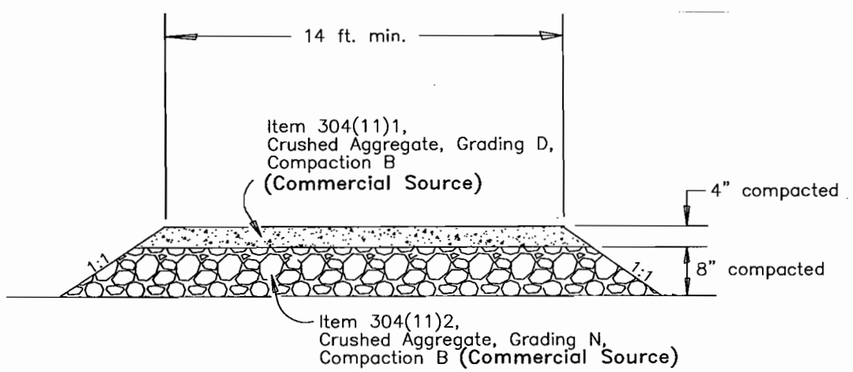

Typical Section

Rd. 397A and 397C

See sheets 4 & 5 for locations

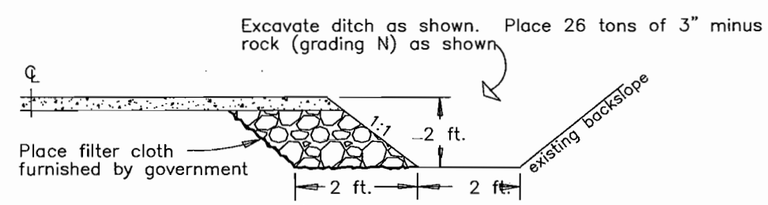

Typical Flat-Bottomed Ditch Section

Item 203(19) 26 tons, Rd. 397A, MP 0.0

No Scale

U.S. DEPARTMENT OF AGRICULTURE
FOREST SERVICE
R-1
NORTHERN REGION

Drawn Hawkes
Design
Checked
Reviewed

Forest Idaho Panhandle
Project Name TEMPLEMENTAL T.S.

Sheet Title TYPICAL SECTION
Sheet 3 of 9

Rd. 397

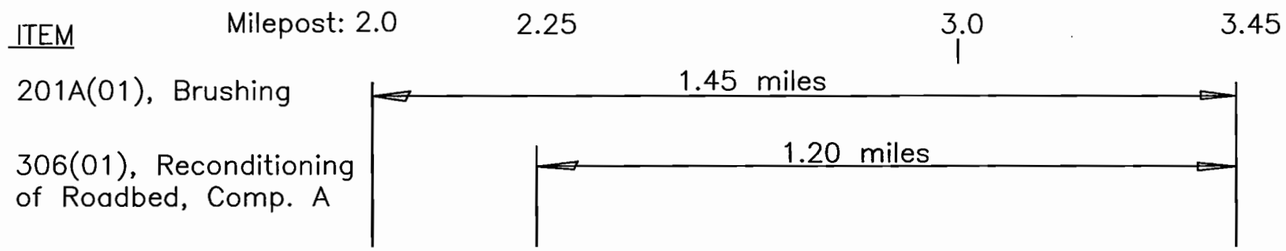

Rd. 397A

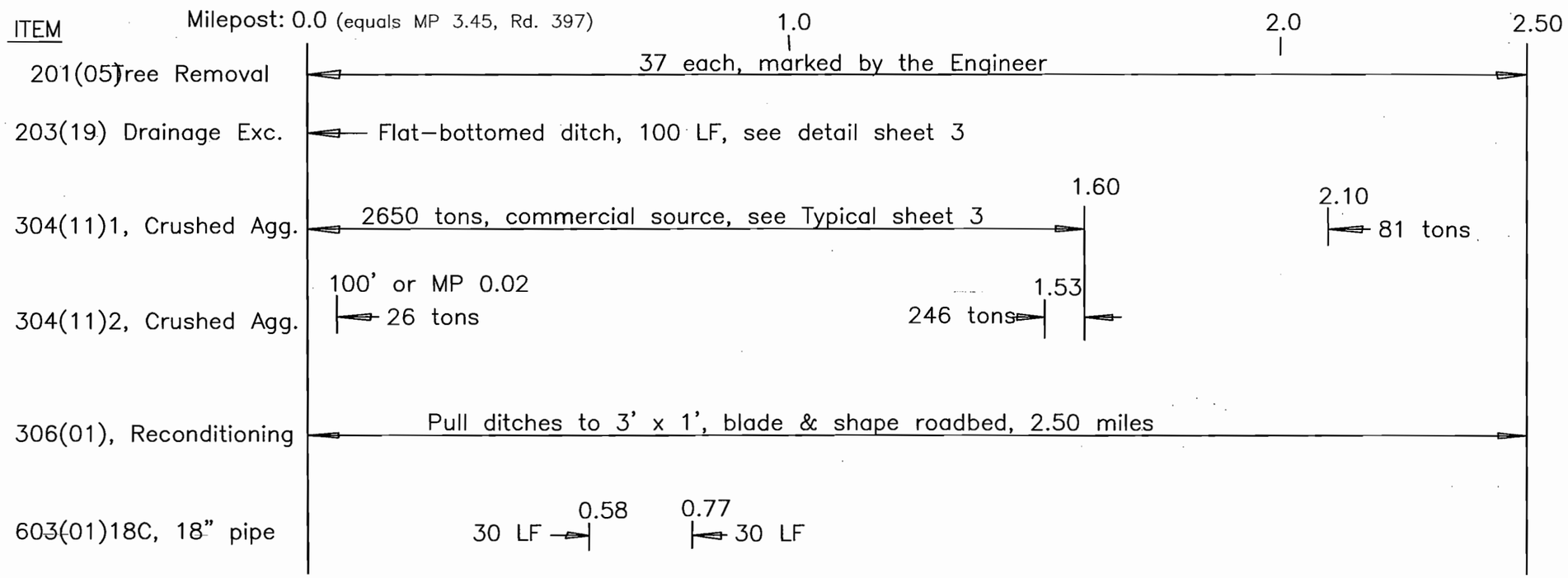

U.S. DEPARTMENT OF AGRICULTURE
FOREST SERVICE
R-1
NORTHERN REGION

Drawn Hawkes
Design
Checked
Reviewed

Forest: Idaho Panhandle
Project Name: TEMPLEMENTAL T.S.

Sheet Title: Line Diagram 1
Sheet 4 of 9

Rd. 397C

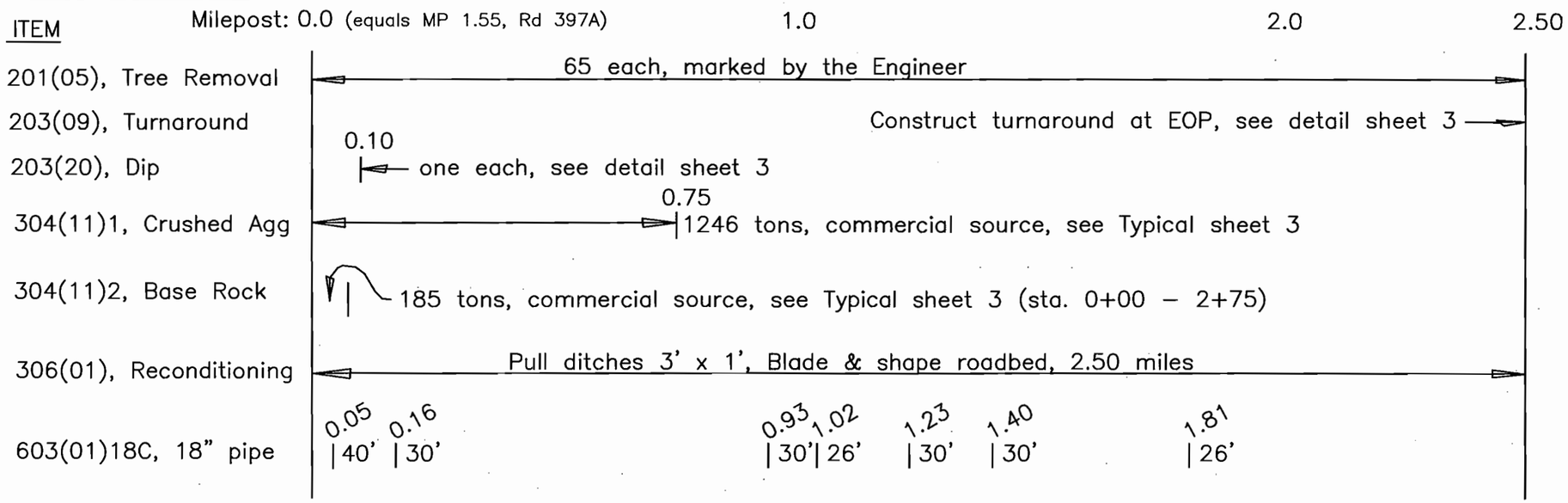

Rd. 397D

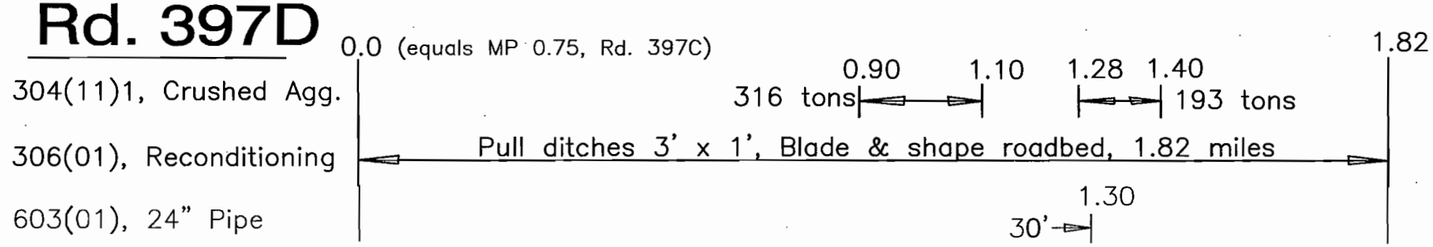

Rd. 940

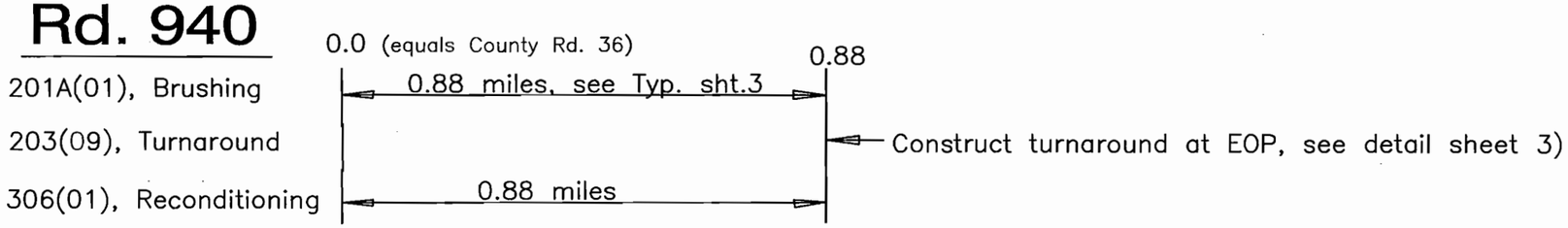

Rd. 941

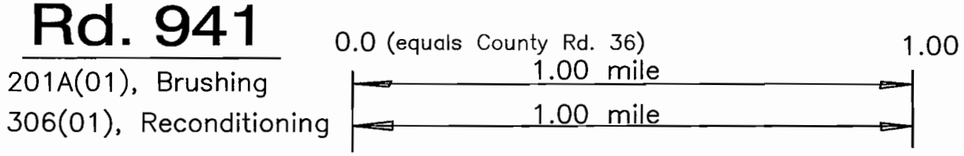

U.S. DEPARTMENT OF AGRICULTURE
FOREST SERVICE
R-1
NORTHERN REGION

Drawn Hawkes
Design
Checked
Reviewed

Forest: Idaho Panhandle
Project Name: TEMPLEMENTAL T.S.

Sheet Title: Line Diagram 2
Sheet 5 of 9

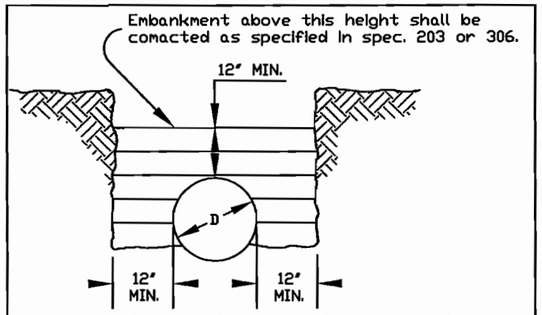

Maximum 6-inch compacted layers to density called for in the specifications. Bedding shall be suitable material uniformly compacted and shaped to fit the bottom of the pipe.

METAL THICKNESS AND GAGE TABLES			
Steel		Aluminum	Approx. Gage
Zinc Coated	Un-Coated		
Metal Thickness in Inches			
0.064	0.0598	0.060	16
0.079	0.0747	0.075	14
0.109	0.1046	0.105	12
0.138	0.1345	0.135	10
0.168	0.1644	0.164	8
0.188	0.1838		7
0.218	0.2145		5
0.249	0.2451		3
0.280	0.2758		1

GENERAL NOTES:

TREATMENT OF DAMAGED SPELTER: The damaged or corroded ends of metal pipe to be extended shall be removed. If the damaged end is flame cut, the burned spelter on the galvanized pipe shall be wire brushed to clean metal and the area shall be painted with two coats of paint, high in zinc content, for repair of the galvanized surfaces.

SETTLEMENT AND CAMBER: Pipes shall be cambered as necessary to compensate for any anticipated settlement in the foundation or bed. Camber shall be on a parabolic curve with no point along the invert being higher than the invert at the inlet.

EMBANKMENT AND FOUNDATION SOIL CONDITION
Existing Fills, Regardless of Foundation Soils

CAMBER
1% of pipe length, not to exceed 3/4 of pipe span.

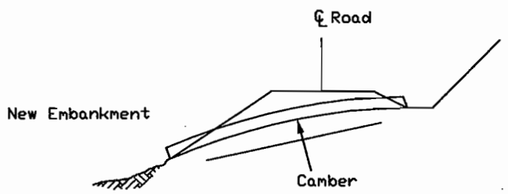

1% of pipe length, not to exceed 3/4 of pipe span or as determined by the engineer.

TYPICAL INSTALLATION IN EMBANKMENT

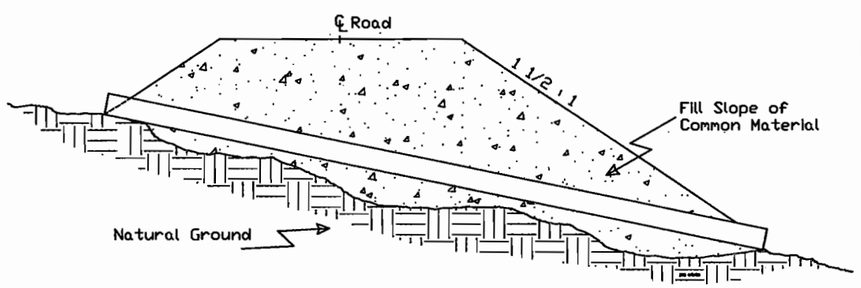

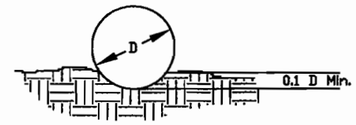

TYPICAL BEDDING MATERIAL

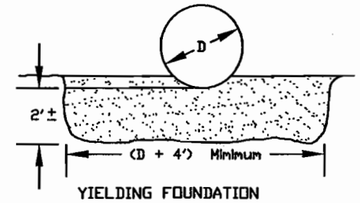

YIELDING FOUNDATION

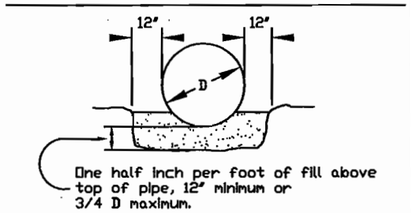

ROCK FOUNDATION

Embankment above this height shall be compacted as specified in Spec. 203 or 306.

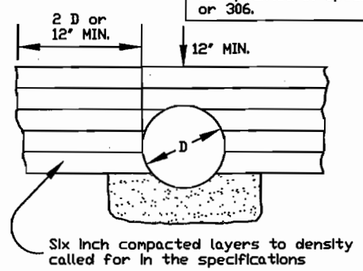

TYPICAL BACKFILL DETAIL

Bedding shall be suitable material uniformly compacted and shaped to fit the bottom of the pipe

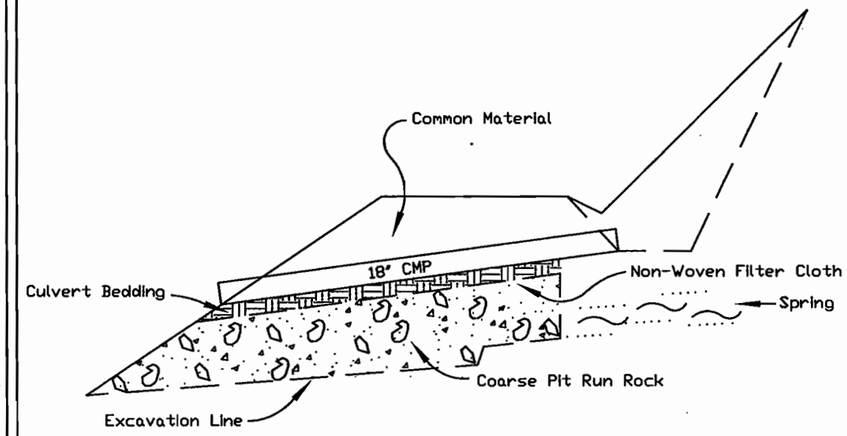

UNDERDRAIN TYPICAL SECTION

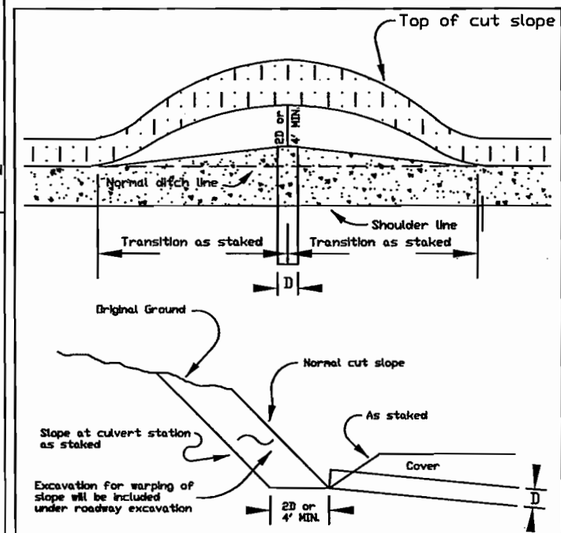

TREATMENT OF CUT SLOPE AT CULVERT INLET

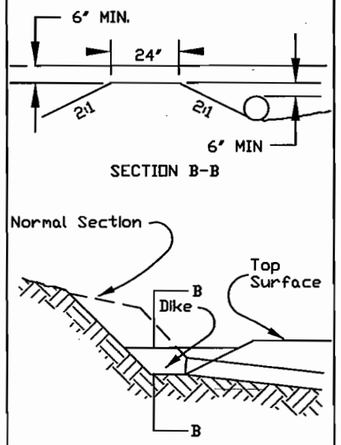

SECTION B-B

DITCH DIKE

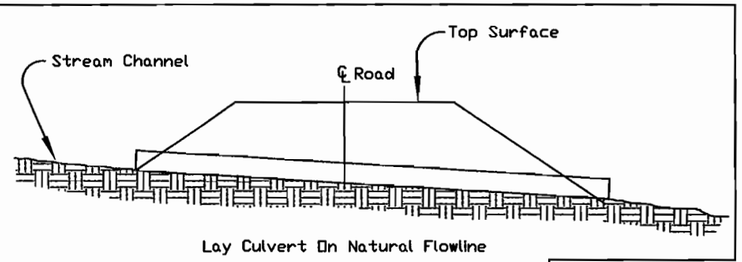

Lay Culvert On Natural Flowline

TYPICAL INSTALLATION IN STREAM CHANNEL

NO SCALE

CULVERT DETAILS

U.S. DEPARTMENT OF AGRICULTURE
FOREST SERVICE
R-1
NORTHERN REGION

Drawn Hawkes
Design
Checked
Reviewed

Forest Idaho Panhandle
Project Name TEMPLEMENTAL T.S.

Sheet Title Culvert Details
Sheet 6 of 9

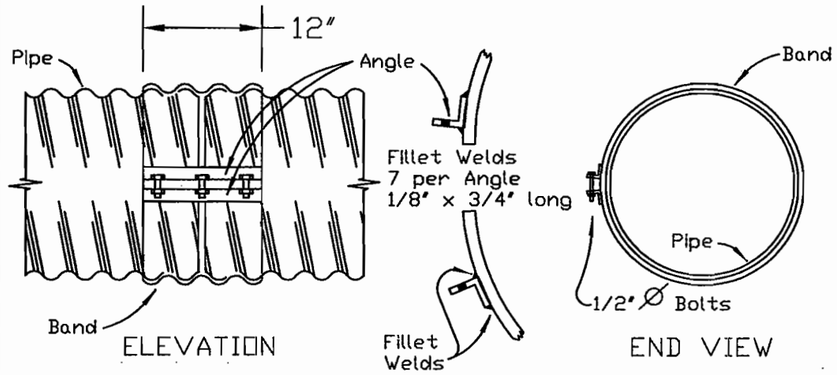

AMERICAN CULVERT BAND
FOR HELICALLY CORRUGATED STEEL PIPE

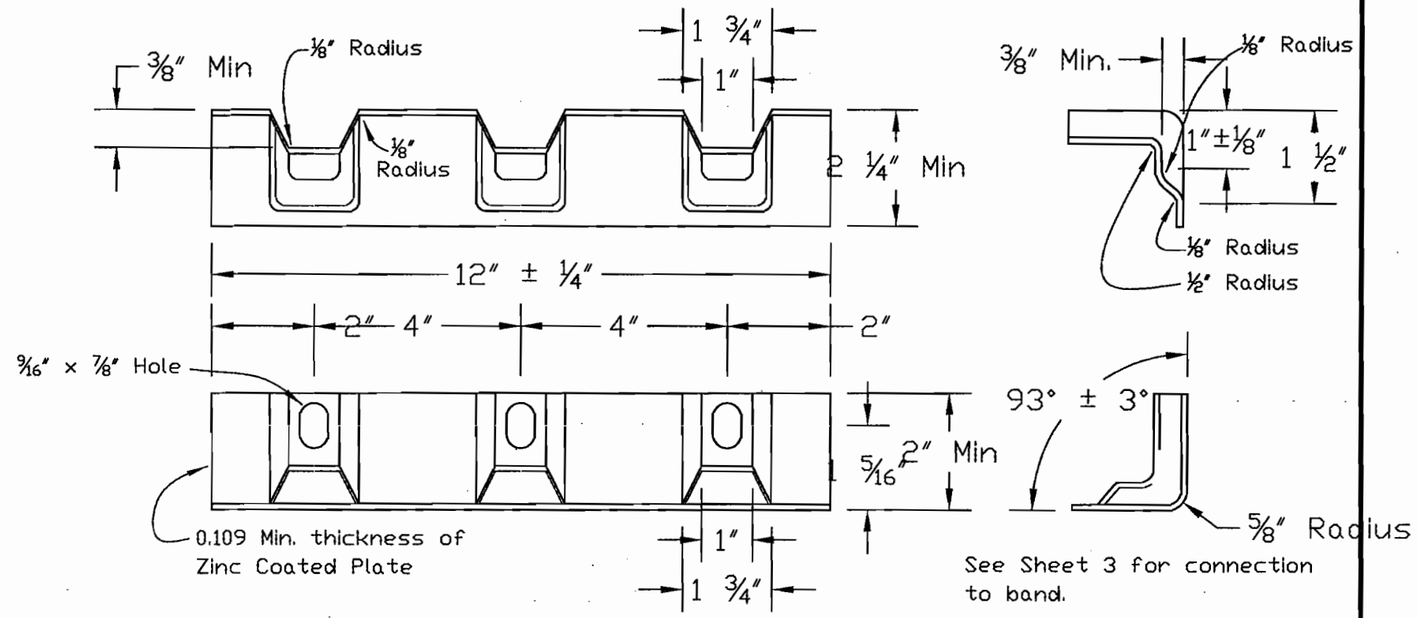

NORTHWEST CULVERT ANGLE ALTERNATIVE
FOR STEEL PIPE

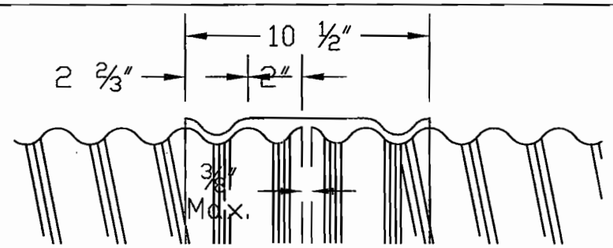

SECTION

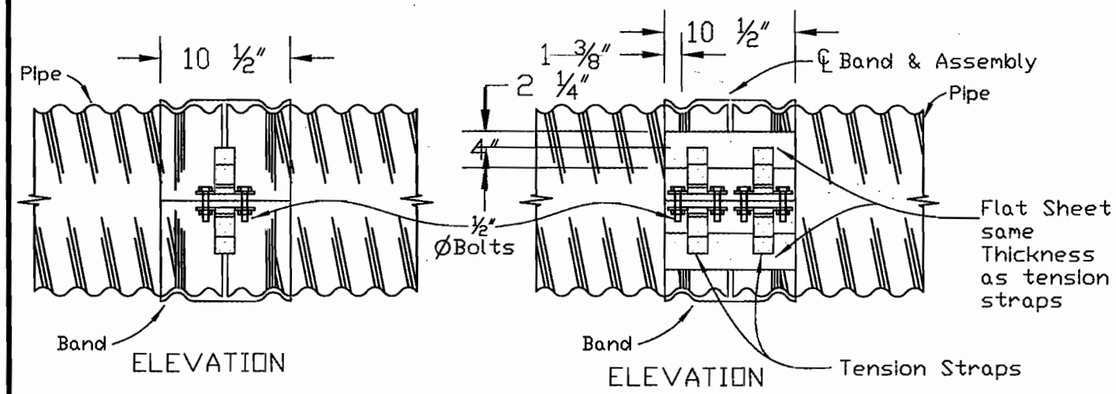

HUGGER COUPLING BAND
FOR REFORMED END HELICALLY CORRUGATED
WELDED SEAM STEEL PIPE

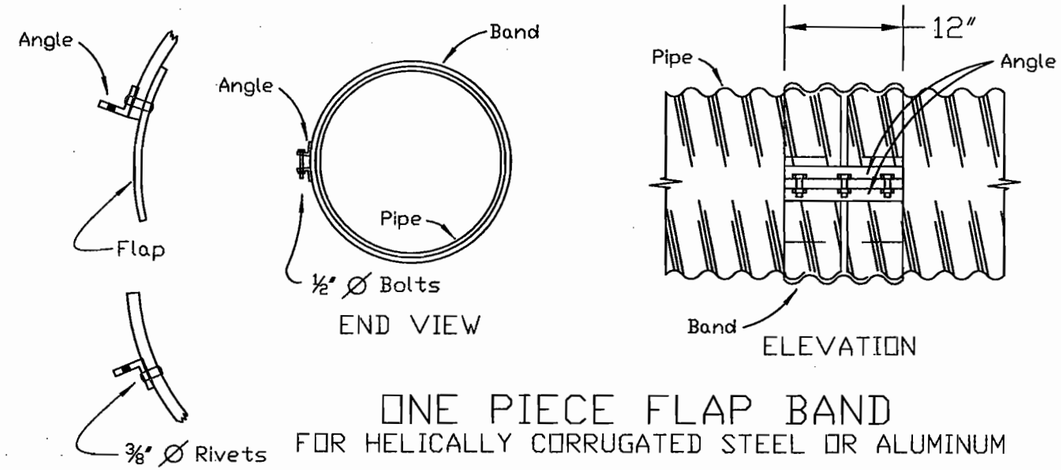

ONE PIECE FLAP BAND
FOR HELICALLY CORRUGATED STEEL OR ALUMINUM

COUPLING BAND DETAILS
FOR
CORRUGATED PIPE AND PIPE ARCH

U.S. DEPARTMENT OF AGRICULTURE
FOREST SERVICE
R-1
NORTHERN REGION

Drawn Hawkes
Design
Checked
Reviewed

Forest Idaho Panhandle
Project Name TEMPLEMENTAL T.S.

Sheet Title Coupling Bands 1
Sheet 7 of 9

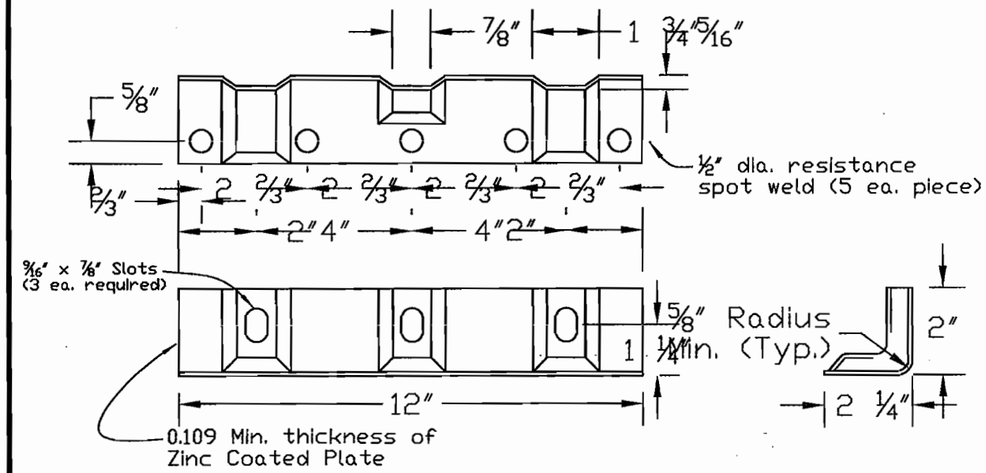

ALTERNATE FOR 2X2X3/16 ANGLE
FOR STEEL PIPE

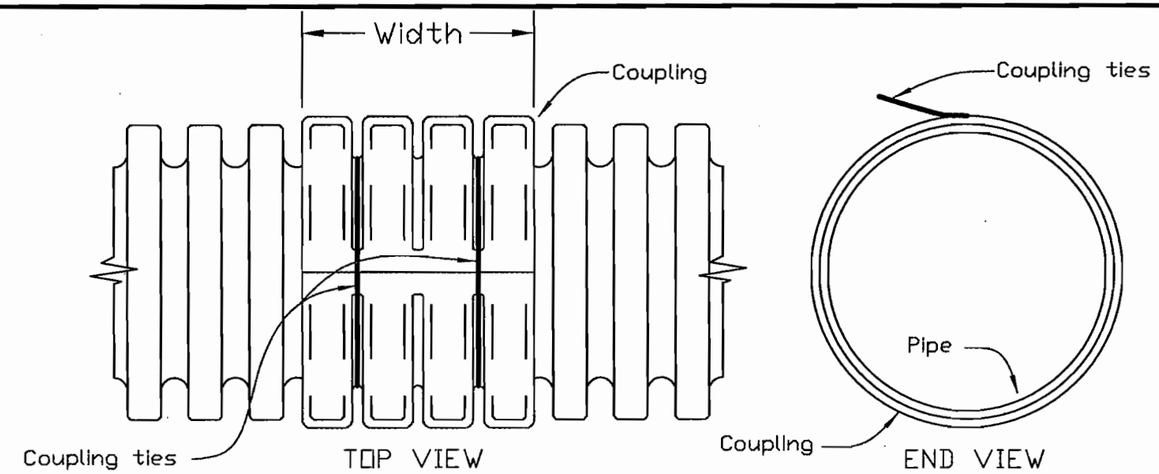

SPLIT COLLAR COUPLING
FOR ANNULAR CORRUGATED POLYETHYLENE PIPE

Notes:
1. Minimum width 4 corrugations, 2 on each culvert segment.
2. The opening of the coupling shall be within 15° of the top of the culvert.

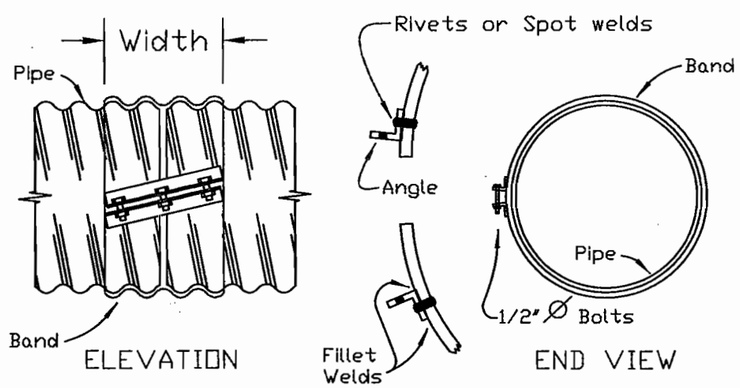

HELICAL COUPLING BAND
FOR HELICALLY CORRUGATED STEEL OR ALUMINUM PIPE

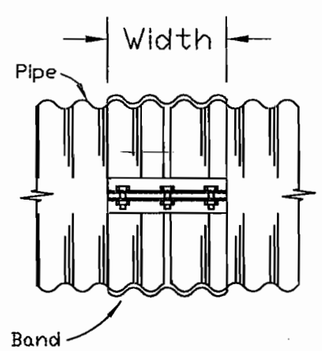

ANNULAR COUPLING BAND
FOR AUUNLAR OR REFORMED END HELICALLY CORRUGATED STEEL OR ALUMINUM PIPE

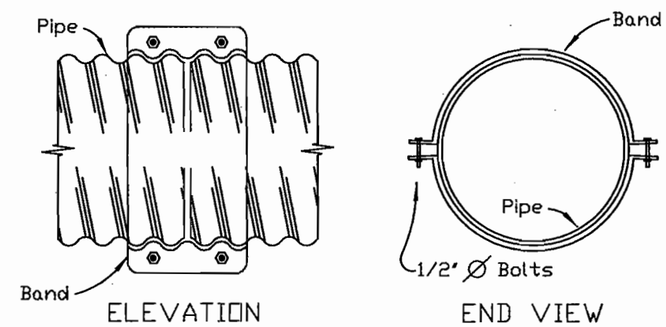

TWO PIECE INTEGRAL FLANGE
FOR HELICALLY CORRUGATED STEEL OR ALUMINUM PIPE

Notes:
1 Use 2x12x0.150 thickness 5052-H141 aluminum plate washer under bolt head & nut on aluminum pipe flange.
2. Use 2x12x0.125 thickness galvanized steel plate washer under bolt head & nut on steel pipe flange.

COUPLING BAND DETAILS FOR CORRUGATED PIPE AND PIPE ARCH

U.S. DEPARTMENT OF AGRICULTURE
FOREST SERVICE
R-1
NORTHERN REGION

Drawn Hawkes
Design
Checked
Reviewed

Forest: Idaho Panhandle
Project Name: TEMPLEMENTAL T.S.

Sheet Title: Coupling Bands 2
Sheet 8 of 9

COUPLING TYPE	CORRUGATION Inches	PIPE DIAMETER Inches	WIDTH Inches	SPECIFIED THICKNESS See Note 1-C Pipe Wall	SPECIFIED THICKNESS See Note 1-C Band	ANGLE - See Note 1-H DIMENSION	BOLTS NO / DIAMETER	ANGLE TO BAND RIVETS	ANGLE TO BAND SPOT WELDS
Metal Pipe Annular and Helical	2-2/3x1/2 (Steel or Aluminum)	Thru 36	12	0.064-0.138	0.064-0.079	2x2x3/16	3-1/2	3-3/8	5-1/2
		42-60	12	0.064-0.079	0.064	2x2x3/16	3-1/2	3-3/8	5-1/2
		42-60	12	0.064-0.168	0.064-0.109	2x2x5/16	3-1/2	5-3/8	
		66-84	24	0.109-0.168	0.064-0.109	2x2x5/16	5-1/2	7-3/8	
	3x1 and 5x1 (Steel Only)	36-60	14	0.064-0.079	0.064	2x2x3/16	3-1/2	3-3/8	5-1/2
		42-60	14	0.109	0.064	2x2x5/16	3-1/2	5-3/8	
		66-120	25	0.064-0.109	0.064	2x2x5/16	5-1/2	9-3/8	
One Piece Flap Band & Two Piece Integral Flange	2-2/3x1/2 (Steel or Aluminum) see Note 1-I	18-24	12	0.064-0.079	0.064		3-1/2	4-3/8*	* Flap Band Only
								WELDS ANGLE TO BAND	
American Culvert Band	2-2/3x1/2 (Steel Only)	Thru 24	12	0.064-0.109	0.064-0.079	2x2x0.183	3-1/2	7-1/8x3/4 Long Fillet	
		30-36	12	0.064-0.109	0.064	2x2x0.183	3-1/2		
		42-48	12	0.064-0.079	0.064	2x2x0.183	3-1/2		
Northwest Culvert Alternative	2-2/3x1/2 (Steel Only)	Thru 84	12	0.064-0.079	0.064-0.109			5-3/16x3/4 Long Fillet	
		Thru 54	12	0.109	0.064-0.109				
		Thru 42	12	0.138	0.064-0.109				
		Thru 84	12	0.064-0.168	0.064-0.109			5-1/2 Spot	
						BAR AND STRAP			
						NUMBER/ THICKNESS	BOLT DIAMETER	BAR DIAMETER	BAR YIELD STRENGTH P.S.I.
Hugger	2-2/3x1/2 (Steel Only)	Thru 48	10-1/2	0.064-0.109	0.064-0.109	One 0.079	1/2	7/8	32,000
		36-48	10-1/2	0.138-0.168	0.079-0.109	One 0.109	1/2	7/8	45,000
		54-60	10-1/2	0.079-0.168	0.064-0.109	Two 0.079	1/2	7/8	32,000
		66-84	10-1/2	0.109-0.168	0.109	Two 0.109	1/2	7/8	45,000
	3x1 (Steel Only)	36-66	10-1/2	0.064-0.109	0.064	Two 0.079	1/2	7/8	32,000
		72-84	10-1/2	0.109	0.079	Two 0.079	1/2	7/8	32,000
		61-120	10-1/2	0.109	0.109	Two 0.109	1/2	7/8	45,000
PE Pipe Split Collar		Thru 24	See Drawing	per AASHTO M-294	per AASHTO M-294				

GENERAL NOTES

1. Metal Coupling Bands

   A. These coupling bands meet the strength requirements for special Joint Types under Non-erodible Soil Conditions, Table 2.23.3 of AASHTO's "Standard Specifications for Highway Bridges".

   B. For pipe walls and bands, the Specified Thickness for steel is given. For aluminum, the Specified Thickness is tht for steel less the allowance for the zinc coating which is 0.003 to 0.004 of an inch per AASHTO M-36, M-196 and M-197.

   C. The minimum specified Thickness for bands is two Specified Thicknesses less than that for the pipe, but in no case thinner than 0.064 inches, (0.060 for aluminum).

   D. For pipe arches, use the same width band as for round pipe of equal periphery.

   E. A two-piece band is required for pipe greater than 42 inches in diameter.

   F. Tension straps may be connected to bands of plates with either spot or fillet welds that develop minimum required stregth of strap.

   G. For helically corrugated coupling bands, the connection angles may be oriented parallel to the pipe axis, provided connecting holes are slotted lenghtwise sufficiently to allow adjustment for the helix angle.

   H. Use 1 1/4 inch center to center gauge line dimension on attached angle leg for rivets and spot welds.

   I. The Two Piece Integral Flange coupling band shall not be used on pipe arches.

   J. Culvert bands shall be made of the same metal as the culverts being joined.

2. Polyethylene (PE) Couplings

   Testing standards for Corrugated Polyethylene (PE) Pipe couplings have not been established nor have couplings been tested for shear or bending moment. Therefore, until further information is available, PE couplings shall be used only where bending moment and shear requirements are minimal. Typical situations are:

   A. Where the slope of the culvert will not be more than 5%.

   B. Where the fill below the culvert is less than 2 feet.

   C. In areas of firm soils. This excludes marshes unless the bedding is specially designed and approved by the engineer.

3. Other

   Couplings other than those shown on this drawing may be used upon submission of testing data (see 1-A above) and approval by the Engineer.

COUPLING BAND DETAILS FOR CORRUGATED PIPE AND PIPE ARCH

U.S. DEPARTMENT OF AGRICULTURE
FOREST SERVICE
R-1
NORTHERN REGION

Drawn Hawkes
Design
Checked
Reviewed

Forest Idaho Panhandle
Project Name TEMPLEMENTAL T.S.

Sheet Title Coupling Bands 3
Sheet 9 of 9