Interagency Aviation
Safety Alert

Subject: Dart Aerospace Ltd Helicopter Seat 4-Point Harness

Area of Concern: All Helicopter Operations Using Dart 4-Point Harnesses

Distribution: All Helicopter Users

Discussion: On May 22, 2008, CAL FIRE issued SAFECOM 08-0239 which stated that during short-haul training, the rescue supervisor discovered his seatbelt had inadvertently released. Upon closer inspection, it was found that all seat belts in the crew area would release without the use of the lever release; all that was required was a twisting motion.

On June 2, 2008, Dart Aerospace issued service bulletin SB08-01on the DART 4-point shoulder harness. The service bulletin was issued as a result of inadvertent buckle releasing when "jiggled" back and forth. When released, the shoulder harness kit lap and shoulder belts separate.

On June 2, 2008, SAFECOM 08-0276 was issued by the state of Alaska - Division of Forestry. After reviewing the Dart Aerospace service bulletin, it was discovered that two of the five Bell 212 helicopters equipped with the Dart shoulder harness kit had buckles that would release when "jiggled" back and forth.

According to the Dart Aerospace SB08-01, Revision A, if the batch number stamped on the joggle part of the release is anything other than SSP0407 or SSP0408, the belt is UNAIRWORTHY and must be removed from the aircraft immediately. Revision A is attached to this Bulletin.

On June 6, 2008, Dart Aerospace Ltd issued Revision B to the original seat belt bulletin. This could possibly make replacement belts recently received by operators and State agencies "UNAIRWORTHY". Revision B is attached to this Bulletin.

Recommendations: Review the attached DART Service Bulletins and inspect all DART harness assemblies to ensure that they are in compliance. If the buckles are not labeled with the correct serial number, they must be removed from service immediately.

Questions should be forwarded to your Region Maintenance Officer or contact the local DOI NBC AMD Technical Services Office for assistance.

/s/ Robert Galloway

Robert Galloway

Aviation Safety Manager

/s/ Ron Hanks

Ron Hanks

Chief, Aviation Risk Management and Training Systems

REVISION A

DART SERVICE BULLETIN

Affecting:

D412-702-021 / D412-702-023 / D412-702-025 / D412-702-027 / D412-702-029 / D412-702-031 / D412-702-033 / D214-702-035 Shoulder Harness Kits (4 Point Metal to Metal)

REF. CANADIAN STC: SH04-7
REF. FAA STC: SR01997NY
REF. EASA STC: IM.R.S.00710

Dart Aerospace Ltd. has received information that indicates that under certain circumstances, the lever-type buckle included in the 4 Point Metal to Metal Shoulder Harness Kits (part numbers D412-702-021/-023/-025/-027/-029/-031/-033/D214-702-035) may become unlatched without the manual release of the buckle lever, causing the shoulder harness kit lap and shoulder belts to separate.

The following inspection must be conducted PRIOR TO NEXT FLIGHT. If aircraft and/or kit ownership has changed since purchase, please forward this bulletin to new owner IMMEDIATELY.

1) Inspect the SSP code stamped on the latching plate (see Photo 1 below) of p/n D3446-041/-043/-045 and D3496-041 shoulder harness assemblies. If the SSP code is "SSP1006" or "SSP1406" or "SSP3005" or "SSP1105", the buckle portion of the harness (p/n D3446-1/-11/-21 or D3496-7, refer to Figure 25.9 of ICA-D412-702 Rev. 3 or sheet 3 of this service bulletin) must IMMEDIATELY be removed from the aircraft and RETURNED TO DART AEROSPACE LTD.

Photo 1: SSP number on the Buckle Latching Plate

REV.	DESCRIPTION	BY	DATE
A	NEW ISSUE	HS	08.05.28

DESIGN	SW	DART AEROSPACE LTD HAWKESBURY, ONTARIO, CANADA
DRAWN	HS	
CHECKED	DS	DRAWING NO. SB08-1 REV. A
MFG. APPR.	N/A	SHEET 1 OF 3
APPROVED		TITLE SERVICE BULLETIN SCALE NTS
DE APPR.		
DATE	08.05.28	

COPYRIGHT © 2008 BY DART AEROSPACE LTD
THIS DOCUMENT IS PRIVATE AND CONFIDENTIAL AND IS SUPPLIED ON THE EXPRESS CONDITION THAT IT IS NOT TO BE USED FOR ANY PURPOSE OR COPIED OR COMMUNICATED TO ANY OTHER PERSON WITHOUT WRITTEN PERMISSION FROM DART AEROSPACE LTD.

DART SERVICE BULLETIN

Affecting:
D412-702-021 / D412-702-023 / D412-702-025 / D412-702-027 / D412-702-029 / D412-702-031 / D412-702-033 / D214-702-035 Shoulder Harness Kits (4 Point Metal to Metal)

REF. CANADIAN STC: SH04-7
REF. FAA STC: SR01997NY
REF. EASA STC: IM.R.S.00710

2) If the SSP code is other than "SSP1006" or "SSP1406" or "SSP3005" or "SSP1105", verify that the joggle measurement on the latching plate inside the buckle is greater than 0.210" as shown in Photo 2 below. Any buckle assembly (p/n D3446-1/-11/-21 or D3496-7) with a joggle measurement less than 0.210" must IMMEDIATELY be removed from the aircraft and RETURNED TO DART AEROSPACE LTD.

Photo 2: Measurement of Buckle Latch Plate Joggle

3) Record the results of this inspection and the corrective action taken (if any) in the technical records of the aircraft, and report results to Dart Aerospace Ltd.

4) Replacement D3446-1/-11/-21 and D3496-7 buckle assemblies (refer to Figure 25.9 of ICA-D412-702 Rev. 3) are available from Dart Aerospace Ltd AT NO CHARGE. Contact Sian Willems @ 613-632-5200 or by email @ swillems@dartaero.com referencing this Service Bulletin.

5) For return authorization and instructions, contact Sian Willems @ 613-632-5200 or by email @ swillems@dartaero.com referencing this Service Bulletin.

6) In order to minimize the impact of this situation on our customers, Dart Aerospace Ltd. will be shipping replacement buckle assemblies. Please note that buckle assemblies labeled "D3446-041", "D3446-043", "D3446-045" and "D3496-041" are all functionally identical and interchangeable. For shipments received as a result of service bulletin SB08-1, it is acceptable to install buckle assemblies whose identification tag does not match the rest of the existing shoulder harness kit in the aircraft.

Dart Aerospace Ltd. regrets any inconvenience this may cause.

DESIGN	SW	**DART AEROSPACE LTD** HAWKESBURY, ONTARIO, CANADA
DRAWN	HS	
CHECKED	DS	DRAWING NO. SB08-1 REV. A SHEET 2 OF 3
MFG. APPR.	N/A	
APPROVED		TITLE SERVICE BULLETIN SCALE NTS
DE APPR.		
DATE	08.05.28	

COPYRIGHT © 2008 BY DART AEROSPACE LTD
THIS DOCUMENT IS PRIVATE AND CONFIDENTIAL AND IS SUPPLIED ON THE EXPRESS CONDITION THAT IT IS NOT TO BE USED FOR ANY PURPOSE OR COPIED OR COMMUNICATED TO ANY OTHER PERSON WITHOUT WRITTEN PERMISSION FROM DART AEROSPACE LTD.

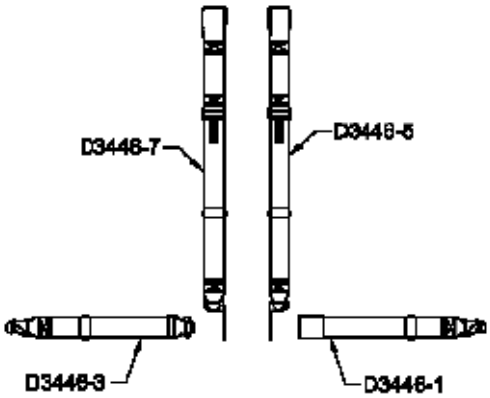

FIGURE 25.9A, D3446-041
SHOULDER HARNESS
(INCLUDED IN D412-702-021/
-023/-027/-029 KITS)

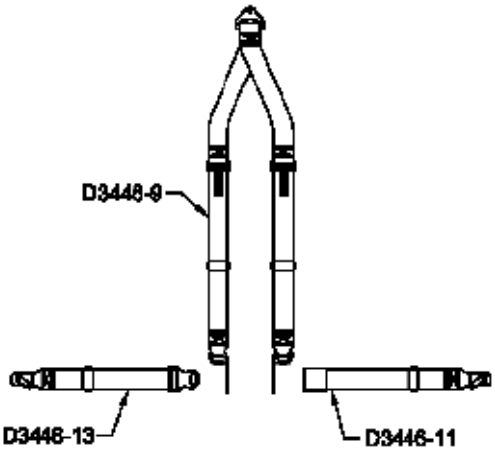

FIGURE 25.9B, D3446-043
SHOULDER HARNESS
(INCLUDED IN D412-702-021/
-025 KITS)

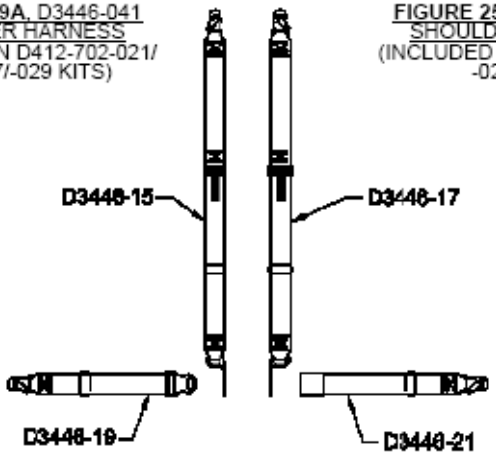

FIGURE 25.9C, D3446-045 SHOULDER HARNESS
(INCLUDED IN D412-702-035 KITS)

DESIGN	SW	DART AEROSPACE LTD HAWKESBURY, ONTARIO, CANADA
DRAWN	HS	
CHECKED	DS	DRAWING NO. SB08-1 REV. A
MFG. APPR.	N/A	SHEET 3 OF 3
APPROVED		TITLE SERVICE BULLETIN SCALE NTS
DE APPR.		
DATE	08.05.28	

COPYRIGHT © 2008 BY DART AEROSPACE LTD
THIS DOCUMENT IS PRIVATE AND CONFIDENTIAL AND IS SUPPLIED ON THE EXPRESS CONDITION THAT IT IS NOT TO BE USED FOR ANY PURPOSE OR COPIED OR COMMUNICATED TO ANY OTHER PERSON WITHOUT WRITTEN PERMISSION FROM DART AEROSPACE LTD.

REVISION B

DART SERVICE BULLETIN SB08-1

Affecting:
D412-702-021 / D412-702-023 / D412-702-025 / D412-702-027 / D412-702-029 / D412-702-031 / D412-702-033 / D214-702-035 Shoulder Harness Kits (4 Point Metal to Metal)

REF. CANADIAN STC: SH04-7
REF. FAA STC: SR01997NY
REF. EASA STC: IM.R.S.00710

BASED ON FURTHER INVESTIGATION BY THE HARNESS MANUFACTURER, CUSTOMERS WHO HAVE RECEIVED SB08-1 "DRAFT" AND/OR SB08-1 REV A, MUST ENSURE THAT THEIR KITS COMPLY WITH SB08-1 REV B.

Dart Aerospace Ltd. has received information that indicates that under certain circumstances, the lever-type buckle included in the 4 Point Metal to Metal Shoulder Harness Kits (part numbers D412-702-021/-023/-025/-027/-029/-031/-033/D214-702-035) may become unlatched without the manual release of the buckle lever, causing the shoulder harness kit lap and shoulder belts to separate.

The following inspection must be conducted PRIOR TO NEXT FLIGHT. If aircraft and/or kit ownership has changed since purchase, please forward this bulletin to new owner IMMEDIATELY.

1) Inspect the SSP code stamped on the latching plate (see Photo 1 below) of p/n D3446-041/-043/-045 and D3496-041 shoulder harness assemblies. The SSP code should end with either the digits "07" or "08", ie: "SSP04*08*". If the SSP code is anything other than "SSPxx07" or "SSPxx08", the buckle portion of the harness (p/n D3446-1/-11/-21 or D3496-7, refer to Figure 25.9 of ICA-D412-702 Rev. 3 or sheet 3 of this service bulletin) must IMMEDIATELY be removed from the aircraft and RETURNED TO DART AEROSPACE LTD.

Photo 1: SSP number on the Buckle Latching Plate

REV.	DESCRIPTION	BY	DATE
B	REVISED NOTE 1 TO CHANGE "SSP" CODE CRITERIA. DELETED NOTES 2 AND 3. DELETED PHOTO 2.	MP	08.06.04
A	NEW ISSUE	HS	08.05.28

DESIGN	SW	DART AEROSPACE LTD HAWKESBURY, ONTARIO, CANADA
DRAWN	HS	
CHECKED	DS	DRAWING NO. SB08-1 REV. B SHEET 1 OF 3
MFG. APPR.	N/A	
APPROVED		TITLE SERVICE BULLETIN SCALE NTS
DE APPR.		
DATE	08.06.04	

COPYRIGHT © 2008 BY DART AEROSPACE LTD
THIS DOCUMENT IS PRIVATE AND CONFIDENTIAL AND IS SUPPLIED ON THE EXPRESS CONDITION THAT IT IS NOT TO BE USED FOR ANY PURPOSE OR COPIED OR COMMUNICATED TO ANY OTHER PERSON WITHOUT WRITTEN PERMISSION FROM DART AEROSPACE LTD.

DART SERVICE BULLETIN SB08-1

Affecting:

D412-702-021 / D412-702-023 / D412-702-025 / D412-702-027 / D412-702-029 / D412-702-031 / D412-702-033 / D214-702-035 Shoulder Harness Kits (4 Point Metal to Metal)

REF. CANADIAN STC: SH04-7
REF. FAA STC: SR01997NY
REF. EASA STC: IM.R.S.00710

2) Deleted

3) Deleted

4) Replacement D3446-1/-11/-21 and D3496-7 buckle assemblies (refer to Figure 25.9 of ICA-D412-702 Rev. 3) are available from Dart Aerospace Ltd AT NO CHARGE. Contact Sian Willems @ 613-632-5200 or by email @ swillems@dartaero.com referencing this Service Bulletin.

5) For return authorization and instructions, contact Sian Willems @ 613-632-5200 or by email @ swillems@dartaero.com referencing this Service Bulletin.

6) In order to minimize the impact of this situation on our customers, Dart Aerospace Ltd. will be shipping replacement buckle assemblies. Please note that buckle assemblies labeled "D3446-041", "D3446-043", "D3446-045" and "D3496-041" are all functionally identical and interchangeable. For shipments received as a result of service bulletin SB08-1, it is acceptable to install buckle assemblies whose identification tag does not match the rest of the existing shoulder harness kit in the aircraft.

Dart Aerospace Ltd. regrets any inconvenience this may cause.

DESIGN	SW	DART AEROSPACE LTD HAWKESBURY, ONTARIO, CANADA
DRAWN	HS	
CHECKED	DS	DRAWING NO. SB08-1 REV. B
MFG. APPR.	N/A	SHEET 2 OF 3
APPROVED		TITLE SERVICE BULLETIN SCALE NTS
DE APPR.		
DATE	08.06.04	COPYRIGHT © 2008 BY DART AEROSPACE LTD THIS DOCUMENT IS PRIVATE AND CONFIDENTIAL AND IS SUPPLIED ON THE EXPRESS CONDITION THAT IT IS NOT TO BE USED FOR ANY PURPOSE OR COPIED OR COMMUNICATED TO ANY OTHER PERSON WITHOUT WRITTEN PERMISSION FROM DART AEROSPACE LTD.

DART SERVICE BULLETIN SB08-1

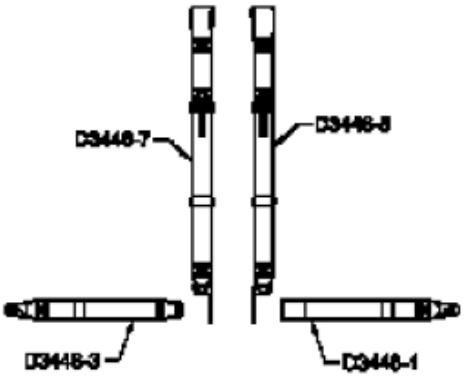

FIGURE 25.9A, D3446-041
SHOULDER HARNESS
(INCLUDED IN D412-702-021/
-023/-027/-029 KITS)

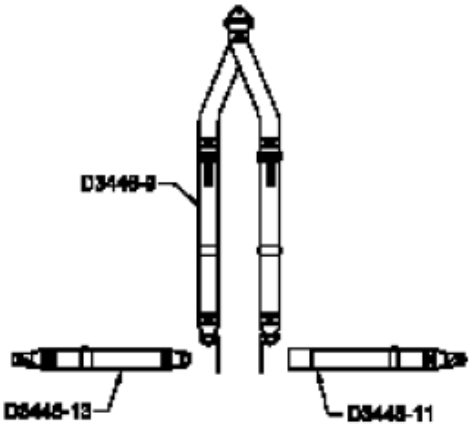

FIGURE 25.9B, D3446-043
SHOULDER HARNESS
(INCLUDED IN D412-702-021/
-025 KITS)

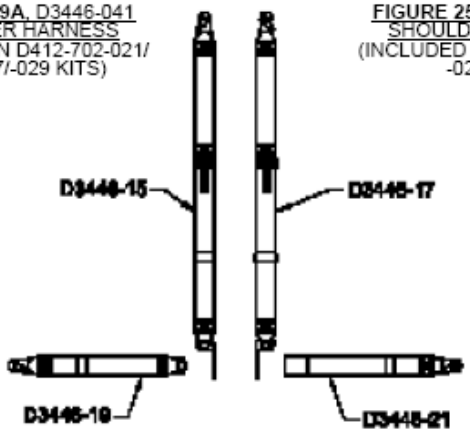

FIGURE 25.9C, D3446-045 SHOULDER HARNESS
(INCLUDED IN D412-702-035 KITS)

DESIGN	SW	DART AEROSPACE LTD HAWKESBURY, ONTARIO, CANADA
DRAWN	HS	
CHECKED	DS	DRAWING NO. SB08-1 REV. B
MFG. APPR.	N/A	SHEET 3 OF 3
APPROVED		TITLE SERVICE BULLETIN SCALE NTS
DE APPR.		
DATE	08.06.04	COPYRIGHT © 2008 BY DART AEROSPACE LTD THIS DOCUMENT IS PRIVATE AND CONFIDENTIAL AND IS SUPPLIED ON THE EXPRESS CONDITION THAT IT IS NOT TO BE USED FOR ANY PURPOSE OR COPIED OR COMMUNICATED TO ANY OTHER PERSON WITHOUT WRITTEN PERMISSION FROM DART AEROSPACE LTD.