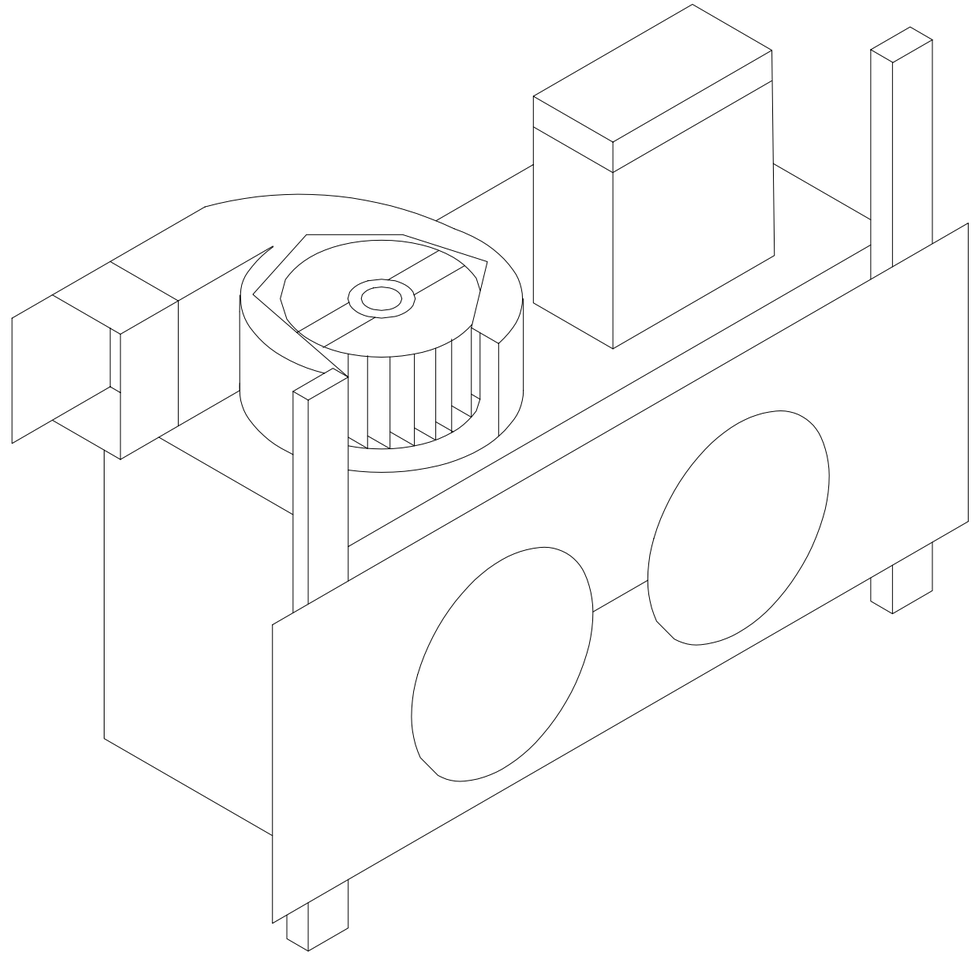

INFRA-RED RADIANT HEATER AND VENT FAN

CEILING HEATER/FAN UNIT SHALL BE EQUIPPED WITH HANGER BARS FOR RECESSED MOUNTING IN 14" STUD SPACE. FURNISH REMOTE THERMOSTAT AND SWITCH FOR SEPARATE OPERATION OF HEAT LAMPS, EXHAUST, OR HEAT LAMPS AND EXHAUST. FAN SHALL HAVE MINIMUM 55 C.F.M. OUTPUT. FURNISH ROOF CAP OR WALL CAP AND AUTOMATIC BACKDRAFT DAMPER. FINISH SHALL BE ANODIZED OR BAKED ENAMEL. HEATER SHALL BE 120 VOLT, SINGLE PHASE.

LAMP 2 - 250W R-40 REFLECTOR INFRA-RED

E-35
12-28-88